1

2

3

4

5

6

CATALOGUE
INDOORS

Sliding doors

Hinged doors

Partition walls

logli
SAINT-GOBAIN

FINISHES

/1
Chrome

/2
Gold

/3
Brushed nickel

/4
Bronze

/5
White

/6
Matt black

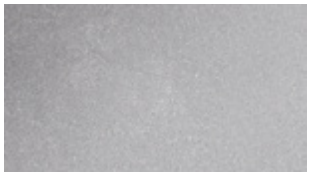

/7
Matt chrome

/8
Brushed steel

/9
Machining steel (CNC)

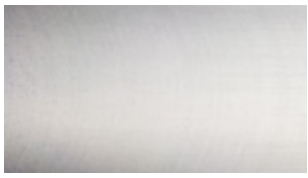

/10
Raw aluminium

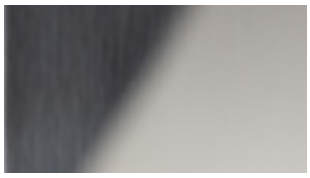

/15
Polished steel

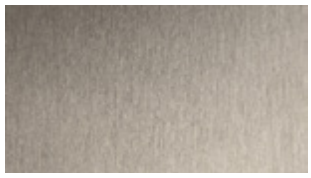

/24
Brushed steel effect

/45
Matt aluminium effect

/56
Grey

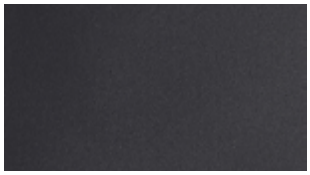

/65
Matt black

/66
Champagne aluminium

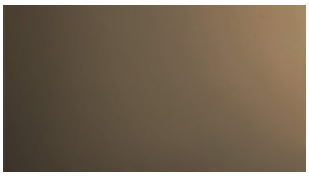

/67
Dark brushed bronze aluminium

/83
PVD brushed steel

/88
Brushed steel effect aluminium

/89
Galvanised iron

/90
Machining aluminium

/91
Polished aluminium

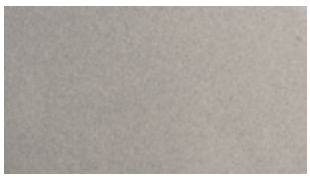

/92
Matt nickel

/93
Brass coated

/94
Brushed chrome

/95
Nickel-coated

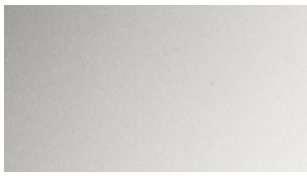

/97
Matt aluminium

/99
Brushed gold

/R2
RAL9005 matt black

/R6
RAL9016 matt traffic white

/R13
RAL7016
matt anthracite grey

/R25
RAL Rubigo

/RAL
RAL9010 polished white

CATALOGUE
INDOORS

ALUMINIUM SYSTEMS FOR SLIDING DOORS Page 19

STEEL SYSTEMS FOR SLIDING DOORS Page 325

SYSTEMS FOR GLASS PARTITION WALLS Page 389

SYSTEMS FOR HINGED DOORS Page 457

HANDLES AND DOOR KNOBS Page 563

logli
SAINT-GOBAIN

SINCE 1989

INNOVATION SERVING DESIGN FOR MORE THAN 35 YEARS

Since 1989 we are committed to satisfying the needs of glassworks, installers, and designers, offering advanced solutions that guarantee the utmost comfort. Our mission is to provide high-tech, long-lasting, reliable, high-quality products designed to exceed the expectations of every customer.

INNOVATION AND RESEARCH

OUR TECHNOLOGICAL APPROACH

Thanks to our laboratory and a team of specialised engineers, we are able to design and develop custom solutions for glassworks, installers, and interior designers. Our highly qualified personnel provide constant customer support through technical consultation and training courses.

Active collaboration with universities and national and international research institutes such as TÜV, the Politecnico di Milano, CSTB (France), and LSL (Germany) guarantee access to specialized skill and equipment when verifying systems such as balustrades, canopies, doors, and glass partitions. This enables the highest quickness and efficiency in developing new products and supporting customers with ad hoc laboratory tests.

AVIS TECHNIQUE CCFAT

ABP Allgemeines bauaufsichtliches Prüfzeugnis

British Standard 6180:2011

UNI 11678:2017

NTC 2018

NBN B 03-004

★★★ EUROPEAN EURASEWAA Qualanod ALUMINIUM ASSOCIATION ANODISERS ASSOCIATION

TÜVRheinland CERTIFIED Type Approved Safety Regular Production Surveillance www.tuv.com ID 1111292548

• TEST REPORT • Politecnico di Milano

GINGER CEBTP

LUCIDEON

Certificates and testing reports apply to selected products depending on the type and intended use.

THE WAREHOUSE AND WORKSHOP

EFFICIENCY, WIDE PRODUCT RANGE, AND IMMEDIATE AVAILABILITY

The unique features that makes the Logli brand stand out on the market include facility, personnel, product, and especially the service. With more than 7000 items in stock, we guarantee immediate availability not only of the simplest accessories, but also the most complex systems. Through important investments in four automated vertical warehouses and advanced logistics management, we guarantee order shipments in Italy within 24 hours and quick and prompt delivery.

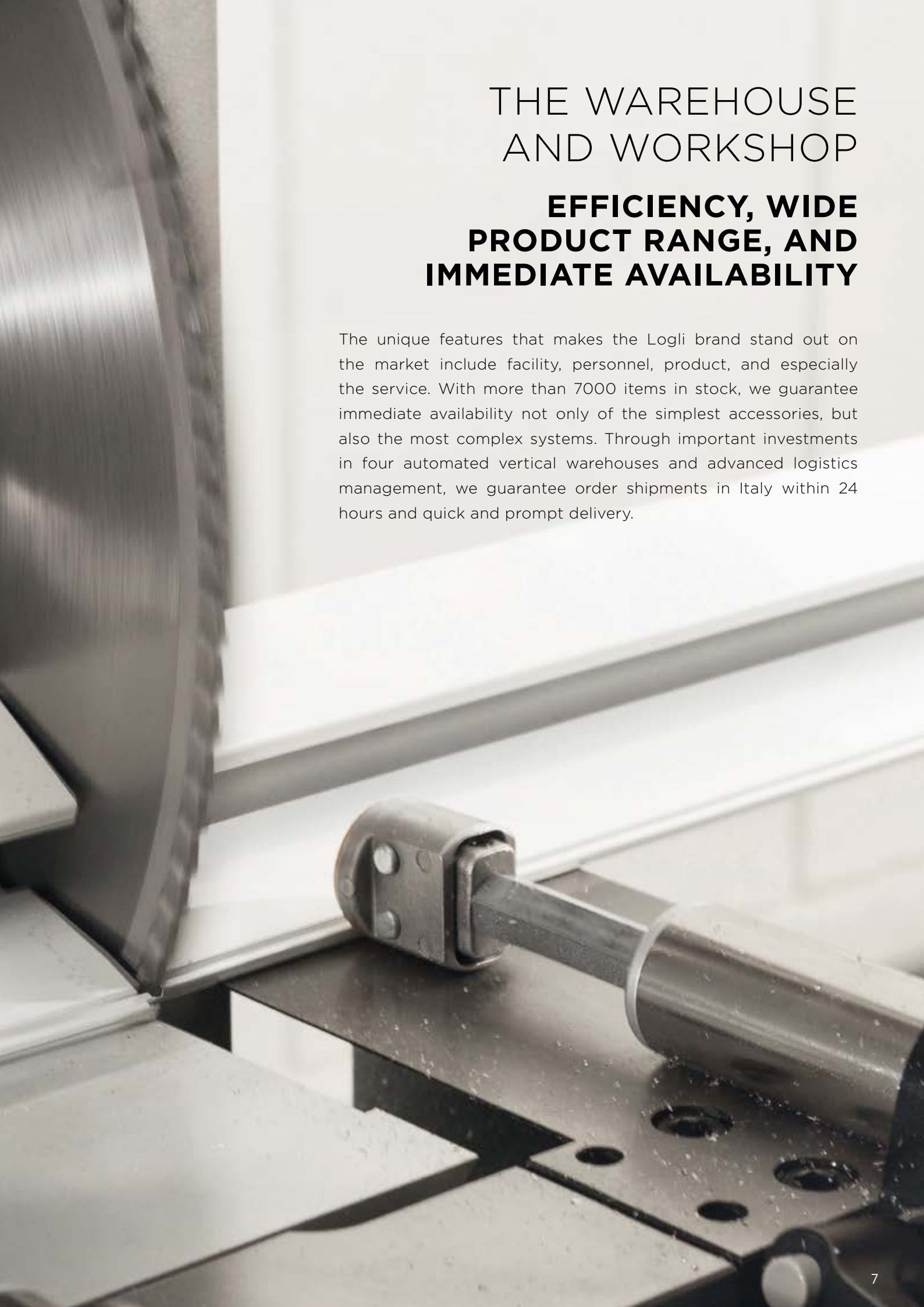

THE EXPERIENCE AND RESEARCH **OF A WORLD LEADER**

The 16th of March 2018 marks a crucial moment in our history: joining the prestigious Saint-Gobain Group, a multinational company with a history of over 360 years in design of solutions for sustainable construction. This important step is a clear recognition of the excellence achieved by the company in the field of technological glass solutions.

Future innovation may rely on synergy with other brands in the Group, giving rise to increasingly advanced technological solutions.
The culture of Saint-Gobain, which we have made our own, is based on a set of values expressed in the Behaviour and Conduct Principles: respect for people, law, environment, health, and workplace safety are some of the premises that guide the Group's action and its constant aspiration to become a leader in sustainable construction.

SAINT-GOBAIN | logli SAINT-GOBAIN

It designs, produces, and distributes materials for safety and comfort that are in all living spaces: Buildings, transport, infrastructure, and many industrial applications.

80 countries

100 One of the TOP 100 innovative companies in the world

161,000 employees

400 patents registered each year

€46.6 billion total turnover 2024

€450 million R&D investments last year

With 360 years behind it, the Group offers next-generation materials and integrated solutions to make 'living spaces' more comfortable and sustainable, contributing to the well-being of people and protecting the planet while situating itself as a global point of reference in the efficient use of natural resources with respect for the environment.

In **Italy**, Saint-Gobain is present in the fields of construction materials, transport and industry.

Approximately **2,100** employees

€1,1 billion turnover 2024

42 sites

CONSTRUCTION

Next-generation materials produced for 90% in our country, designed to create excellent living spaces and improve the quality of daily life through solutions created to build more energy-efficient buildings and reduce consumption and pollutant emissions.

TRANSPORT

Production and worldwide distribution **of glass for the automotive, aerospace, rail, naval sectors**, and **industrial vehicles.**

INDUSTRY

A wide range of solutions: **abrasives and ceramic products** for glass furnaces and steelworks, **technical adhesive tapes** that constitute a unique high-performance range, **and chemical or special construction products.**

SUSTAINABILITY FOR SAINT-GOBAIN:
A GROUP STRATEGY

In 2020, the Saint-Gobain Group declared its corporate purpose: *'Making the world a better home'.* Its ambition is to improve the life of everyone, making the planet a more equitable and sustainable place to live, which is also open and inclusive. Together with and for our customers, **we design materials and solutions that guarantee well-being, living comfort, and safety, while taking care to protect the planet**.
Our corporate purpose is a call to action, a strategy aimed at the future that encourages innovation while respecting the union between humanity and nature.

Saint-Gobain **aims to be recognized as a world leader in sustainable building**, improving the daily life of all those using its products. **This commitment not only regards our operations and processes, but also marketing solutions that actively contribute to reaching the decarbonisation objectives of the sector**.

Being a leader means promoting a systemic transformation, embracing values, commitments, and actions that guide the change, becoming a point of reference for all stakeholders.
The geographical organization of the Group can offer custom solutions for the specific needs of local markets in terms of construction methods or styles, building systems, and different climate characteristics, both in renovation of existing buildings and in new construction.

MAKING THE WORLD A BETTER HOME

BETTER FOR THE PEOPLE, BETTER FOR THE PLANET

Like Saint-Gobain, we embrace our social and environmental responsibility as an opportunity to create value together with our stakeholders. In fact, by creating mutual trusting relationships, we believe we can increase awareness about issues of sustainability and create virtuous cycles for the long-term business path.

BETTER FOR THE PEOPLE

For employees, collaborators, suppliers, and partners, this means expanding the 'company culture' through solid governance, **attention for health and safety, constant training, and the creation of an inclusive working environment**.
For local communities, we are dedicated to supporting **solidarity initiatives through the Saint-Gobain Foundation** and we support young talent by promoting the **Architecture Student Contest**, an annual competition dedicated to students of architecture and construction engineering around the world.

BETTER FOR THE PLANET

More than other sector, construction can influence the future of the planet, so **buildings and sustainability represent an unavoidable combination**.
Our production impacts the environment in terms of emissions, energy consumption, water use, and natural resources. The value of the Group consists of **products and sustainable and efficient production methods, designed to minimise environmental impacts** in manufacturing processes and engineered to **maximise performance** during the entire life cycle of the buildings, contributing significantly to the objectives of decarbonisation and circularity in the industry. Saint-Gobain Italia is ISO 14001:2015 and ISO 9001:2015 certified.

OUR COMMITMENT TO THE ENVIRONMENT

Contributions that our materials may bring to different sustainability certifications.

Reducing energy consumption and pollulant emission is one of the main objectives of Saint-Gobain, which develops, produces, and distributes innovative solutions to create more energy-efficient buildings.
The development of a **passive envelope**, which contributes to energy retention, is the most economically sustainable solution for making buildings more efficient.

Many of our products contain recycled materials. We are constantly dedicated to increasing recycled content, contributing to reducing the consumption of raw materials and environmental impacts tied to their life cycle.

The Saint-Gobain Group has developed different projects that aim to **enhance waste**, decrease energy consumption, and use less raw material.

The Life Cycle Assessment (LCA) is very important. This study assess the material and energy flows associated with the different stages in the life of a product (extraction of raw materials, production, use, final disposal). The goal of the assessment is to analyse the impacts associated with the different phases in the life of the product in order to optimise production processes with respect to environmental sustainability.

Closely connected to the Life Cycle Assessment is EPD® (Environmental Product Declaration) Certification. The purpose of this is to convey environmental information deriving from the LCA in a format and based on predefined common rules, the PCR (Product Category Rules). Many products manufactured by the Saint-Gobain Group carry this certification.

The extensive presence of Saint-Gobain in Italy, with production units and logistics centres around the country, limits road transport and thus pollution, favouring the **spread of local materials**.

In promoting a responsible and conscious environmental attitude, Saint-Gobain has decided to become a member of the GBC Italia association.

STANDARDS OF ENVIRONMENTAL SUSTAINABILITY

The **LEED V4.1** standard, which supports the existing LEED v4 standard, is based on a system of prerequisites and credits for design, construction, and management of buildings and sustainable areas.

The **BREEAM** (Building Research Establishment Environmental Assessment Method) system is based on verifying design, construction, and use of the building.

The purpose of the **WELL** protocol is to integrate aspects connected to personal health and well-being in building project design and construction.

With the enactment of the new Contract Code in Italy, **CAM** were updated with Italian Ministerial Decree 23 June 2022 on the assignment of design services and work on new constructions, restorations, and maintenance of public buildings.

logli
SAINT-GOBAIN

2024 COLLECTION

6 VOLUMES
1750 PAGES

The first series consisting of 6 volumes that covers the entire range of glass solutions designed by Logli. The collection is designed to provide a complete, detailed overview of all the articles offered by Logli.
Each volume deals extensively with a specific product series, offering technical information combined with practical applications.

It is the ideal compendium for those looking for high-quality glass solutions.

All volumes are available for download by scanning the QR code.

All **Logli solutions** in a **single** place.

Volume **1**
BALUSTRADES

Volume **2**
OUTDOORS

Volume **3**
INDOORS

Volume **4**
SHOWERS

Volume **5**
ARRANGEMENT

Volume **6**
ACCESSORIES FOR GLASSWORKS

CATALOGO
PARAPETTI
Profili DEFENDER
Fissaggi puntuali
Montanti
Corrimano
logli
logli
SAINT-GOBAIN

ALUMINIUM SYSTEMS FOR SLIDING DOORS

DOOR PANELS
WITH STRUCTURAL FRAMES

LM INTELAIATO
Page 20

FULL GLASS DOOR PANELS

LM PORTA PRO
Page 82

LM VETRO
Page 126

LM INVISIBLE
Page 216

DOOR PANELS FOR WALK-IN
WARDROBES

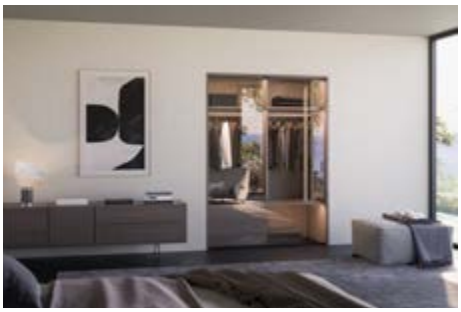

LM CLIPO
Page 262

LM INTELAIATO

Design

The LM INTELAIATO collection is the new system of aluminium sliding doors from Logli.
It can accommodate 8 mm monolithic panes of glass or 4 + 4 mm laminate glass, surrounded by a structural aluminium frame.

The system is highly versatile, meaning that this product family is well suited for a wide array of architectural requirements within the home.

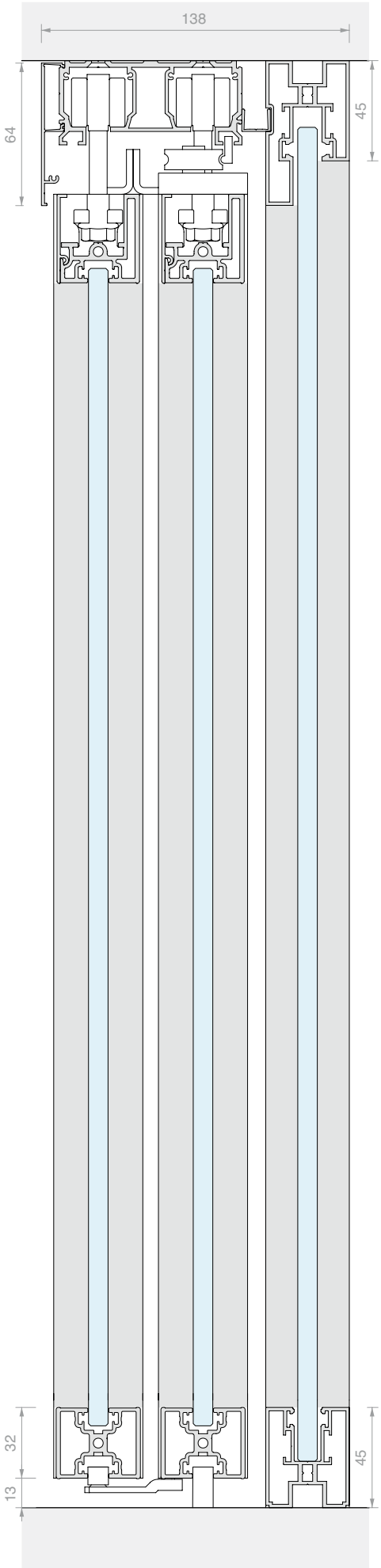

/6
Matt black

/88
Brushed steel effect aluminium

/97
Matt aluminium

LM INTELAIATO

Technical properties

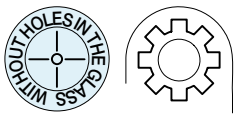

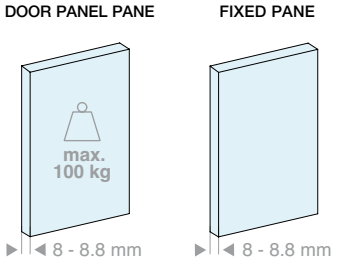

2 types of installation

Ceiling

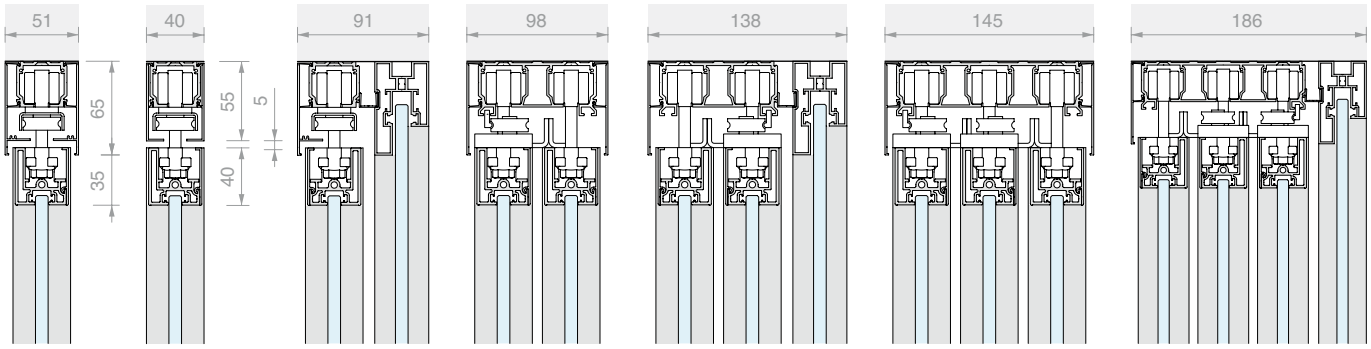

1 way | 1 way + fixed | 2-way | 2 way + fixed | 3-way | 3 way + fixed

Wall

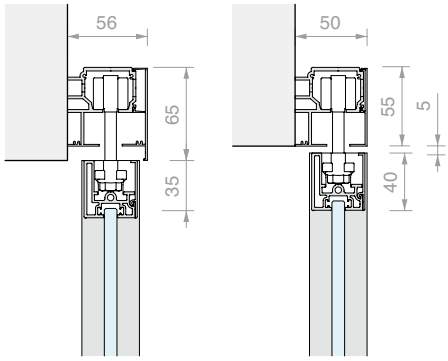

1 way

2 types of upper cover

cover on top of the door panel h = 65 mm
The kits in the catalogue feature this cover.

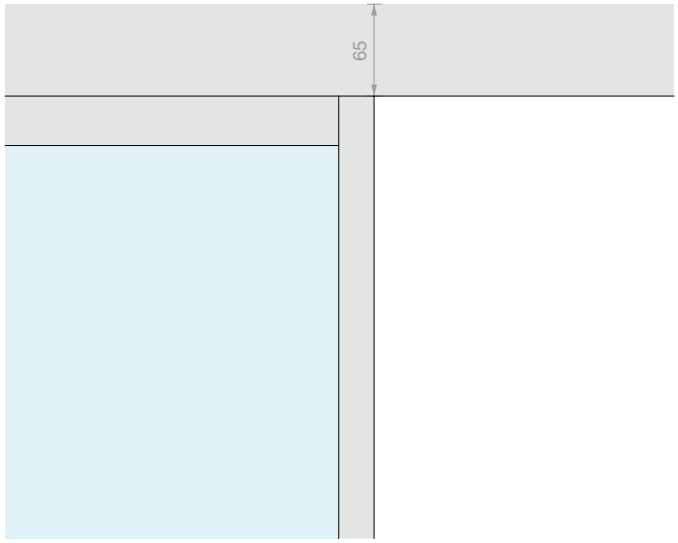

flush-fit cover on the door panel h = 55 mm

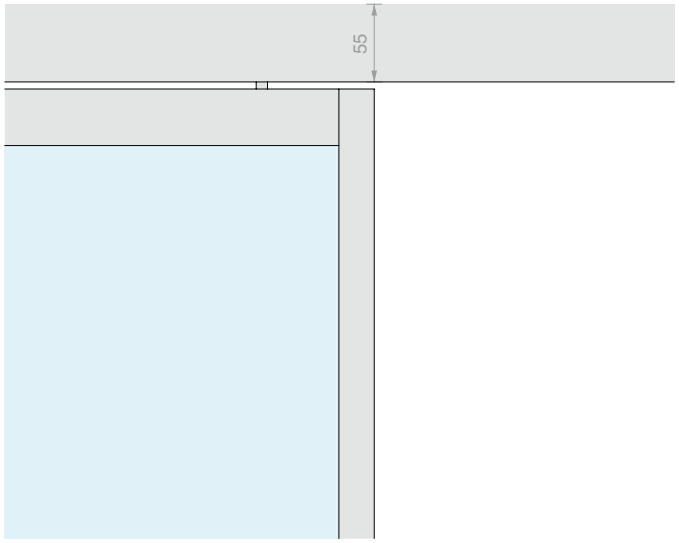

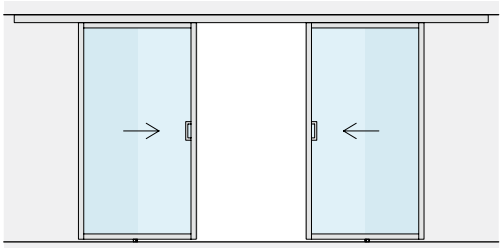

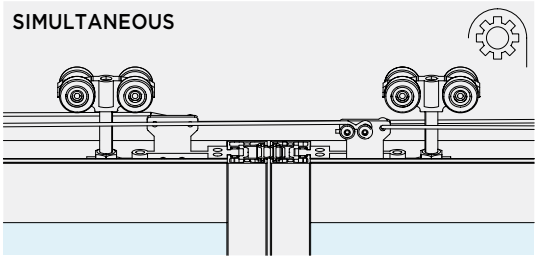

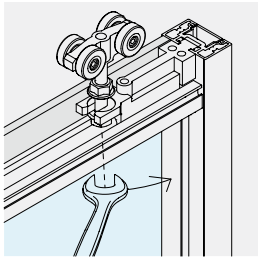

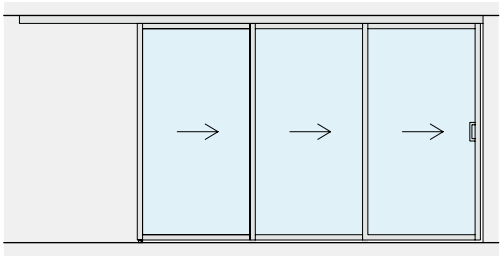

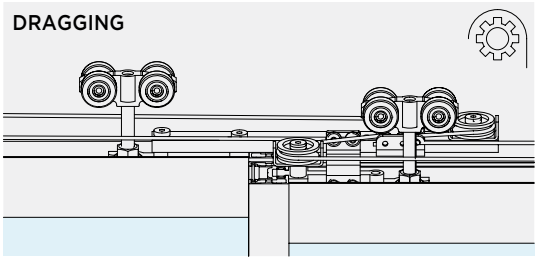

DOOR PANEL ADJUSTMENT
The height of the individual roller
can be adjusted to
change the position of the door panel by ±3 mm.

SYNCHRONISM
The following accessories are available for synchronisation:

SIMULTANEOUS
2 moving door panels installed on the same track

DRAGGING
2 or 3 moving panels on a 2- or 3-way track

SOFT CLOSE
The use of dampers gives controlled,
gentle opening and closing.

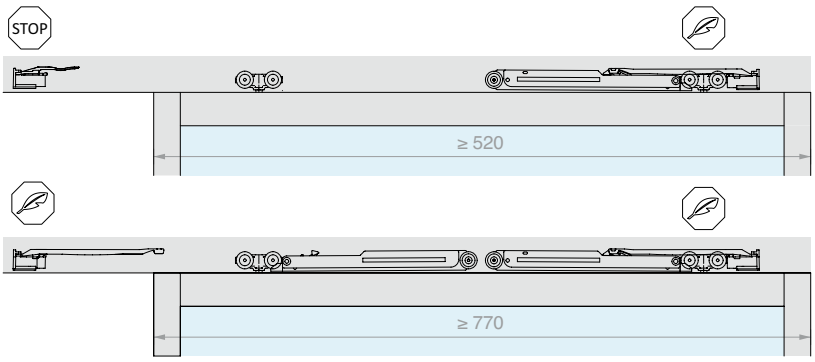

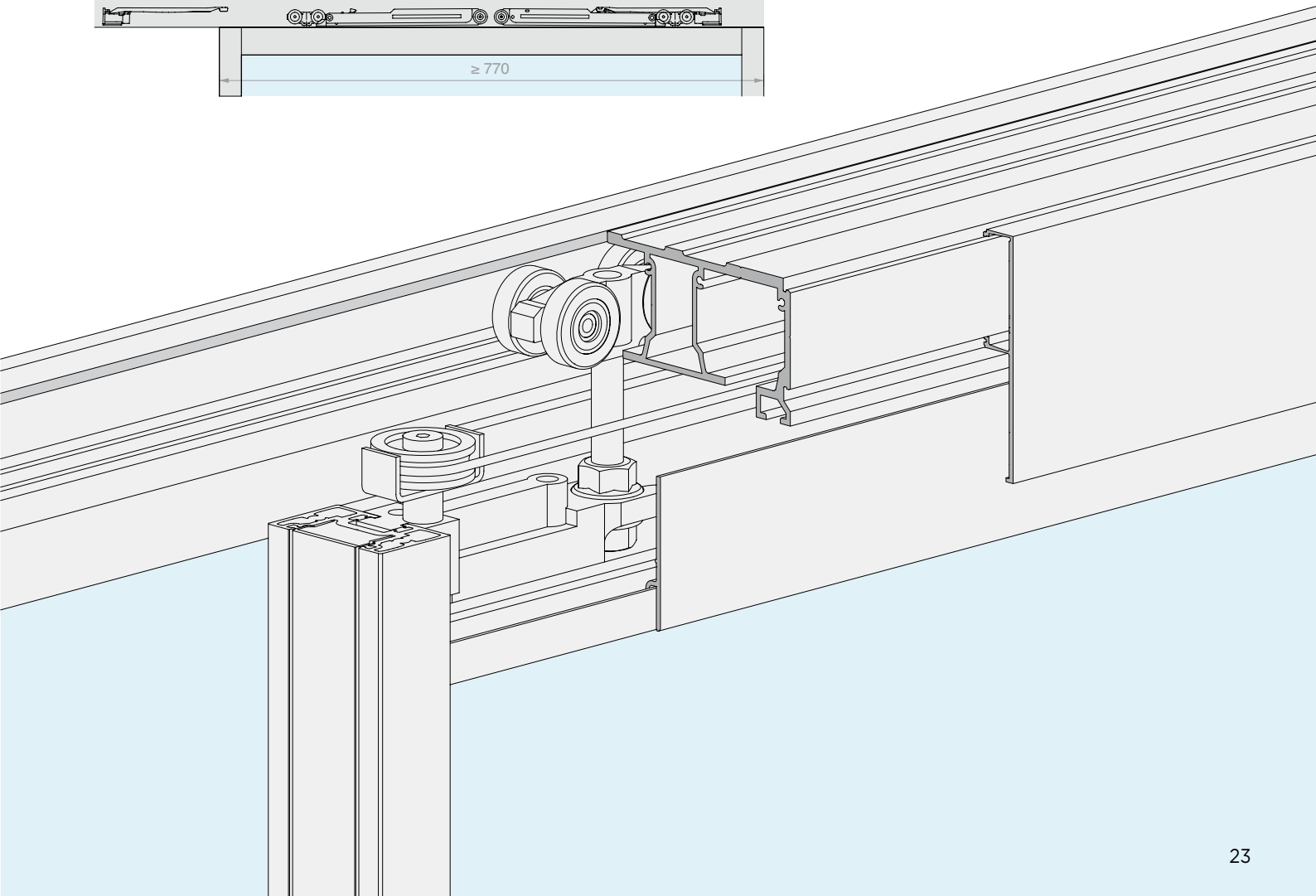

Versatility of design

The versatility of design offered by the LMT system allows you to create solutions that are not just limited to the range offered as kits in this section. Our design office is on hand to work on all of the potential options for any project. Any solution can be supplied cut to the required size.

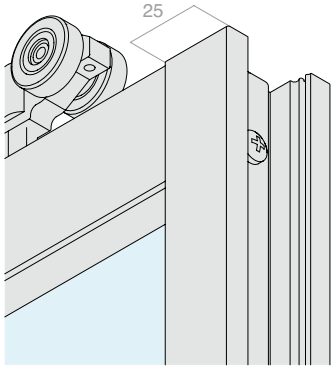

Single pane door panel

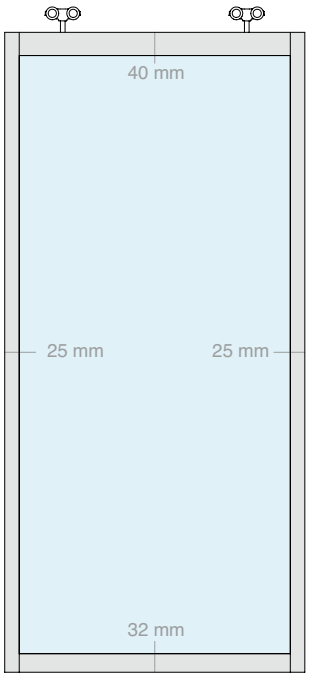

Multi-pane door panel

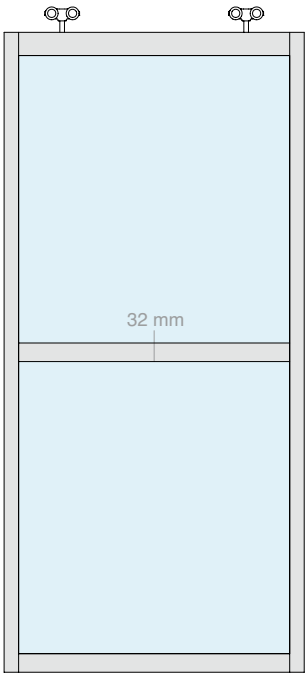

MOVING DOOR PANEL FRAME

The structural frame of the range is available in kit form and can be used with fill panels with thickness between 8 and 8.8 mm, whether made from glass or another material.

The columns of the frame are made with an open cavity that allows for quick and easy attachment to crosspieces with screws.

SINGLE / MULTI-PANE
The frame can house a single pane or it can be divided horizontally with an accessory crosspiece to hold multiple smaller panes.

CONFIGURATIONS OF THE MOVING DOOR PANEL

The open sides offer up to 4 design options: with trim cover, striking gasket, or full-length handle.

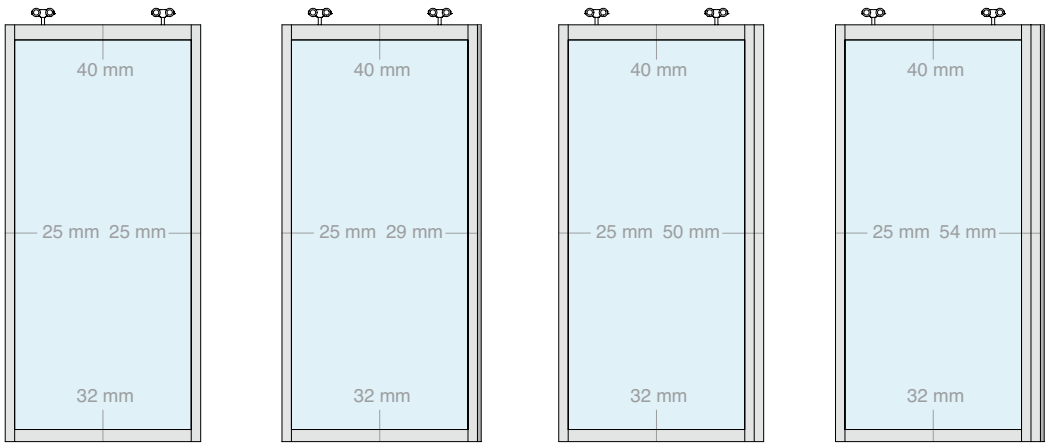

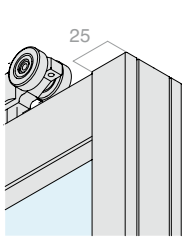

with trim cover

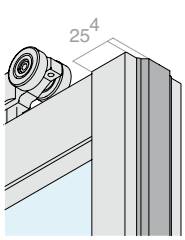

with striking gasket

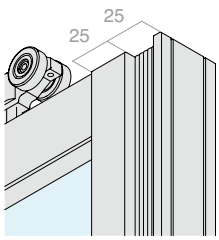

with full-length handle and trim cover

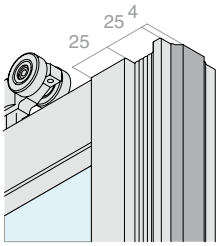

with full-length handle and striking gasket

3 HANDLES
4 CONFIGURATIONS

RAL FINISHES ON DEMAND

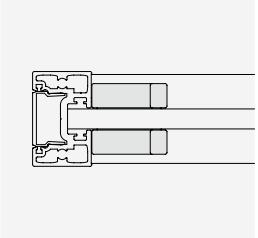

Art. HAND32140VHB
stuck to the glass

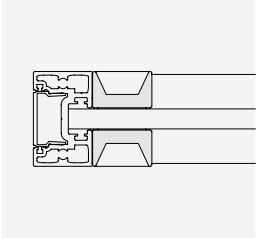

Art. MFM14025
stuck to the glass

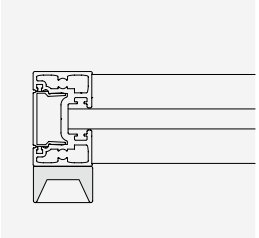

Art. MFM14025
screwed or stuck onto the profile

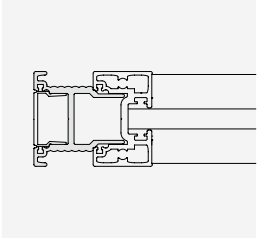

Art. LMC0038
extruded full-length, screwed on with or without gasket

SLAMMING POST

Striker on closing, with or without gasket.

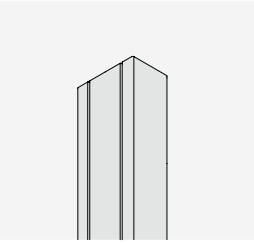

with cover

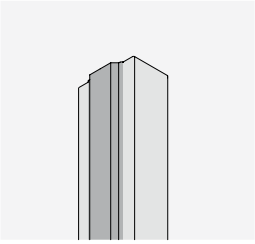

with striking gasket

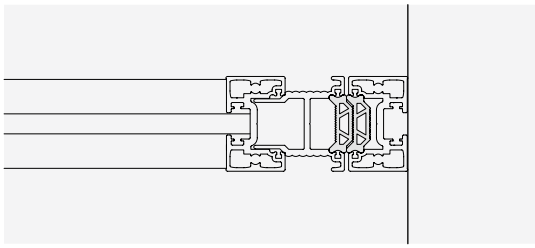

reversible gasket

LM INTELAIATO

Kit

CEILING FIXING

1-WAY

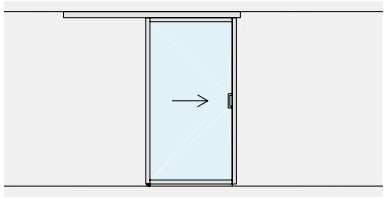

Page 30

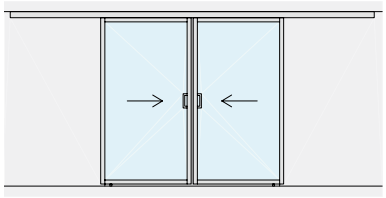

Page 34

1-WAY + FIXED

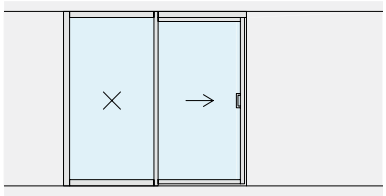

Page 38

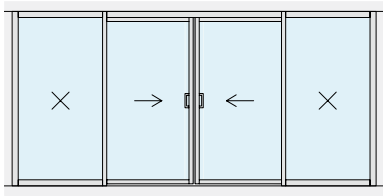

Page 42

2-WAY

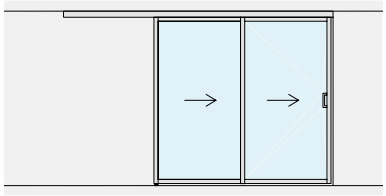

Page 46

2-WAY + FIXED

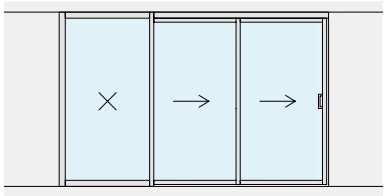

Page 50

3-WAY

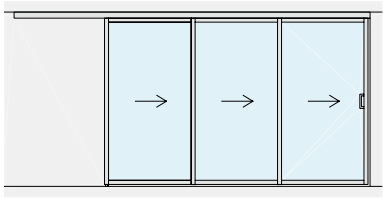

Page 54

3-WAY + FIXED

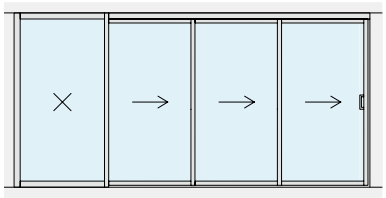

Page 59

WALL FIXING

1-WAY

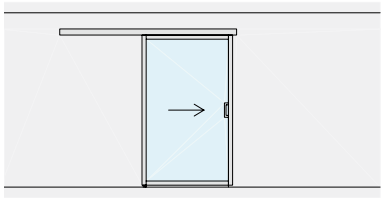

Page 62

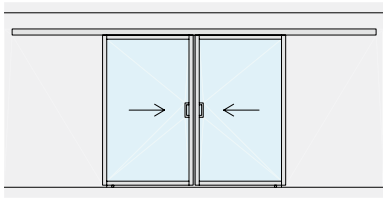

Page 66

SLIDING DOOR KIT WITH FRAME, CEILING FIXING SINGLE DRAGGING DOOR

Material: Aluminium
Finish: /6 /88 /97

WITHOUT HOLES IN THE GLASS

DOOR OPENING SIZE

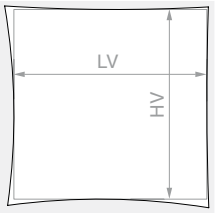

HV max: **3000** mm

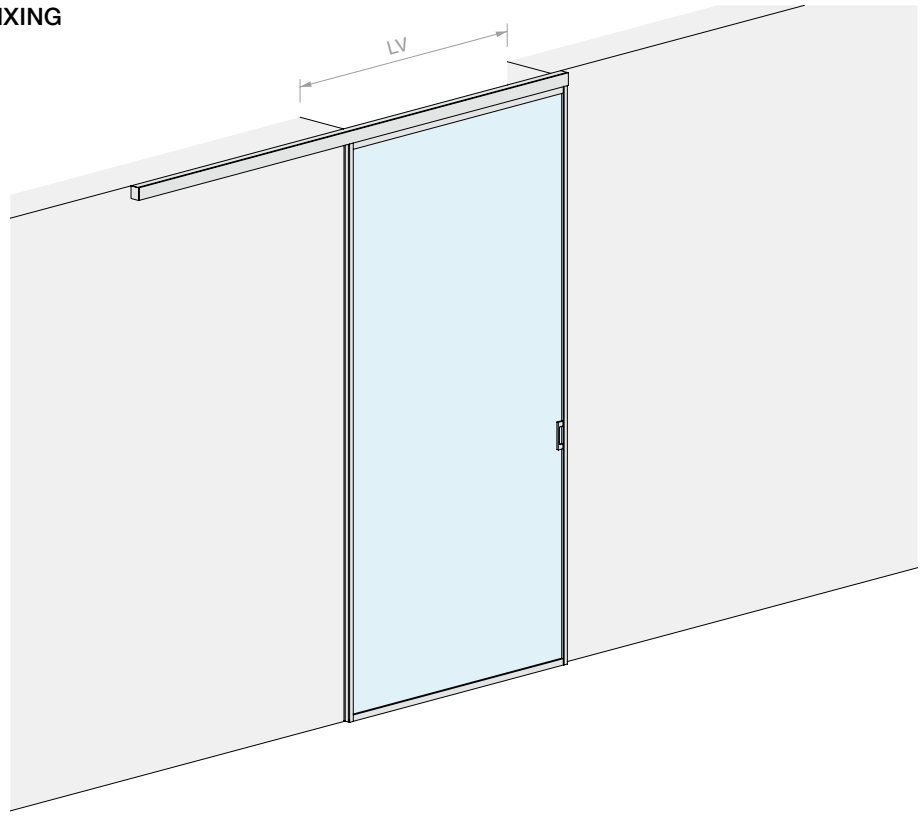

DOOR PANEL PANE

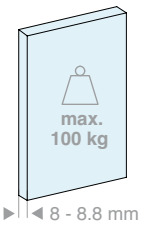

DOOR PANEL PANE

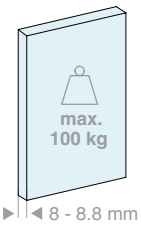

Kit comprising:

Art.	Description	Qty
LMINT-PCOV30.100	Sliding door panel kit with cover	1 Pc
LM21.200	Ceiling fixing track	1 Pc
LMCA065.200	Open cover for track	1 Pc
LMCC065.200	Closed cover for track	1 Pc
LM64051TP33	Finishing cap	2 Pcs
057.3073.072	End stop with buffer	2 Pcs
LMINT-GT915	Floor guide	1 Pc
HAND32140VHB	Adhesive handle	2 Pcs
Optional		
042.3102.072	Softbreak damper, 20-60 kg	1 Pc
042.3102.071	Softbreak damper, 61-100 kg	1 Pc

Kit comprising:

Art.	Description	Qty
LMINT-PCOV30.150	Sliding door panel kit with cover	1 Pc
LM21.300	Ceiling fixing track	1 Pc
LMCA065.300	Open cover for track	1 Pc
LMCC065.300	Closed cover for track	1 Pc
LM64051TP33	Finishing cap	2 Pcs
057.3073.072	End stop with buffer	2 Pcs
LMINT-GT915	Floor guide	1 Pc
HAND32140VHB	Adhesive handle	2 Pcs
Optional		
042.3102.072	Softbreak damper, 20-60 kg	1 Pc
042.3102.071	Softbreak damper, 61-100 kg	1 Pc

Art.	LV max	Qty
LMT6511.200	**950** mm	1 Pc

Art.	LV max	Qty
LMT6511.300	**1450** mm	1 Pc

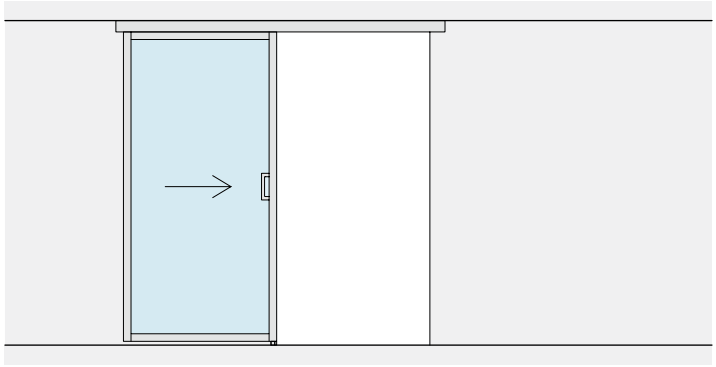

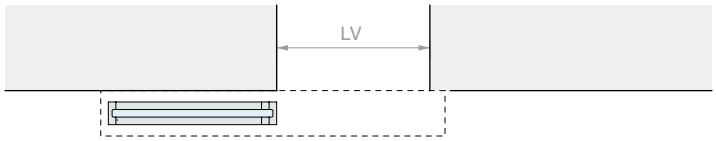
LV

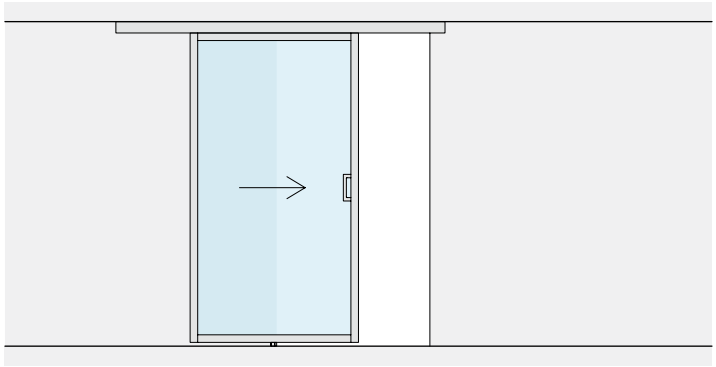

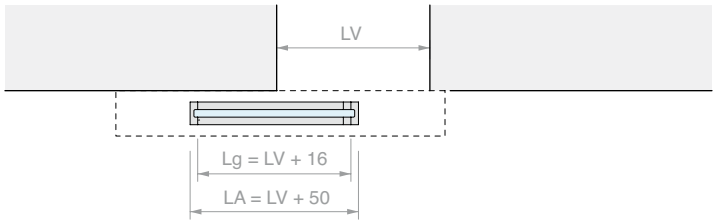
LV
Lg = LV + 16
LA = LV + 50

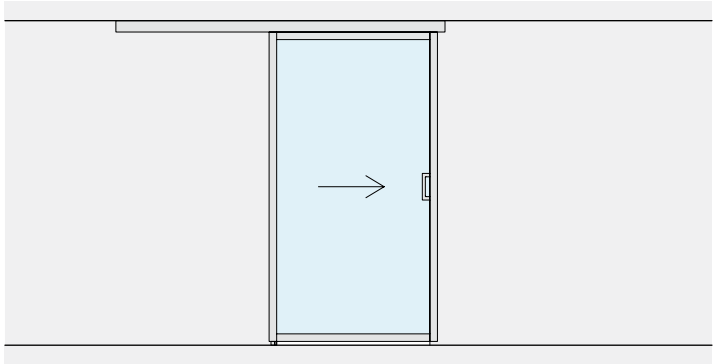

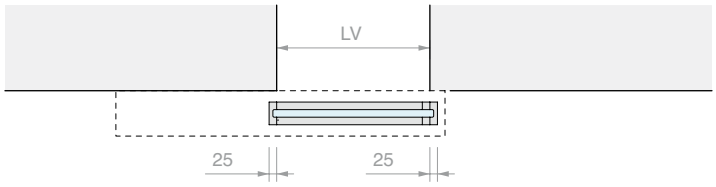
LV
25
25

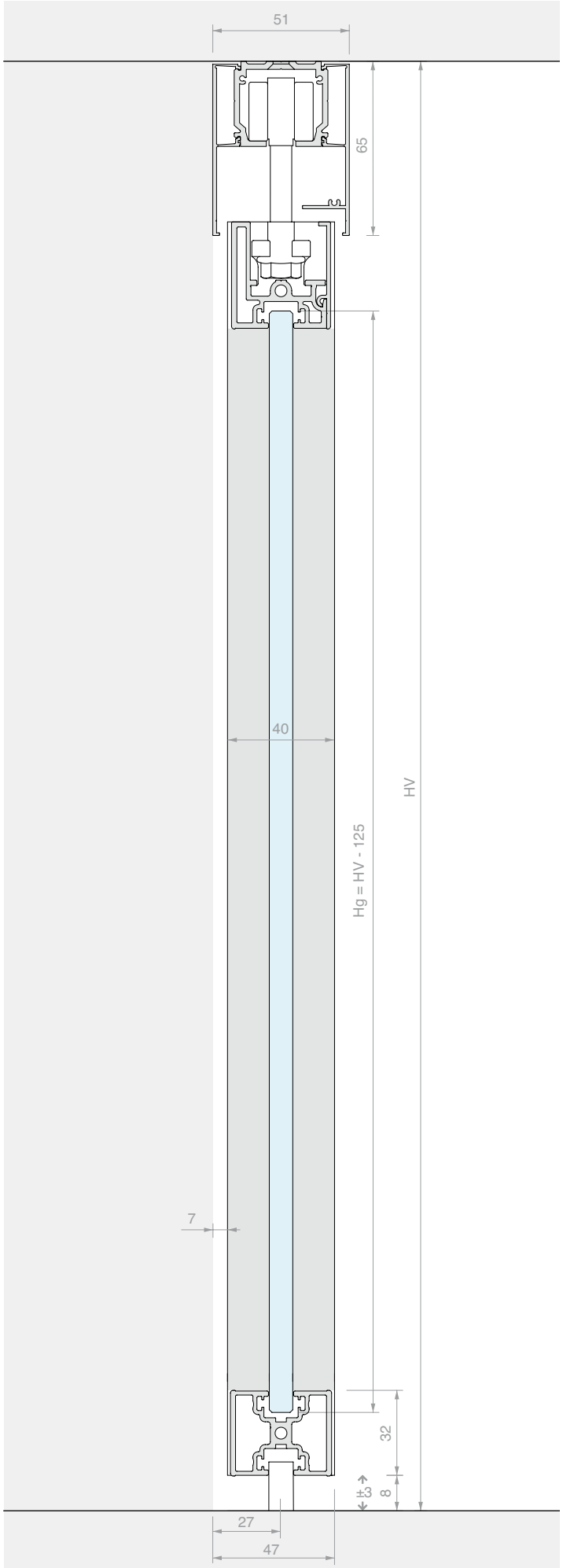
51
65
40
HV
Hg = HV - 125
7
32
±3
8
27
47

SLIDING DOOR KIT WITH FRAME, CEILING FIXING DOUBLE DOOR, SYNCHRONISED

Material: Aluminium
Finish: /6 /88 /97

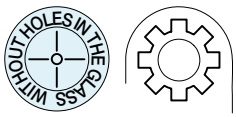

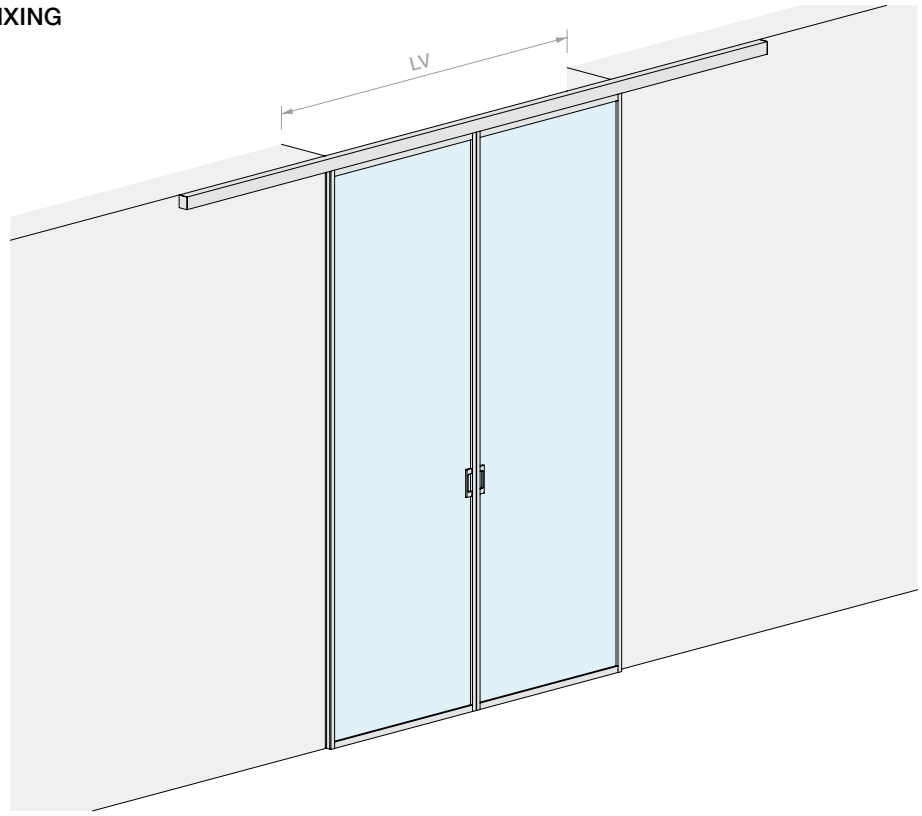

DOOR OPENING SIZE

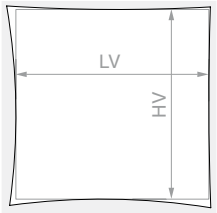

HV max: **3000** mm

DOOR PANEL PANE

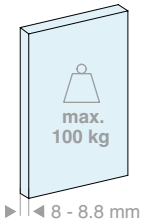

Kit comprising:

Art.	Description	Qty
LMINT-PGUA30.100	Sliding door panel kit with gasket	2 Pcs
LM21.400	Ceiling fixing track	1 Pc
LMCA065.400	Open cover for track	1 Pc
LMCC065.400	Closed cover for track	1 Pc
LM64051TP33	Finishing cap	2 Pcs
057.3073.071	End stop without buffer	4 Pcs
LMSIN-2AC11	Synchronism kit for 2 in-line door panels	1 Pc
HAND32140VHB	Adhesive handle	4 Pcs

Optional

042.3102.072	Softbreak damper, 20-60 kg	2 Pcs
042.3102.071	Softbreak damper, 61-100 kg	2 Pcs

Art.	LV max	Qty
LMT6511C.400	**1970** mm	1 Pc

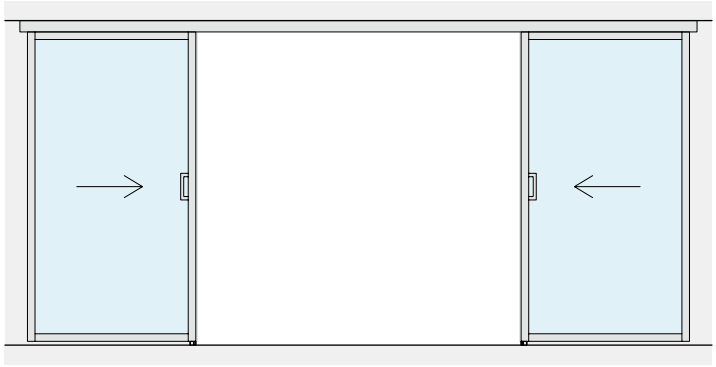

LV

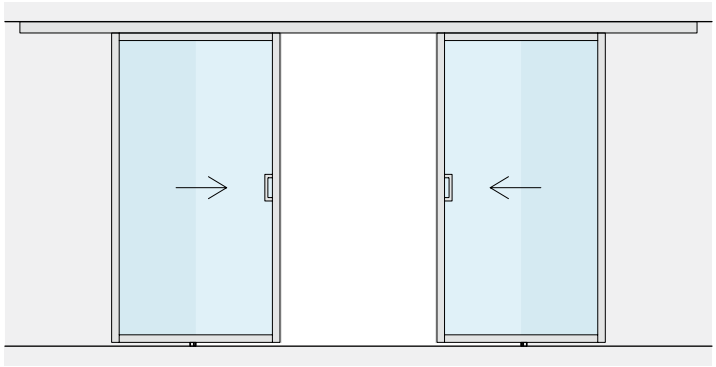

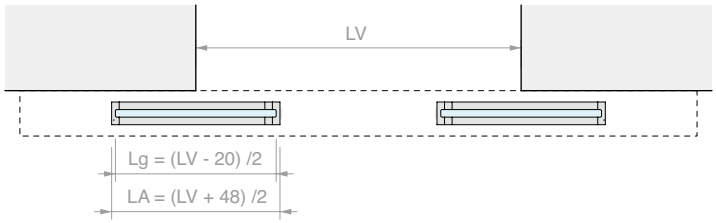
LV
Lg = (LV - 20) /2
LA = (LV + 48) /2

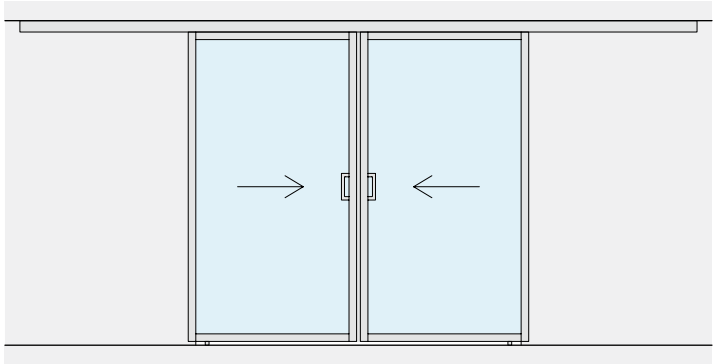

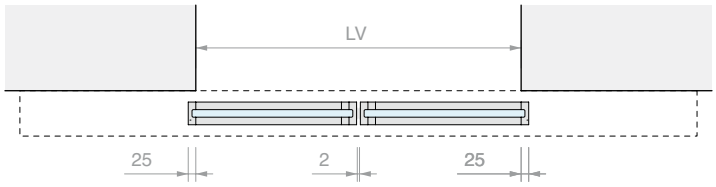
LV
25
2
25

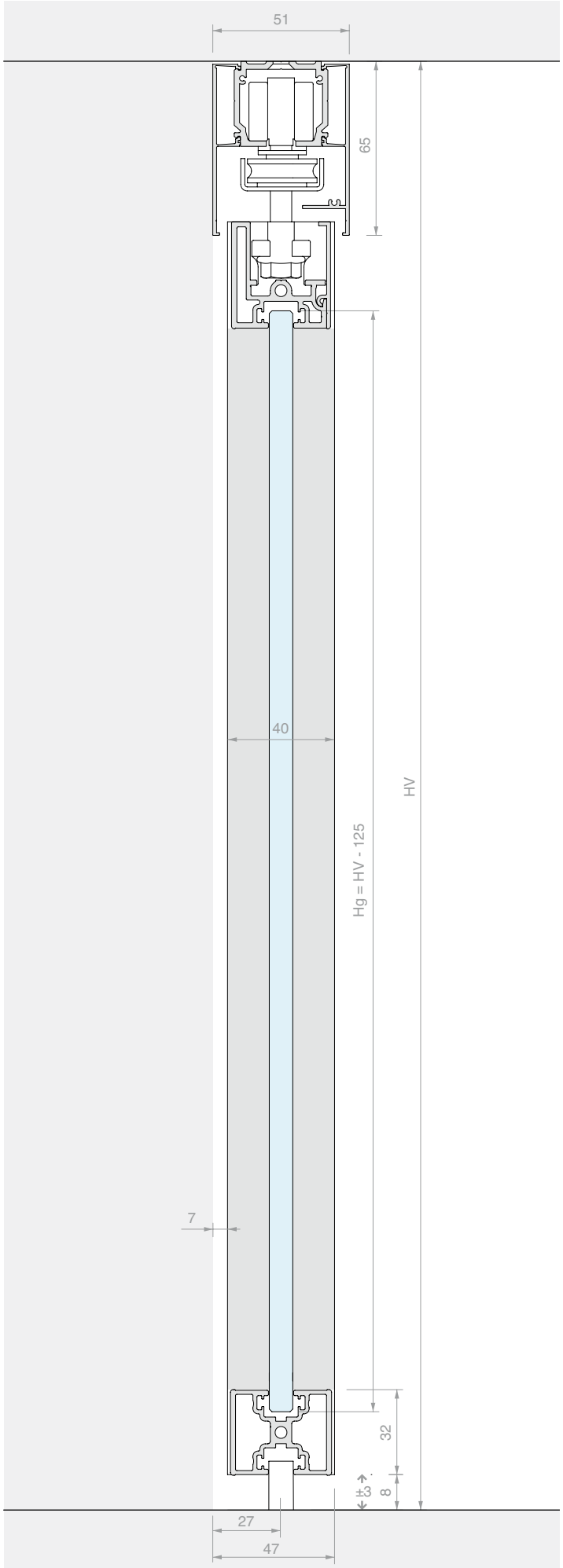
51
65
40
HV
Hg = HV - 125
7
32
±3
8
27
47

SLIDING DOOR KIT WITH FRAME, CEILING FIXING SINGLE DOOR AND FIXED GLASS

Material: Aluminium
Finish: /6 /88 /97

WITHOUT HOLES IN THE GLASS

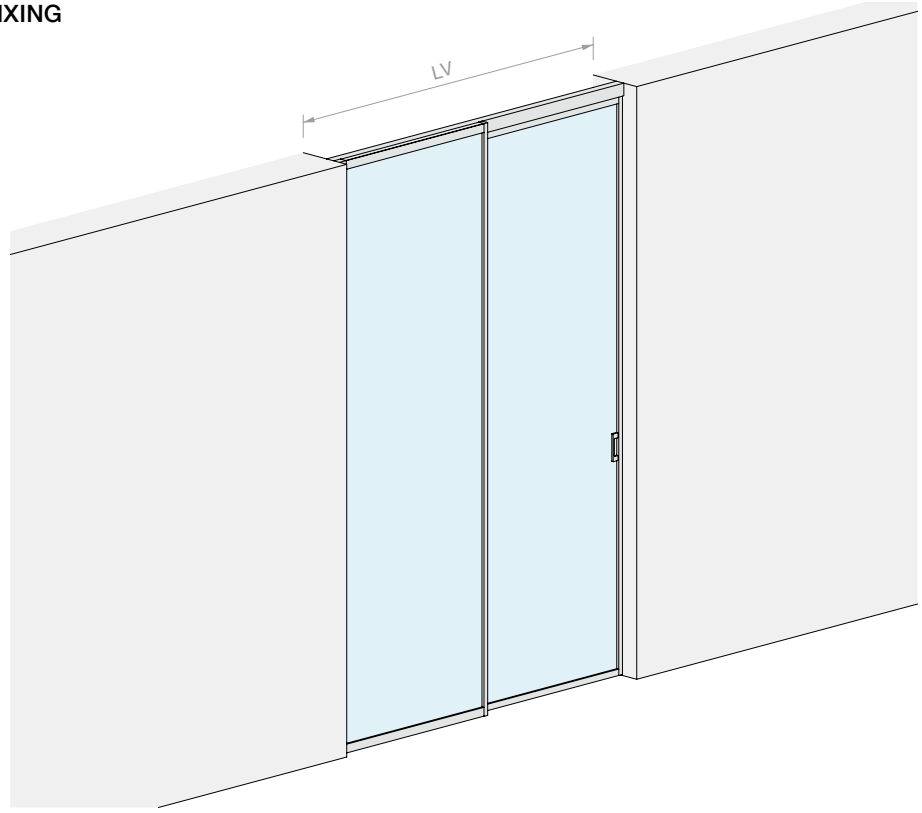

DOOR OPENING SIZE

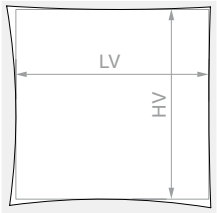

HV max: **3000** mm

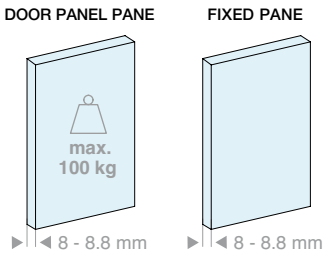

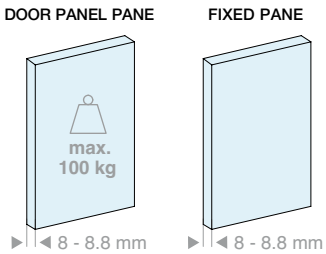

Kit comprising:

Art.	Description	Qty
LMINT-PCOV30.100	Sliding door panel kit with cover	1 Pc
LMINT-VFIX30.100	Framed fixed glass kit	1 Pc
LM21.200	Ceiling fixing track	1 Pc
FOU1013.30	U profile	1 Pc
LMCA065.200	Open cover for track	1 Pc
LMCC065.200	Closed cover for track	1 Pc
057.3073.072	End stop with buffer	2 Pcs
LMINT-GT915	Floor guide	1 Pc
HAND32140VHB	Adhesive handle	2 Pcs
Optional		
042.3102.072	Softbreak damper, 20-60 kg	1 Pc
042.3102.071	Softbreak damper, 61-100 kg	1 Pc

Kit comprising:

Art.	Description	Qty
LMINT-PCOV30.150	Sliding door panel kit with cover	1 Pc
LMINT-VFIX30.150	Framed fixed glass kit	1 Pc
LM21.300	Ceiling fixing track	1 Pc
FOU1013.30	U profile	1 Pc
LMCA065.300	Open cover for track	1 Pc
LMCC065.300	Closed cover for track	1 Pc
057.3073.072	End stop with buffer	2 Pcs
LMINT-GT915	Floor guide	1 Pc
HAND32140VHB	Adhesive handle	2 Pcs
Optional		
042.3102.072	Softbreak damper, 20-60 kg	1 Pc
042.3102.071	Softbreak damper, 61-100 kg	1 Pc

Art.	LV max	Qty
LMT6511F.200	**2000** mm	1 Pc

Art.	LV max	Qty
LMT6511F.300	**3000** mm	1 Pc

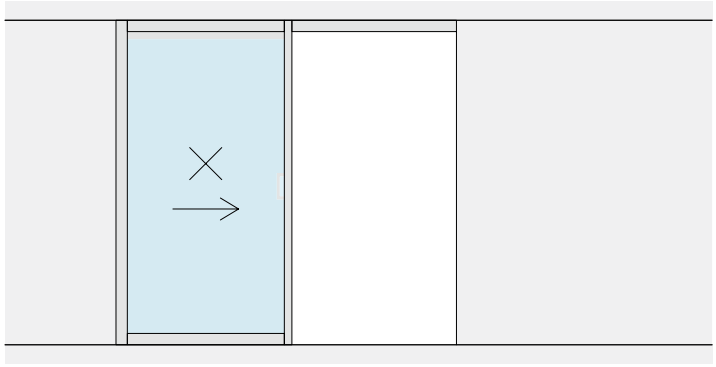

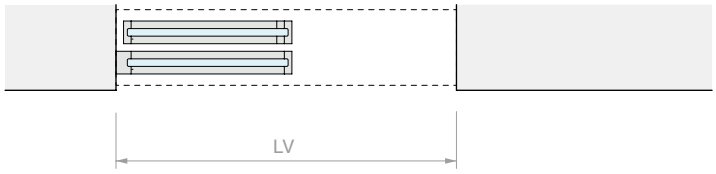
LV

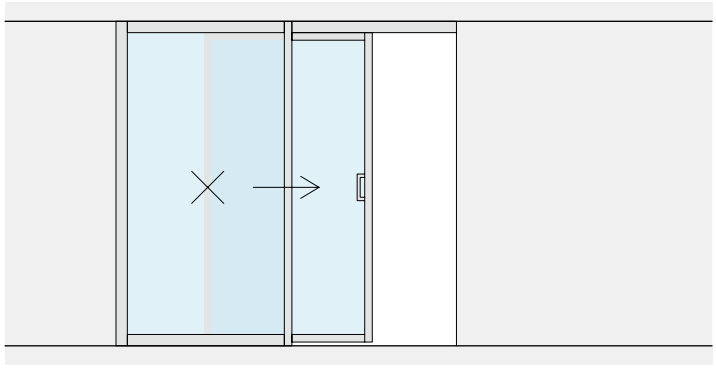

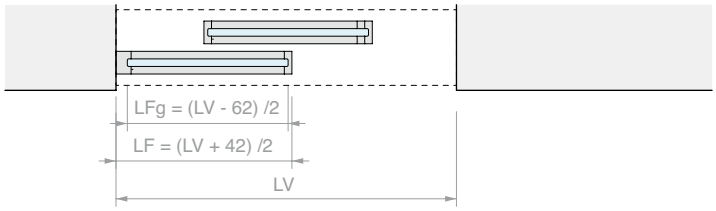
LFg = (LV - 62) /2
LF = (LV + 42) /2
LV

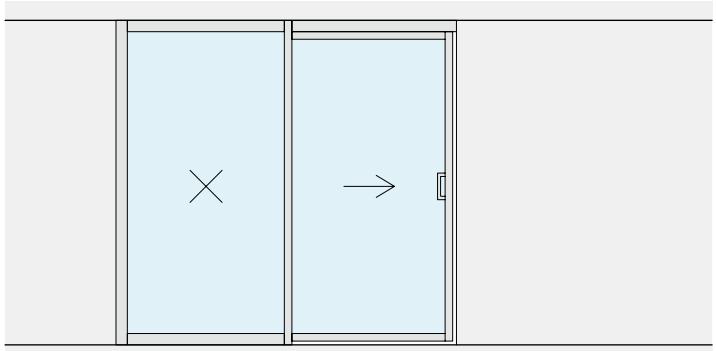

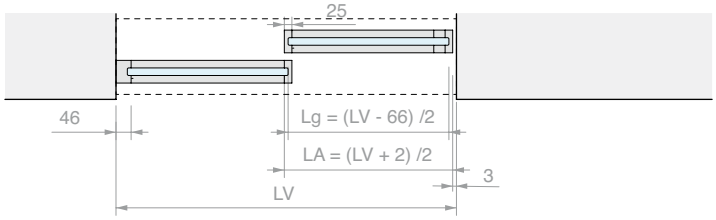
25
46
Lg = (LV - 66) /2
LA = (LV + 2) /2
3
LV

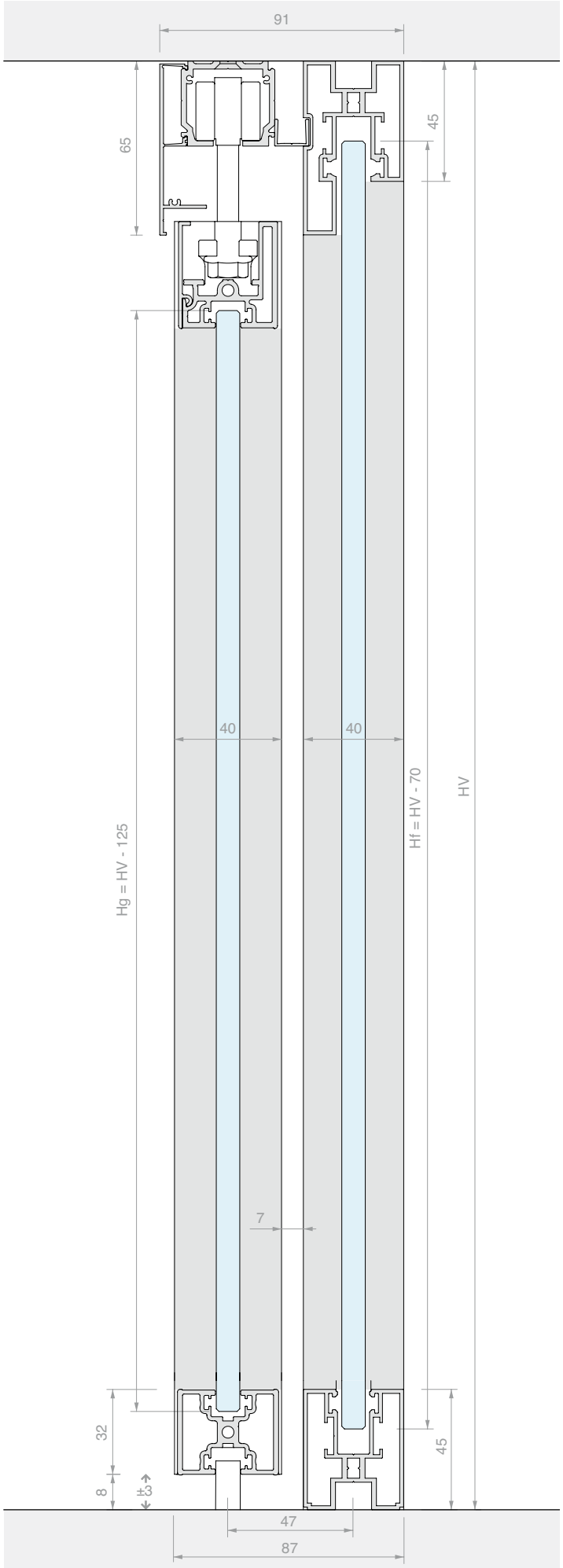
91
65
45
40
40
Hg = HV - 125
Hf = HV - 70
HV
7
32
8
±3
45
47
87

SLIDING DOOR KIT WITH FRAME, CEILING FIXING
SYNCHRONISED DOUBLE DOOR AND DOUBLE FIXED GLASS

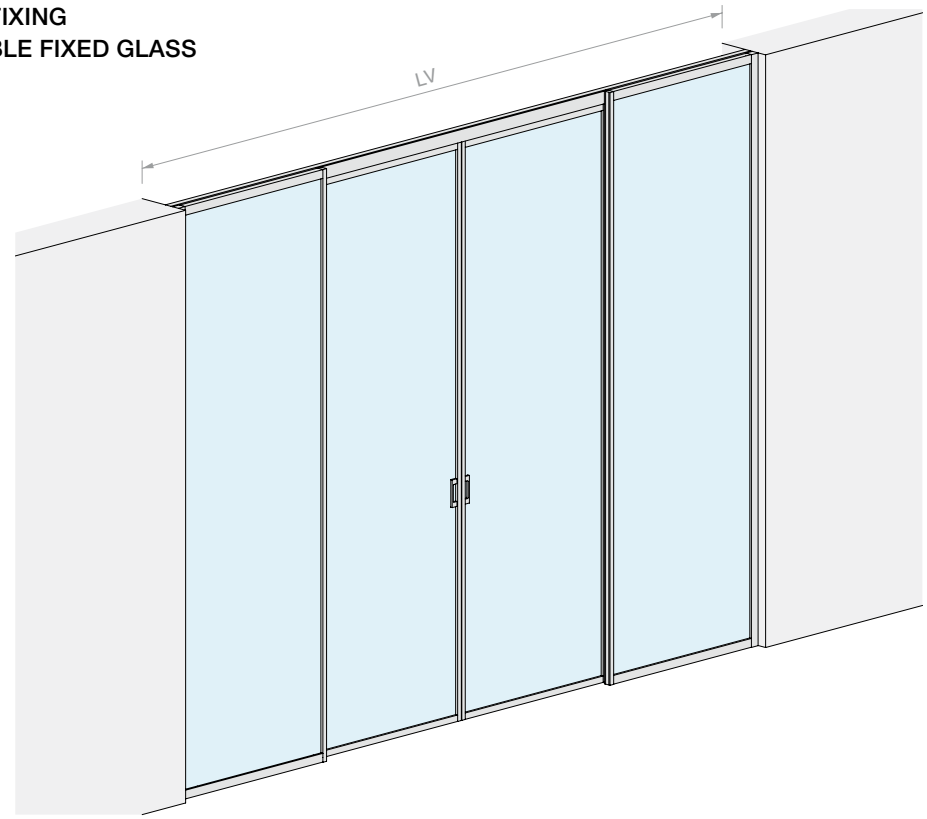

Material: Aluminium
Finish: /6 /88 /97

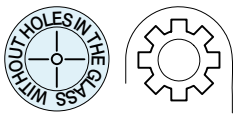

DOOR OPENING SIZE

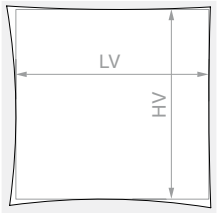

HV max: **3000** mm

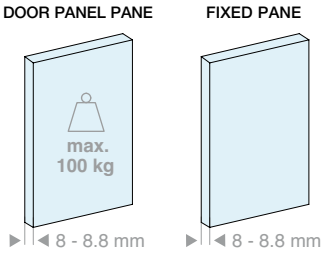

Kit comprising:

Art.	Description	Qty
LMINT-PGUA30.100	Sliding door panel kit with gasket	2 Pcs
LMINT-VFIX30.100	Framed fixed glass kit	2 Pcs
LM21.400	Ceiling fixing track	1 Pc
FOU1013.30	U profile	2 Pcs
LMCA065.400	Open cover for track	2 Pcs
057.3073.071	End stop without buffer	4 Pcs
LMSIN-2AC11	Synchronism kit for 2 in-line door panels	1 Pc
HAND32140VHB	Adhesive handle	4 Pcs

Optional

042.3102.072	Softbreak damper, 20-60 kg	2 Pcs
042.3102.071	Softbreak damper, 61-100 kg	2 Pcs

Art.	LV max	Qty
LMT6511CF.400	**4000** mm	1 Pc

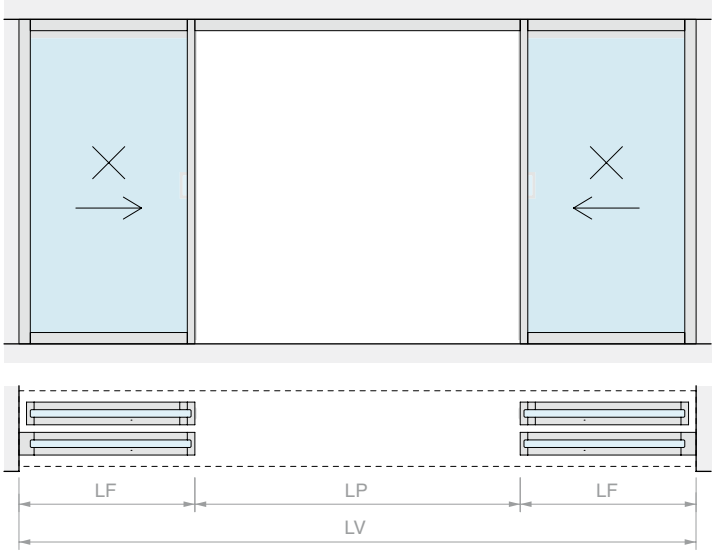
LF
LP
LF
LV

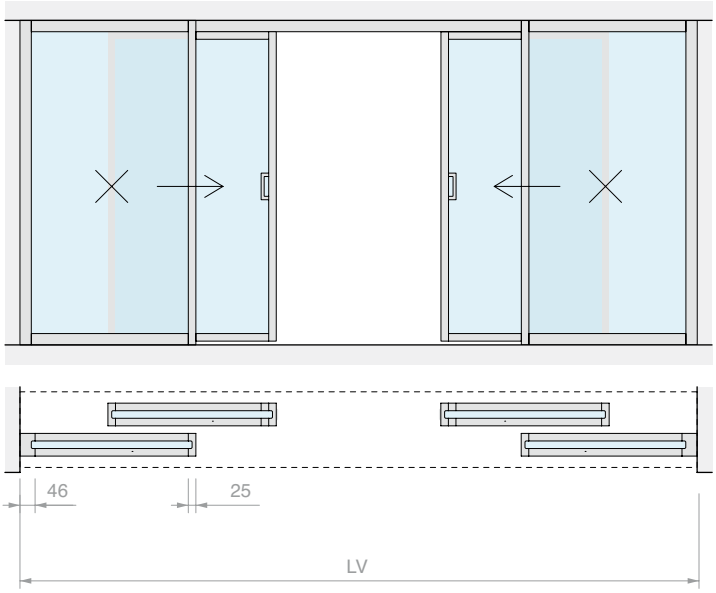
46
25
LV

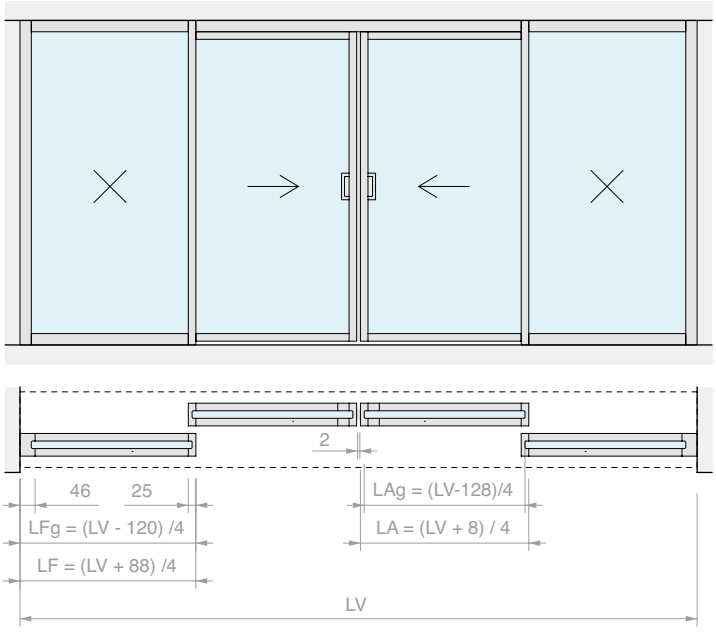
2
46
25
LFg = (LV - 120) /4
LF = (LV + 88) /4
LAg = (LV-128)/4
LA = (LV + 8) / 4
LV

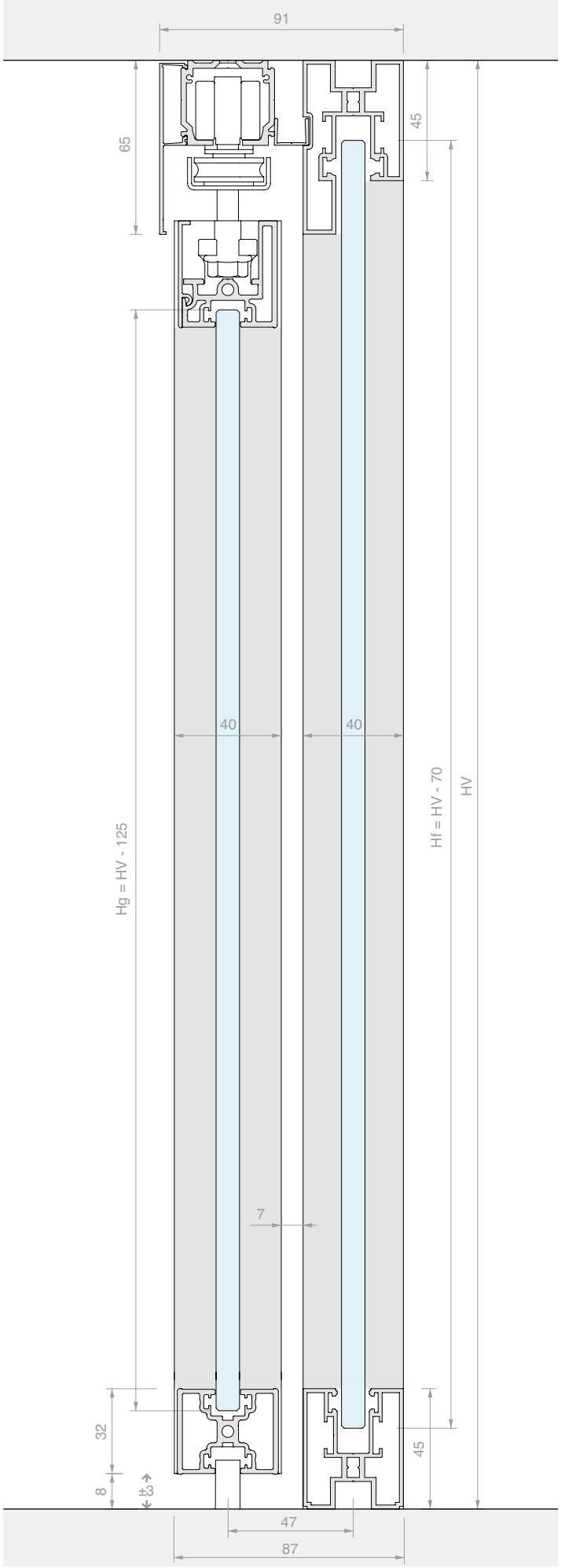
91
65
45
40
40
Hg = HV - 125
Hf = HV - 70
HV
7
32
8
±3
45
47
87

SLIDING DOOR KIT WITH FRAME, CEILING FIXING DOUBLE DRAGGING DOOR WITH SYNCHRONISM

Material: Aluminium
Finish: /6 /88 /97

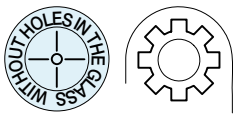

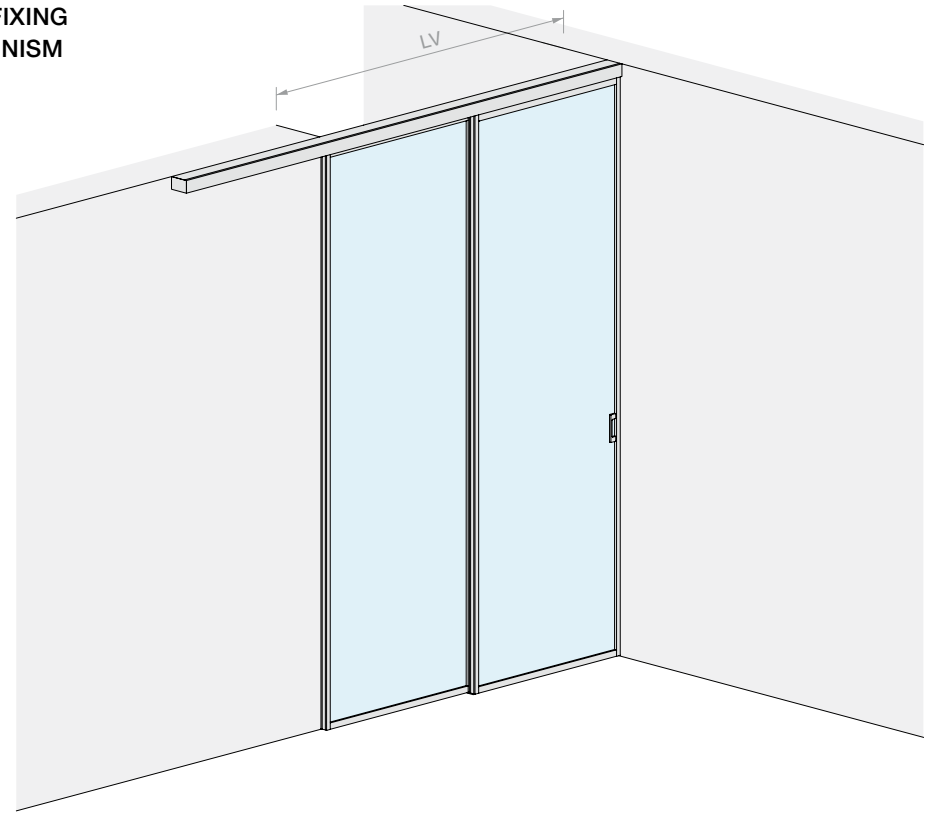

DOOR OPENING SIZE

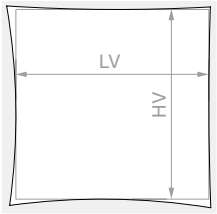

HV max: **3000** mm

DOOR PANEL PANE

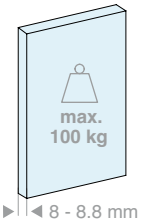

Kit comprising:

Art.	Description	Qty
LMINT-PCOV30.100	Sliding door panel kit with cover	1 Pc
LMINT-PGUA30.100	Sliding door panel kit with gasket	1 Pc
LM2V082.300	2-way ceiling fixing track	1 Pc
LMCA065.300	Open cover for track	2 Pcs
LM64098TP33	Finishing cap	2 Pcs
057.3073.072	End stop with buffer	2 Pcs
057.3073.071	End stop without buffer	2 Pcs
LMSIN-2AT21	Synchronism kit for 2 dragging doors	1 Pc
HAND32140VHB	Adhesive handle	2 Pcs
Optional		
042.3102.071	Softbreak damper, for panels from 40 to 65 kg	1 or 2 Pcs

Art.	LV max	Qty
LMT6512.300	**1975** mm	1 Pc

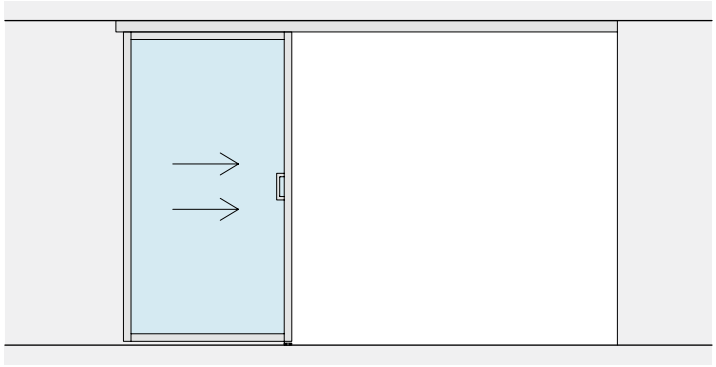

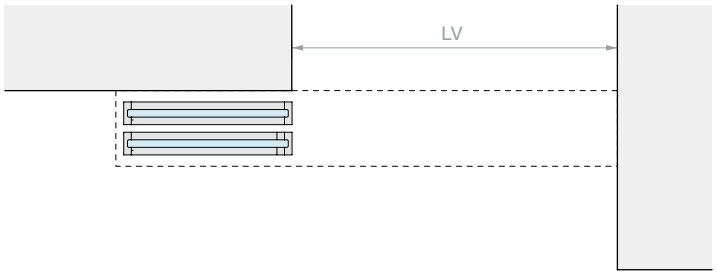
LV

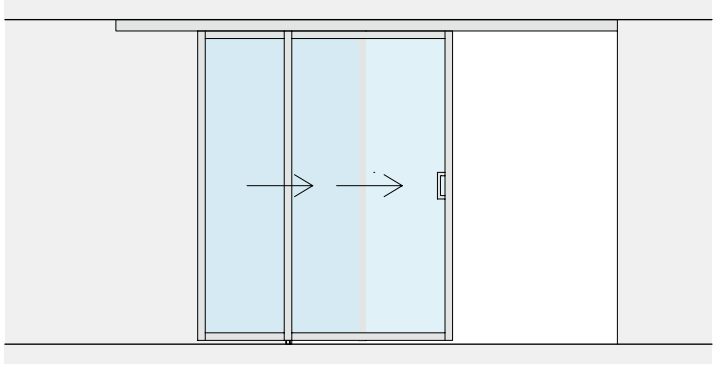

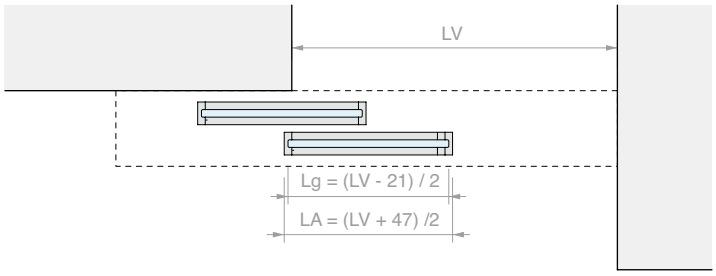
LV
Lg = (LV - 21) / 2
LA = (LV + 47) /2

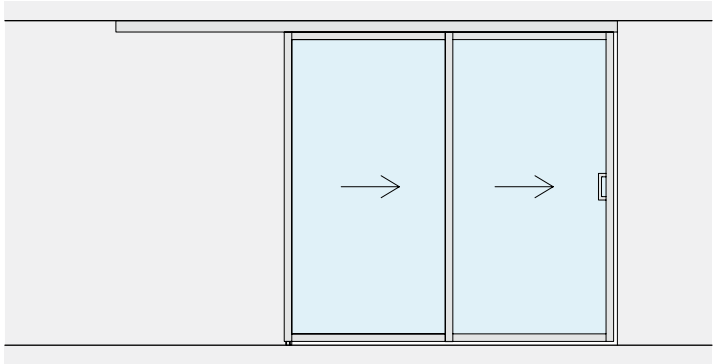

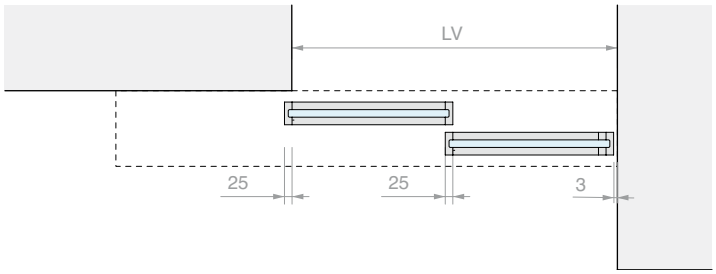
LV
25
25
3

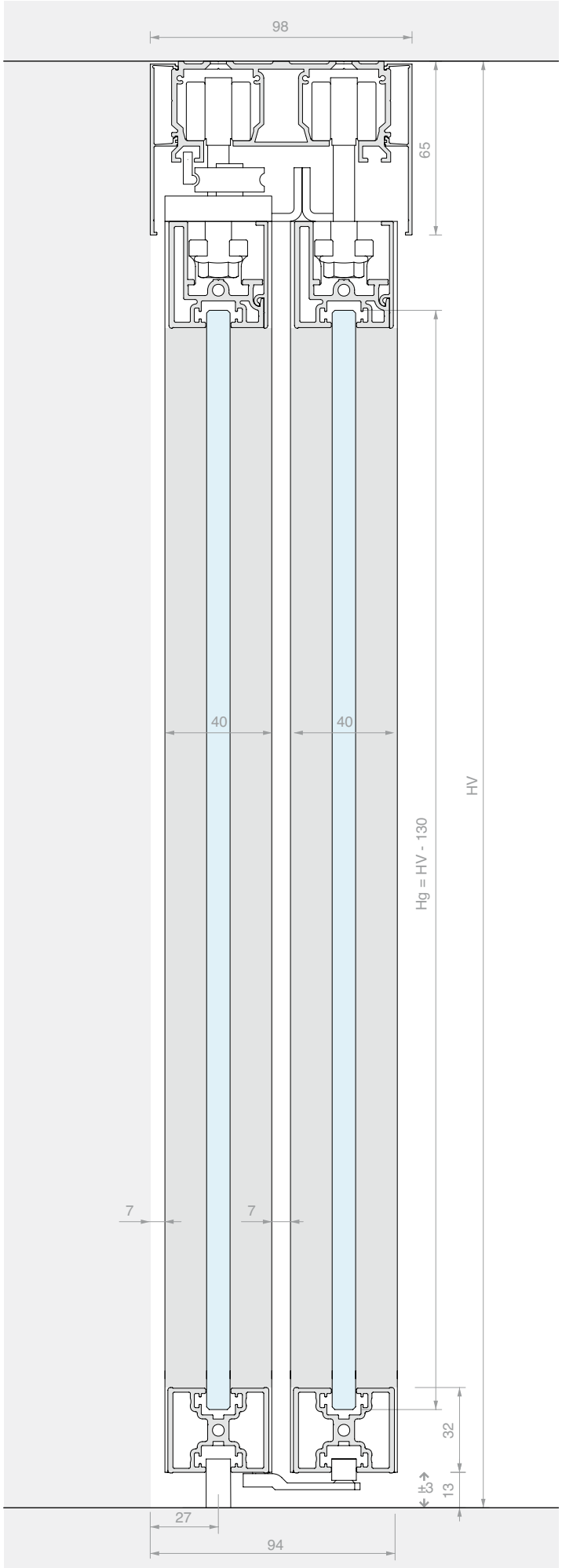
98
65
40
40
HV
Hg = HV - 130
7
7
32
±3
13
27
94

SLIDING DOOR KIT WITH FRAME, CEILING FIXING
DOUBLE DRAGGING DOOR WITH SYNCHRONISM AND FIXED GLASS

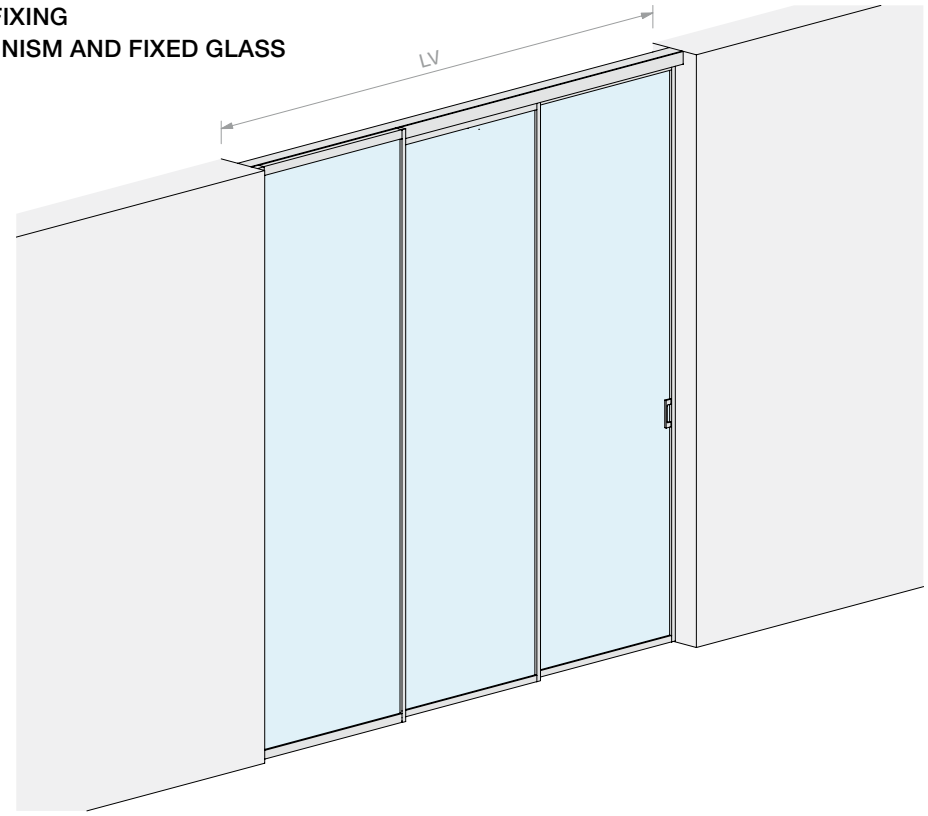

Material: Aluminium
Finish: /6 /88 /97

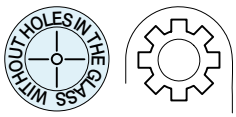

DOOR OPENING SIZE

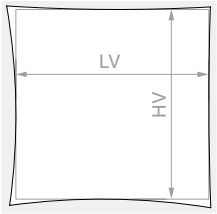

HV max: **3000** mm

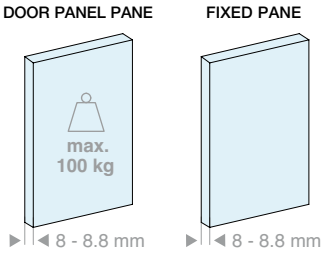

Kit comprising:

Art.	Description	Qty
LMINT-PCOV30.100	Sliding door panel kit with cover	1 Pc
LMINT-PGUA30.100	Sliding door panel kit with gasket	1 Pc
LMINT-VFIX30.100	Framed fixed glass kit	1 Pc
LM2V082.300	2-way ceiling fixing track	1 Pc
FOU1013.30	U profile	1 Pc
LMCA065.300	Open cover for track	2 Pcs
057.3073.072	End stop with buffer	2 Pcs
057.3073.071	End stop without buffer	2 Pcs
LMSIN-2AT21	Synchronism kit for 2 door panels, lead & follower	1 Pc
HAND32140VHB	Adhesive handle	2 Pcs

Optional

042.3102.071	Softbreak damper, for panels from 40 to 65 kg	1 or 2 Pcs

Art.	LV max	Qty
LMT6512F.300	**3000** mm	1 Pc

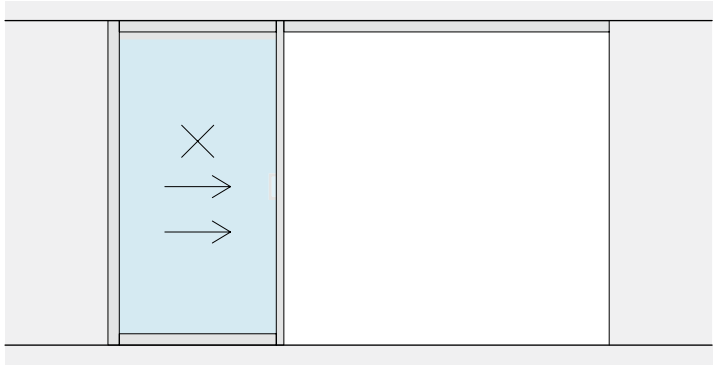

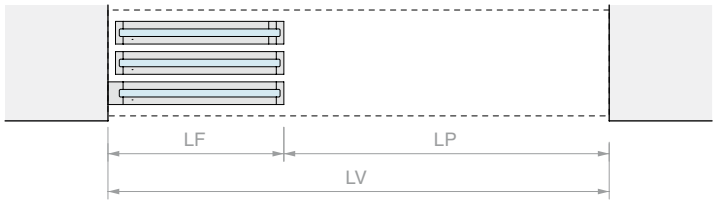
LF
LP
LV

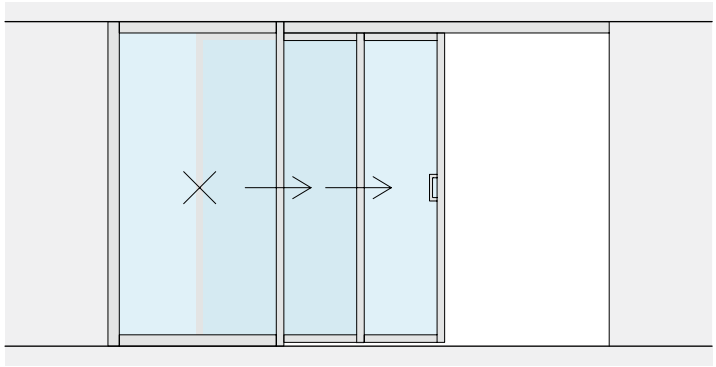

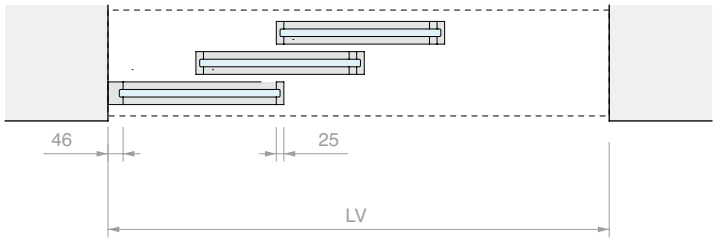
46
25
LV

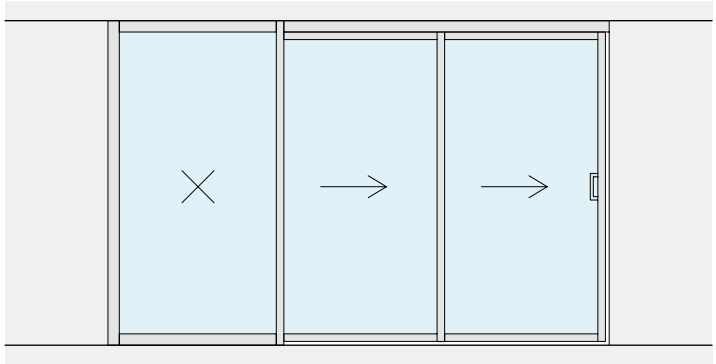

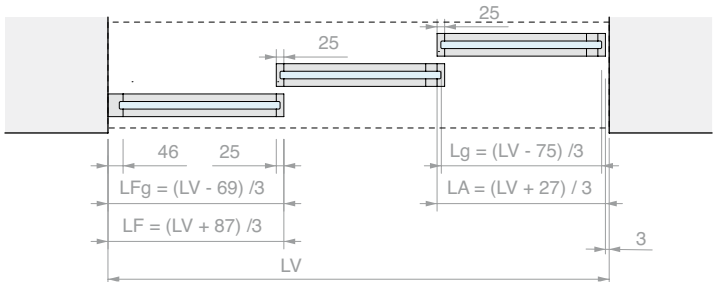
25
25
46
25
LFg = (LV - 69) /3
LF = (LV + 87) /3
Lg = (LV - 75) /3
LA = (LV + 27) / 3
3
LV

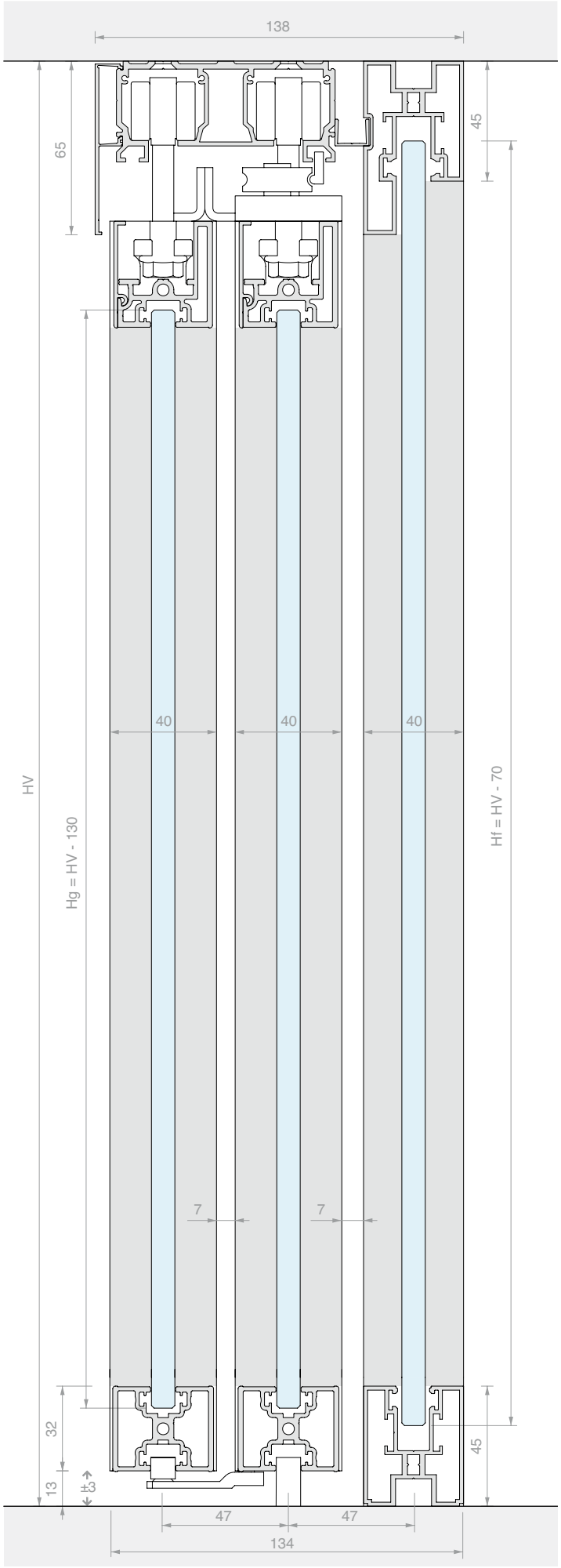
138
65
45
40
40
40
HV
Hg = HV - 130
Hf = HV - 70
7
7
32
13
3
45
47
47
134

SLIDING DOOR KIT WITH FRAME, CEILING FIXING TRIPLE DRAGGING DOOR

Material: Aluminium
Finish: /6 /88 /97

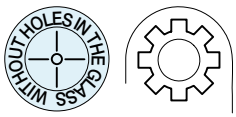

DOOR OPENING SIZE

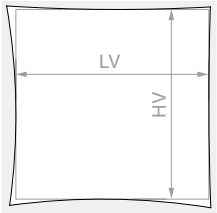

HV max: **3000** mm

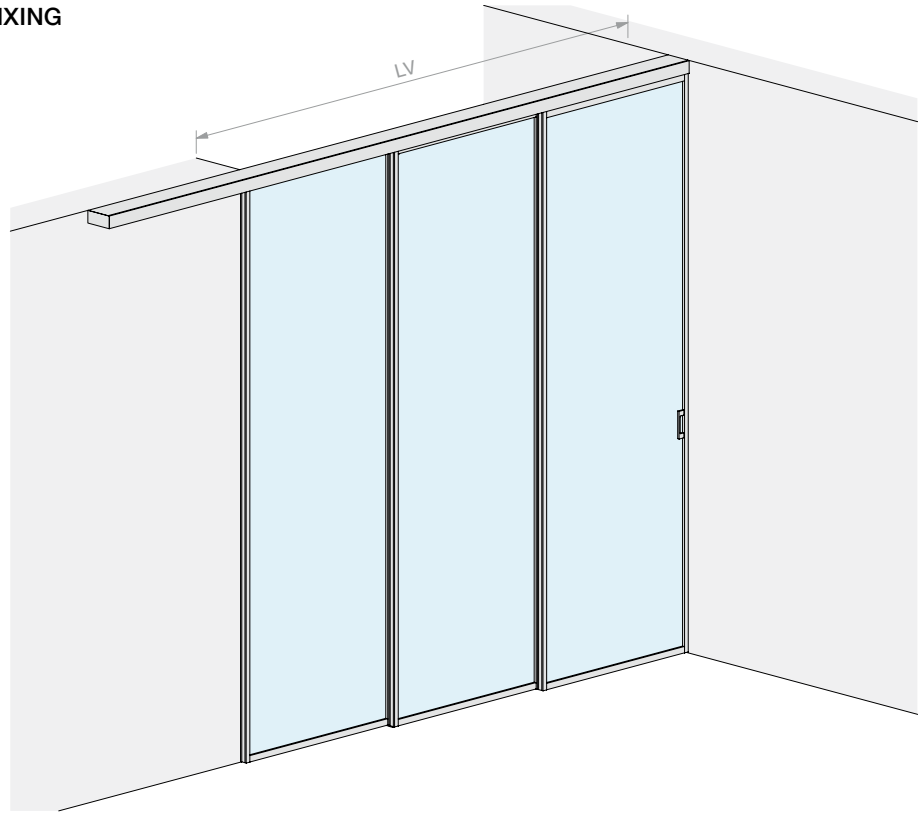

DOOR PANEL PANE

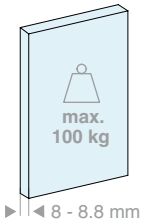

Kit comprising:

Art.	Description	Qty
LMINT-PCOV30.100	Sliding door panel kit with cover	2 Pcs
LMINT-PGUA30.100	Sliding door panel kit with gasket	1 Pc
LM3V129.400	3-way ceiling fixing track	1 Pc
LMCA065.400	Open cover for track	2 Pcs
LM64145TP33	Finishing cap	2 Pcs
057.3073.072	End stop with buffer	2 Pcs
057.3073.071	End stop without buffer	4 Pcs
LMSIN-3AT31	Synchronism kit for 3 dragging doors	1 Pc
HAND32140VHB	Adhesive handle	2 Pcs

Optional

042.3102.071	Softbreak damper, for panels from 30 to 55 kg	1 or 2 Pcs

Art.	LV max	Qty
LMT6513.400	**2975** mm	1 Pc

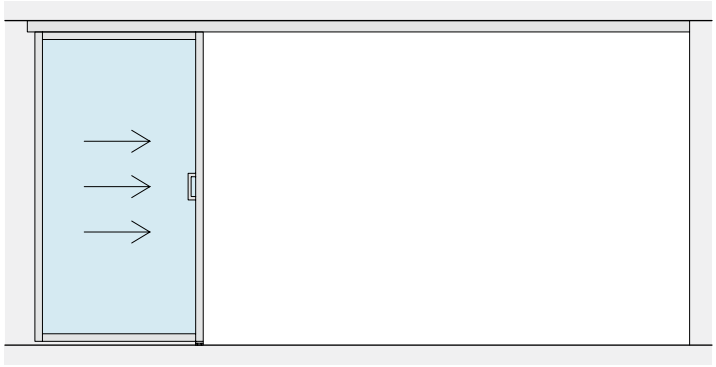

LV

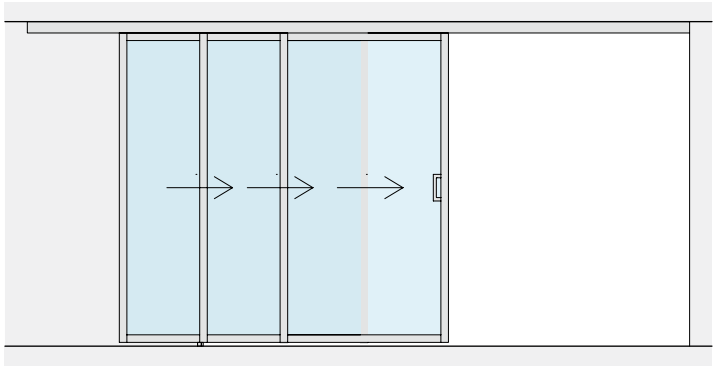

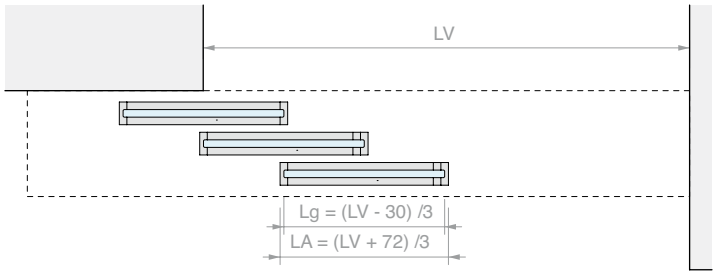
LV
Lg = (LV - 30) /3
LA = (LV + 72) /3

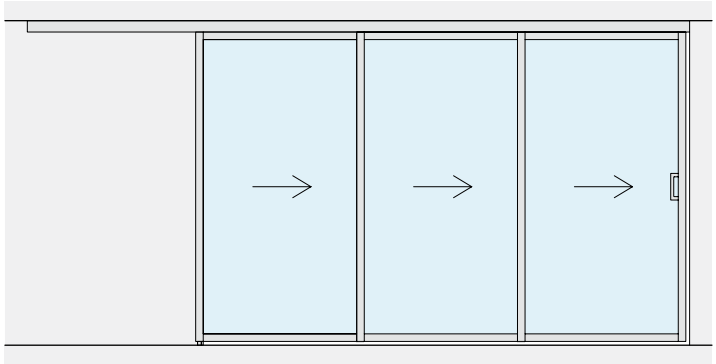

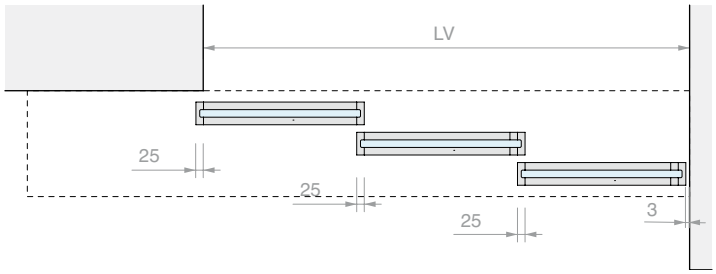
LV
25
25
25
3

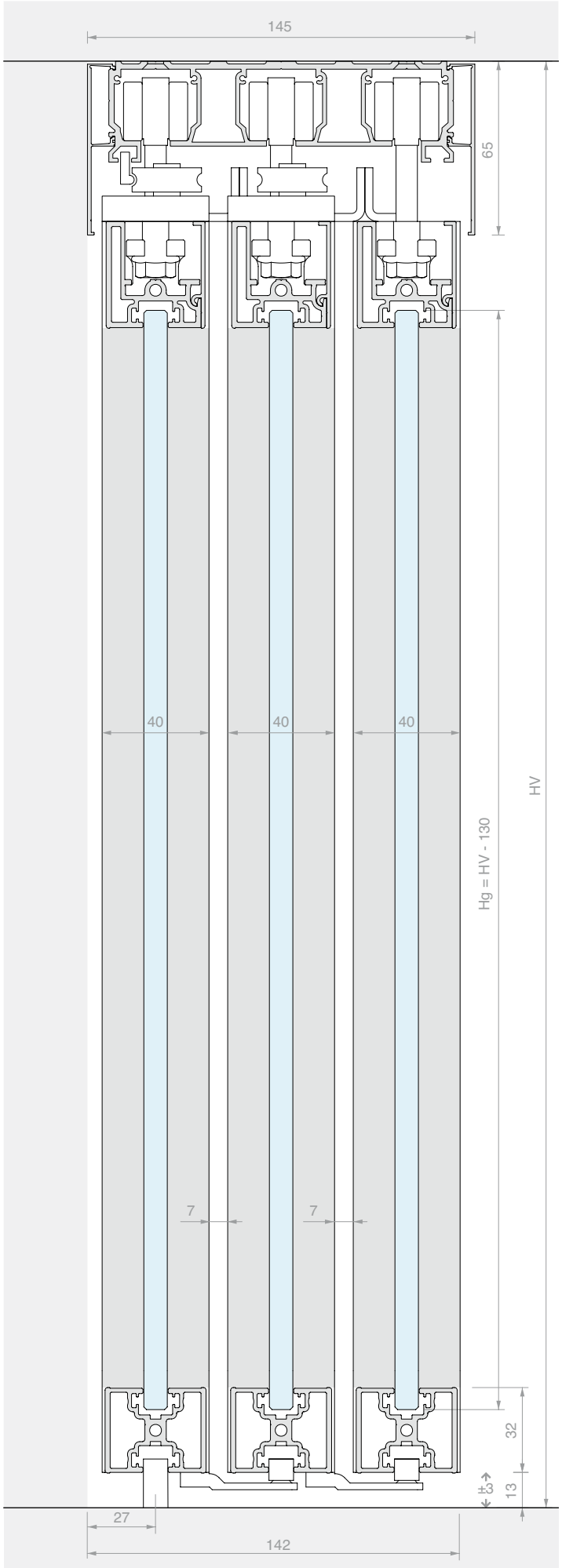
145
65
40
40
40
HV
Hg = HV - 130
7
7
32
3
13
27
142

SLIDING DOOR KIT WITH FRAME, CEILING FIXING TRIPLE DRAGGING DOOR AND FIXED GLASS

Material: Aluminium
Finish: /6 /88 /97

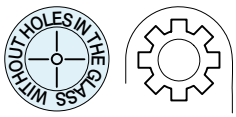

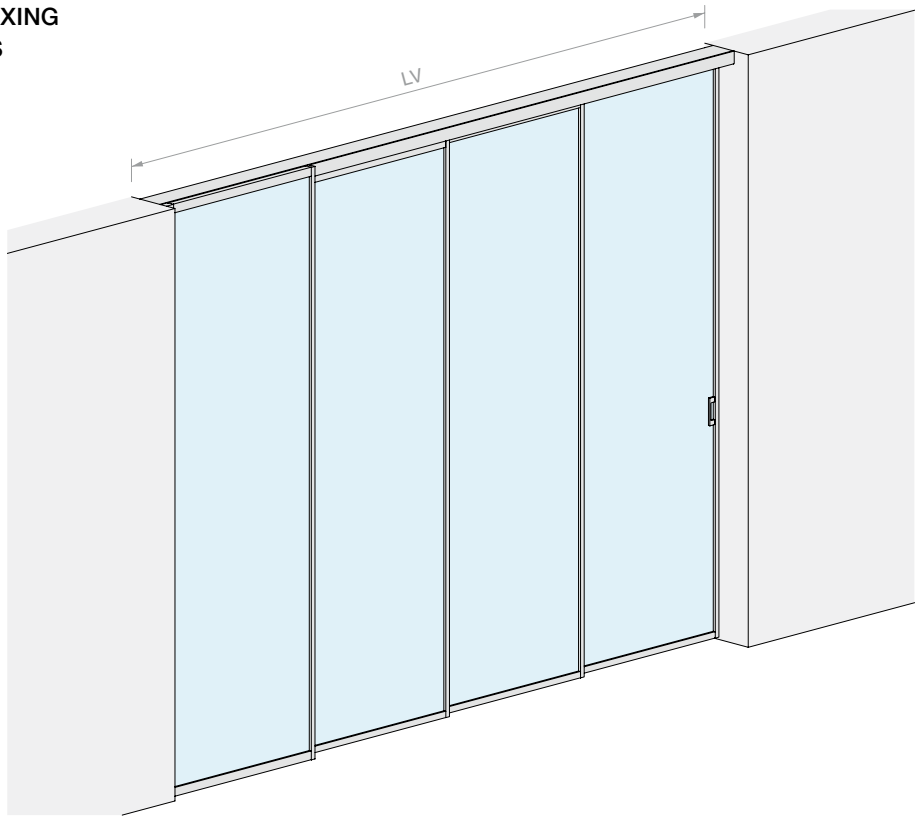

DOOR OPENING SIZE

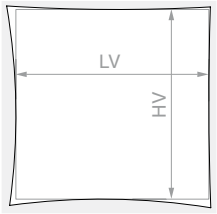

HV max: **3000** mm

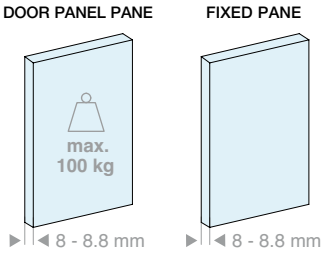

Kit comprising:

Art.	Description	Qty
LMINT-PCOV30.100	Sliding door panel kit with cover	2 Pcs
LMINT-PGUA30.100	Sliding door panel kit with gasket	1 Pc
LMINT-VFIX30.100	Framed fixed glass kit	1 Pc
LM3V129.400	3-way ceiling fixing track	1 Pc
FOU1013.30	U profile	1 Pc
LMCA065.400	Open cover for track	2 Pcs
057.3073.072	End stop with buffer	2 Pcs
057.3073.071	End stop without buffer	4 Pcs
LMSIN-3AT31	Synchronism kit for 3 dragging doors	1 Pc
HAND32140VHB	Adhesive handle	2 Pcs

Optional

042.3102.071	Softbreak damper, for panels from 30 to 55 kg	1 or 2 Pcs

Art.	LV max	Qty
LMT6513F.400	**4000** mm	1 Pc

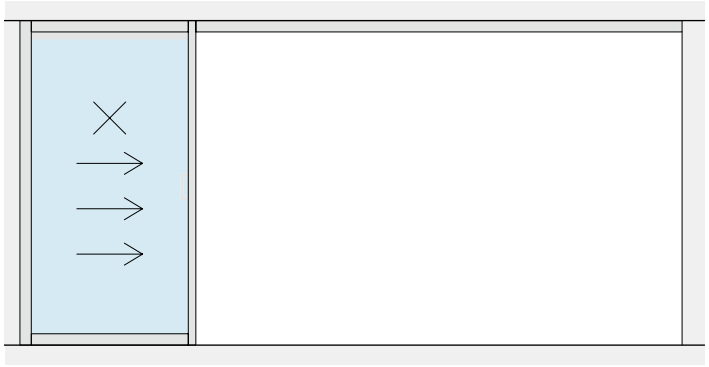

LF
LP

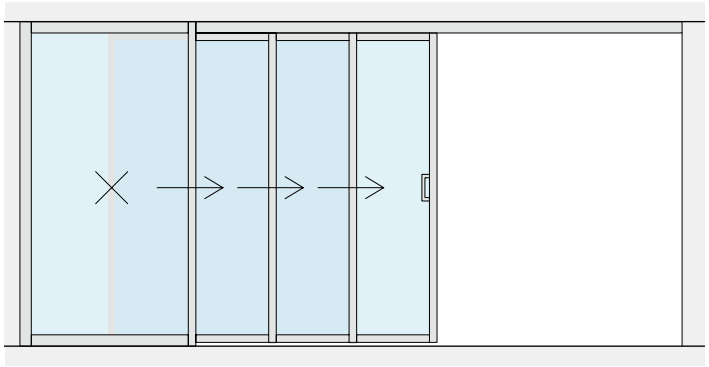

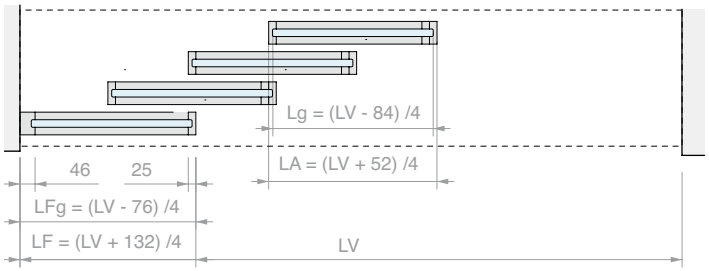
Lg = (LV - 84) /4
LA = (LV + 52) /4
46
25
LFg = (LV - 76) /4
LF = (LV + 132) /4
LV

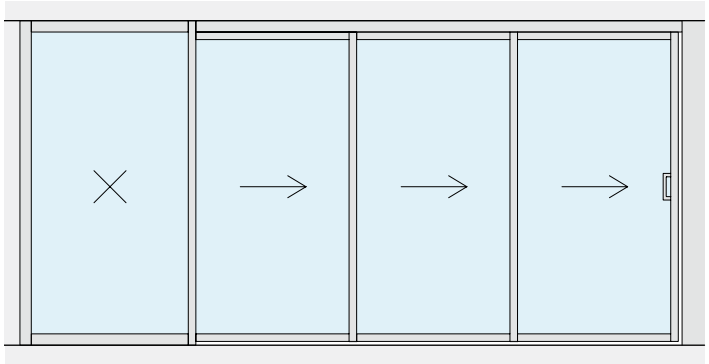

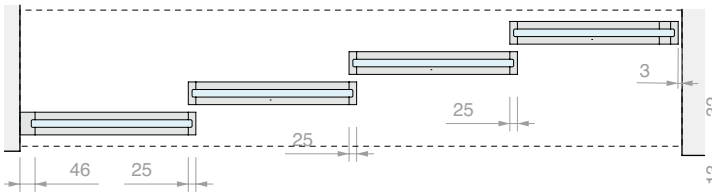
3
25
25
46
25

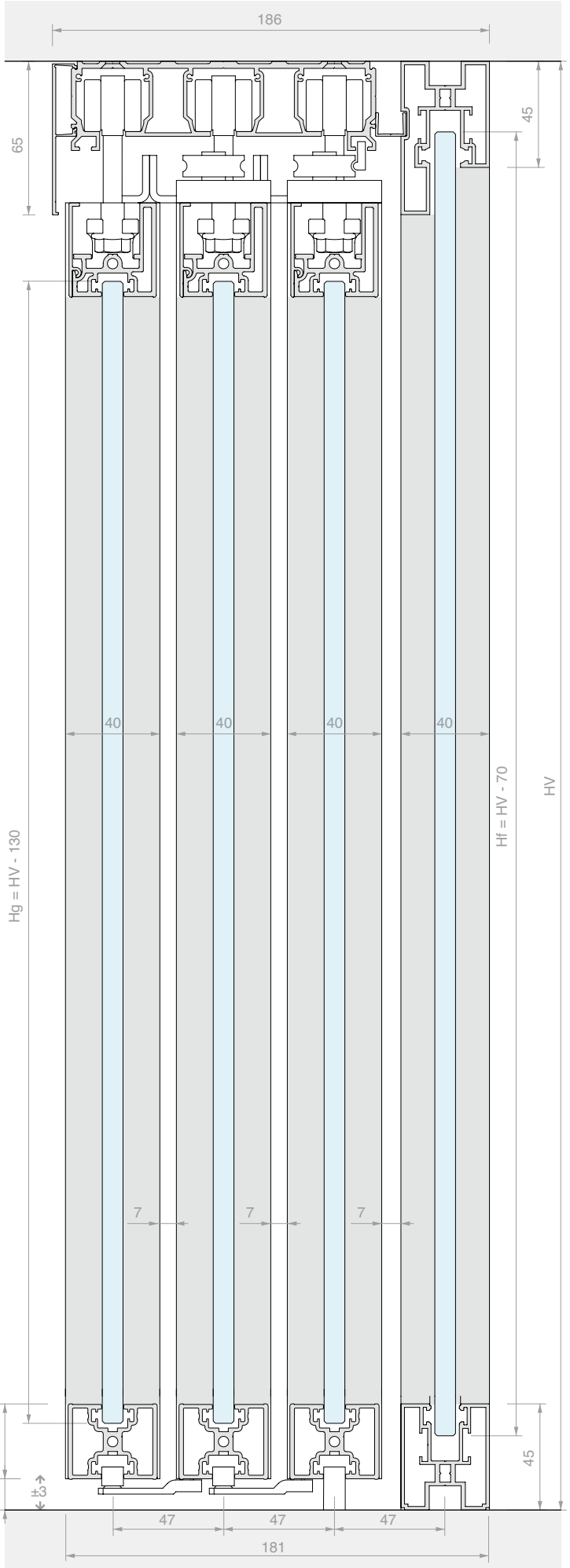
186
65
45
40
40
40
40
Hg = HV - 130
Hf = HV - 70
HV
7
7
7
32
13
±3
45
47
47
47
181

WHITE

SLIDING DOOR KIT WITH FRAME, WALL FIXING
SINGLE DOOR

Material: Aluminium
Finish: /6 /88 /97

WITHOUT HOLES IN THE GLASS

DOOR OPENING SIZE

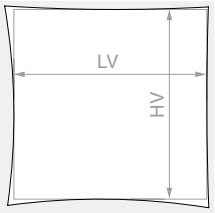

HV max: **3000** mm

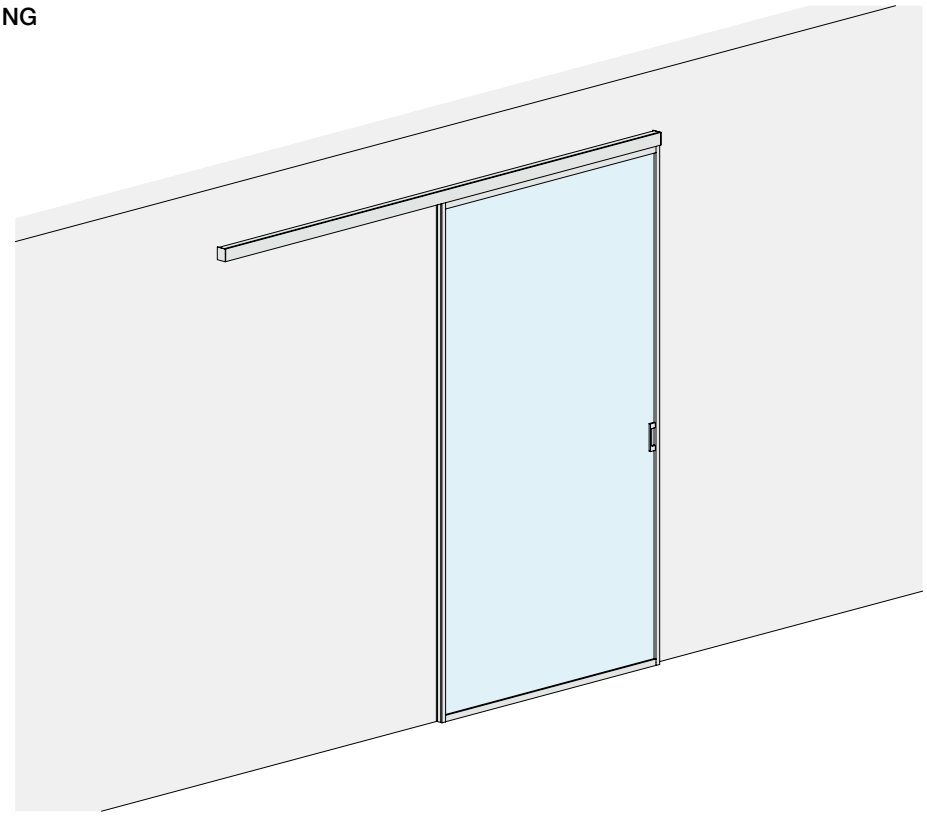

DOOR PANEL PANE

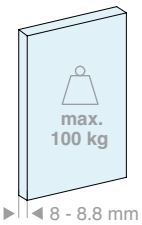

DOOR PANEL PANE

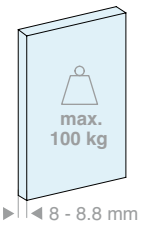

Kit comprising:

Art.	Description	Qty
LMINT-PCOV30.100	Sliding door panel kit with cover	1 Pc
LM04855.200	Wall fixing track	1 Pc
LMCC065.200	Open cover for track	1 Pc
LM64055TP33	Finishing cap	2 Pcs
057.3073.072	End stop with buffer	2 Pcs
LMINT-GT915	Floor guide	1 Pc
HAND32140VHB	Adhesive handle	2 Pcs
Optional		
042.3102.072	Softbreak damper, 20-60 kg	1 Pc
042.3102.071	Softbreak damper, 61-100 kg	1 Pc

Kit comprising:

Art.	Description	Qty
LMINT-PCOV30.150	Sliding door panel kit with cover	1 Pc
LM04855.300	Wall fixing track	1 Pc
LMCC065.300	Open cover for track	1 Pc
LM64055TP33	Finishing cap	2 Pcs
057.3073.072	End stop with buffer	2 Pcs
LMINT-GT915	Floor guide	1 Pc
HAND32140VHB	Adhesive handle	2 Pcs
Optional		
042.3102.072	Softbreak damper, 20-60 kg	1 Pc
042.3102.071	Softbreak damper, 61-100 kg	1 Pc

Art.	LV max	Qty
LMT6521.200	**950** mm	1 Pc

Art.	LV max	Qty
LMT6521.300	**1450** mm	1 Pc

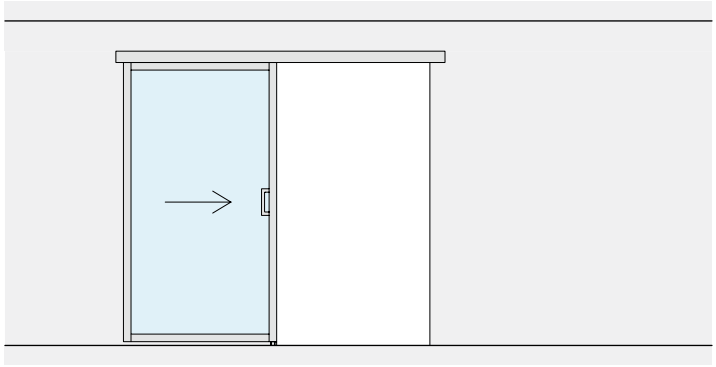

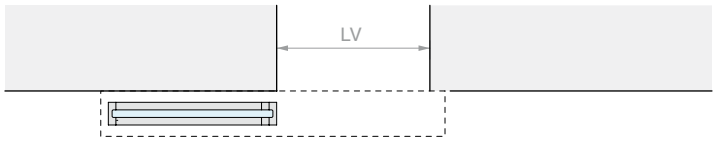
LV

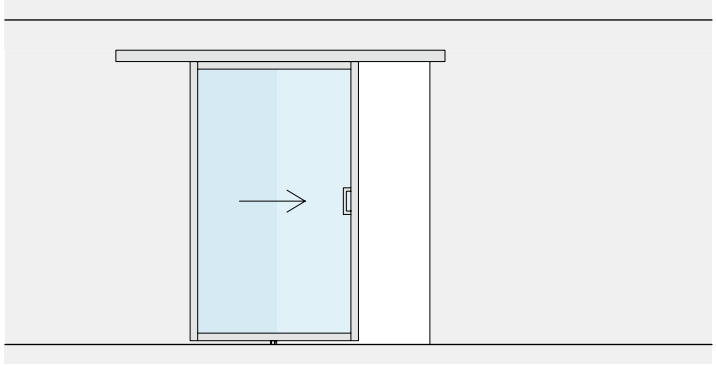

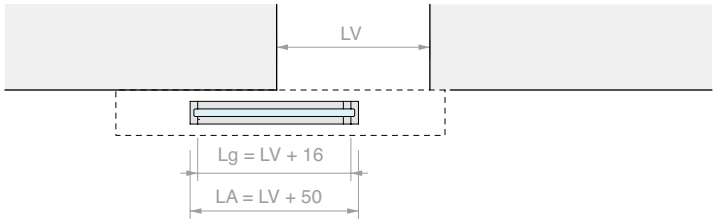
LV
Lg = LV + 16
LA = LV + 50

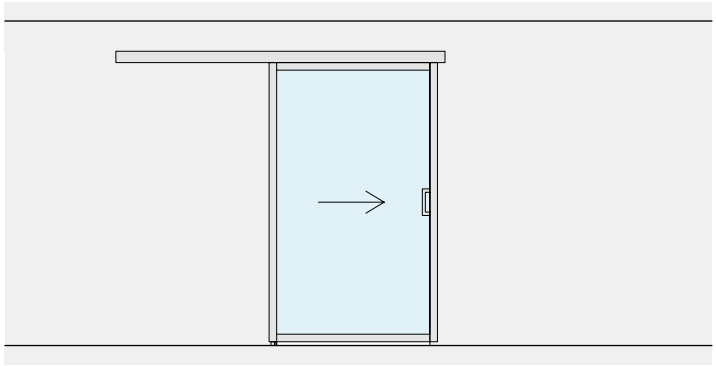

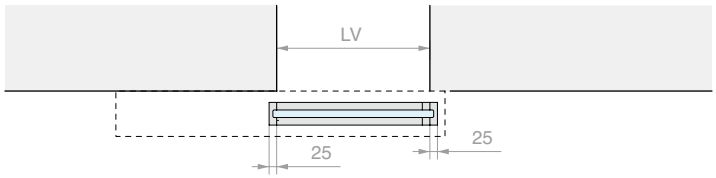
LV
25
25

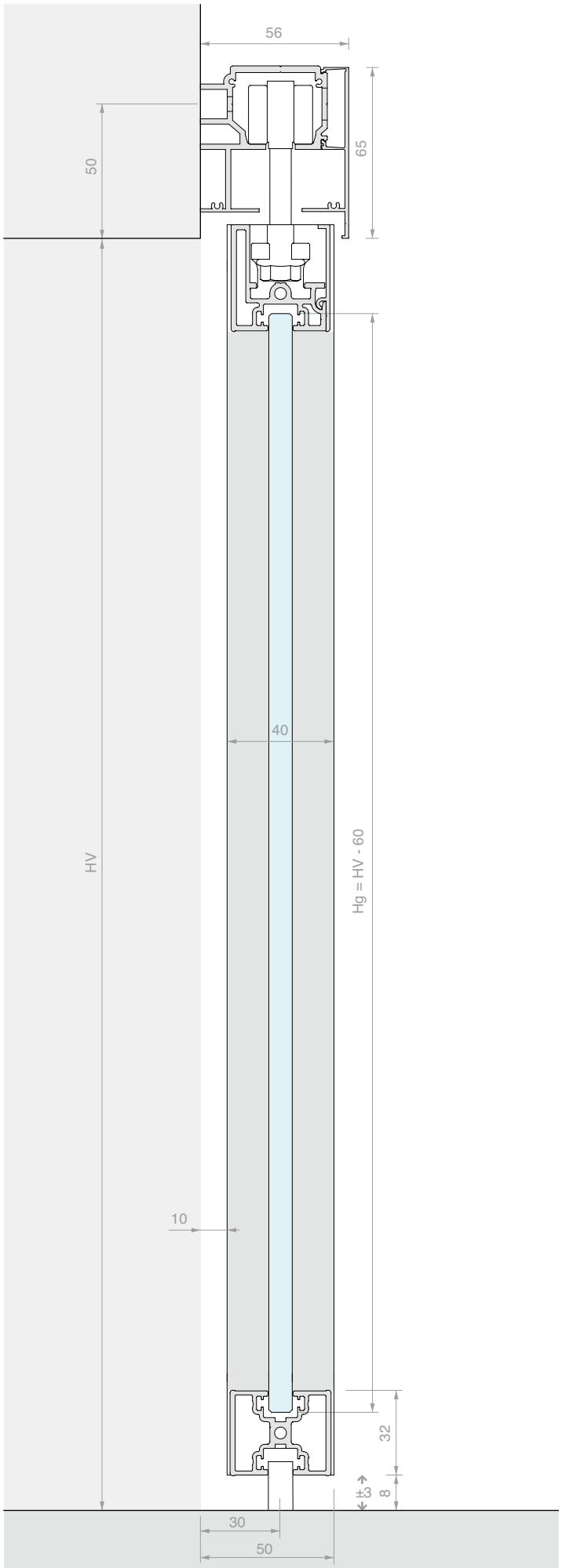
56
50
65
40
HV
Hg = HV - 60
10
32
±3
8
30
50

SLIDING DOOR KIT WITH FRAME, WALL FIXING
DOUBLE SYNCHRONISED DOOR

Material: Aluminium
Finish: /6 /88 /97

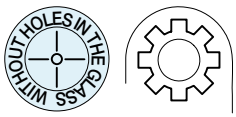

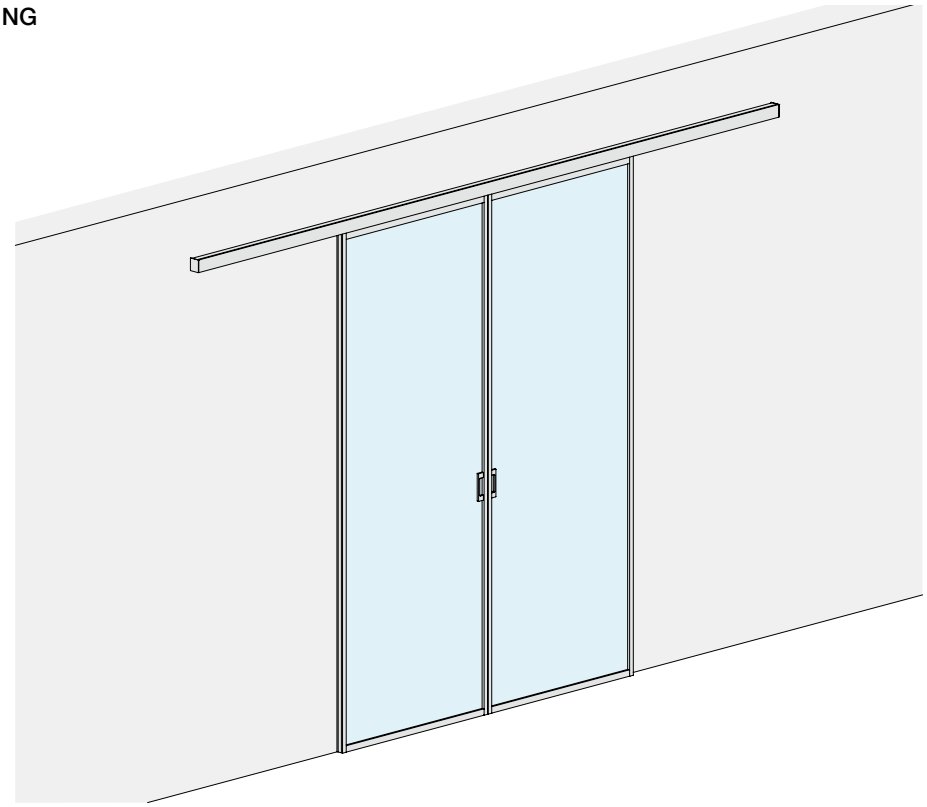

DOOR OPENING SIZE

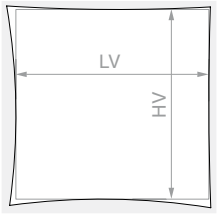

HV max: **3000** mm

DOOR PANEL PANE

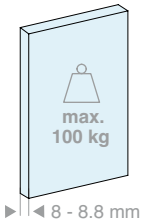

Kit comprising:

Art.	Description	Qty
LMINT-PGUA30.100	Sliding door panel kit with gasket	2 Pcs
LM04855.400	Wall fixing track	1 Pc
LMCA065.400	Open cover for track	1 Pc
LM64055TP33	Finishing cap	2 Pcs
057.3073.071	End stop without buffer	4 Pcs
LMSIN-2AC11	Synchronism kit for 2 in-line door panels	1 Pc
HAND32140VHB	Adhesive handle	4 Pcs

Optional

042.3102.072	Softbreak damper, 20-60 kg	1 Pc
042.3102.071	Softbreak damper, 61-100 kg	1 Pc

Art.	LV max	Qty
LMT6521.400	**1970** mm	1 Pc

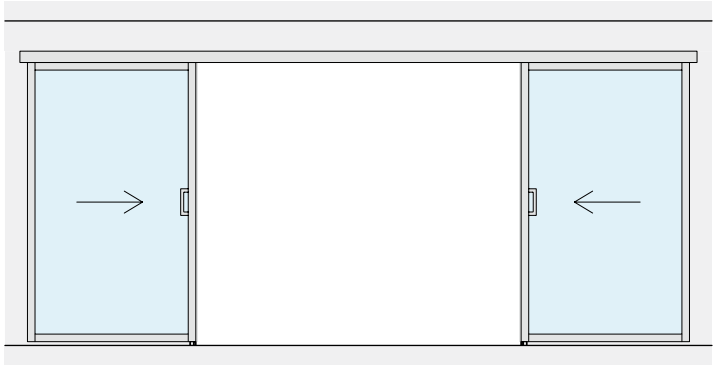

LV

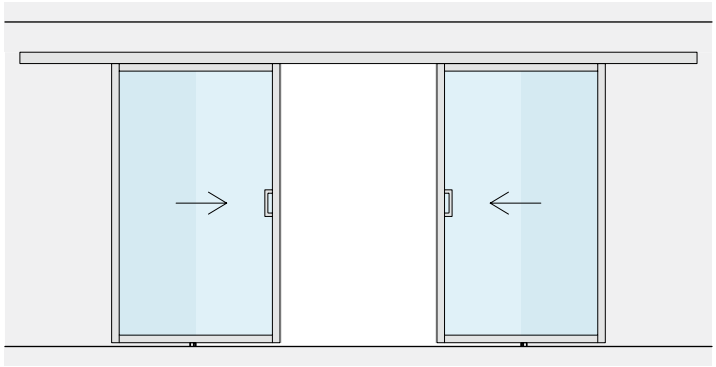

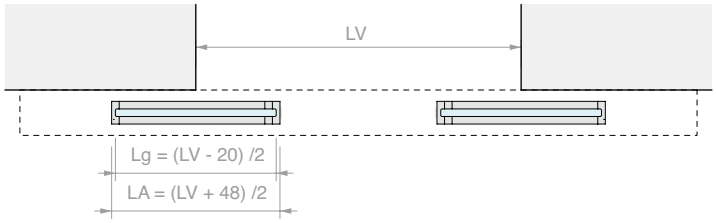
LV
Lg = (LV - 20) /2
LA = (LV + 48) /2

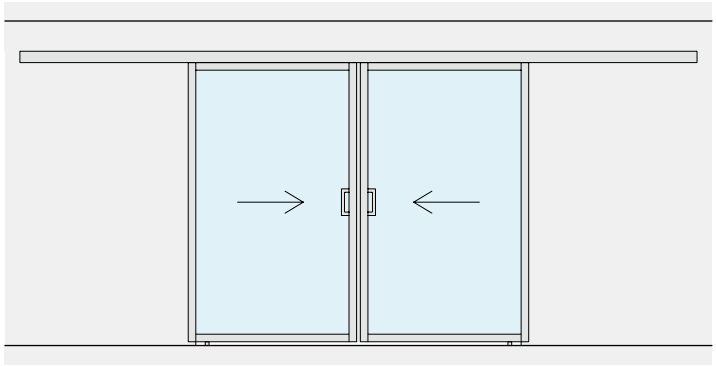

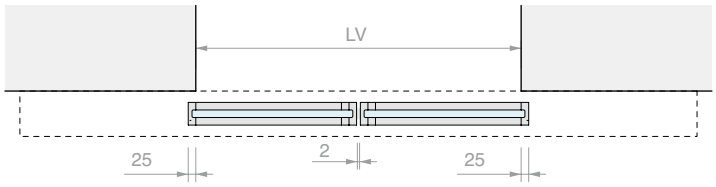
LV
25
2
25

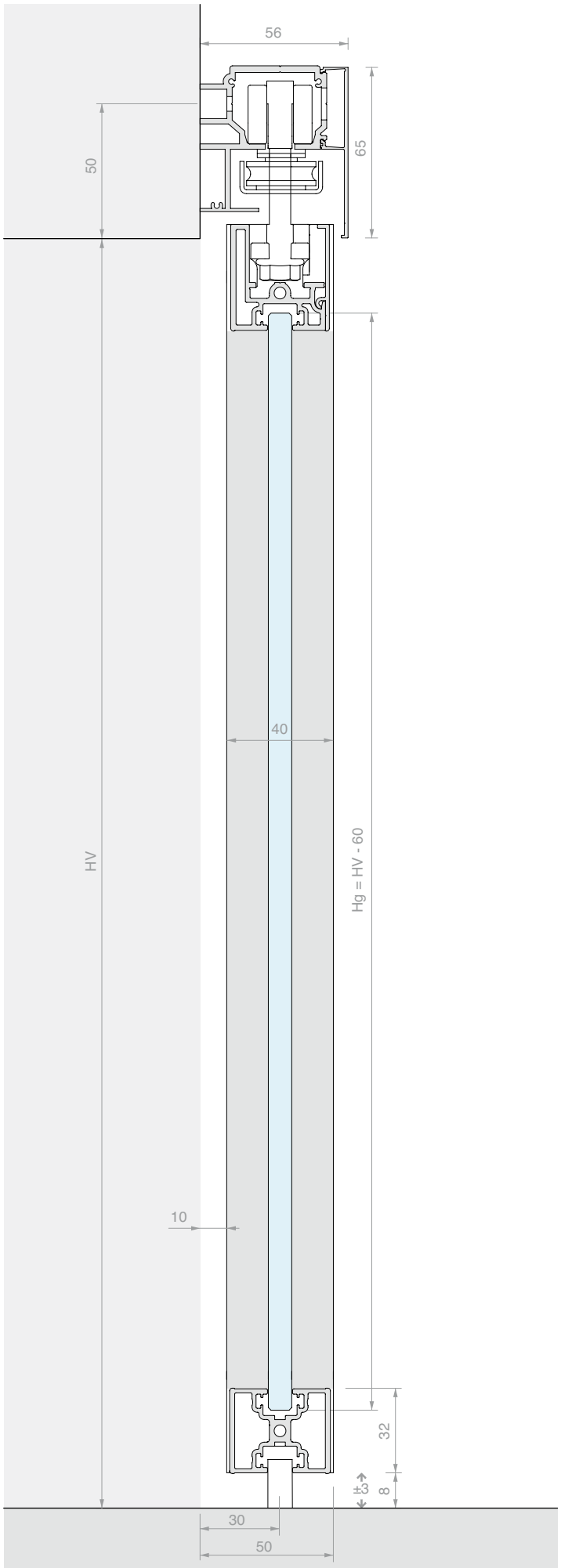
56
50
65
40
HV
Hg = HV - 60
10
32
±3
8
30
50

SLIDING DOOR KIT WITH FRAME AND COVER OR SIDE GASKET

Material: Aluminium

Finish: /6 /88 /97

WITHOUT HOLES IN THE GLASS

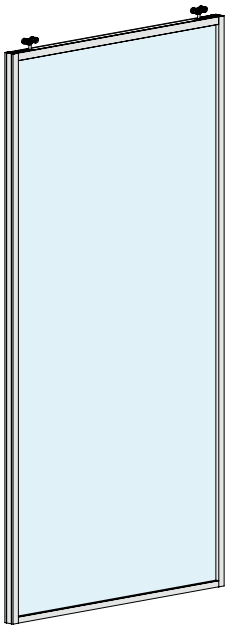

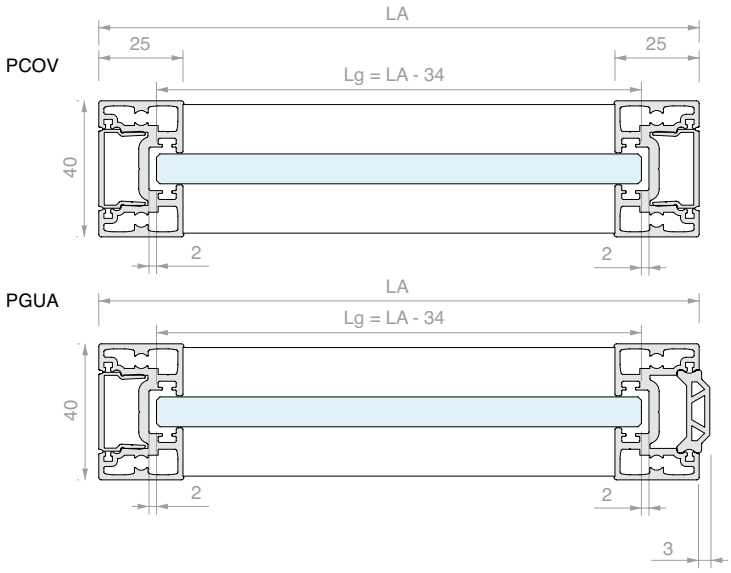

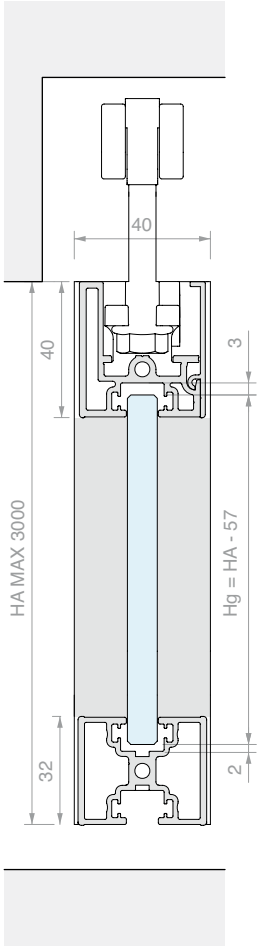

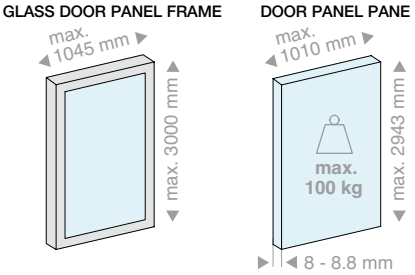

Kit comprising:

Art.	Description	Qty
LM36040.100	Upper crosspiece	1 Pc
LM0040C.100	Cover for upper crosspiece	1 Pc
LM32040.100	Crosspiece for panel	1 Pc
LM25040.300	Side column	2 Pcs
LM0023C.300	Side cover	1 or 2 Pcs
REGTERGUA	Sealing gasket	3 Pcs
LMINT-AM11	Installation kit	1 Pc
CARVIT8X50-A2	Roller with screw and nut	2 Pcs

Only in PGUA kit with gasket

GB01.30	Door striking gasket	1 Pc

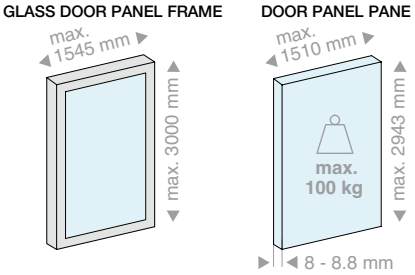

Kit comprising:

Art.	Description	Qty
LM36040.150	Upper crosspiece	1 Pc
LM0040C.150	Cover for upper crosspiece	1 Pc
LM32040.150	Crosspiece for panel	1 Pc
LM25040.300	Side column	2 Pcs
LM0023C.300	Side cover	1 or 2 Pcs
REGTERGUA	Sealing gasket	3 Pcs
LMINT-AM11	Installation kit	1 Pc
CARVIT8X50-A2	Roller with screw and nut	2 Pcs

Only in PGUA kit with gasket

GB01.30	Door striking gasket	1 Pc

Art.	LA max	Qty
LMINT-PCOV30.100	**1045** mm	1 Pc
LMINT-PGUA30.100	**1045** mm	1 Pc

Art.	LA max	Qty
LMINT-PCOV30.150	**1545** mm	1 Pc
LMINT-PGUA30.150	**1545** mm	1 Pc

FRAMED FIXED GLASS KIT

Material: Aluminium
Finish: /6 /88 /97

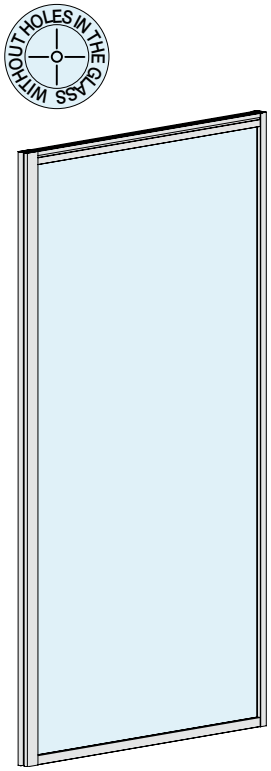

VFIX

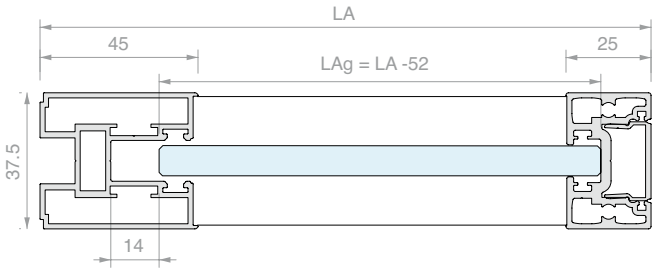

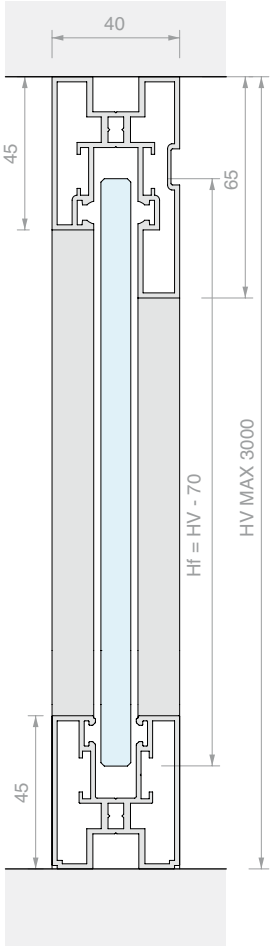

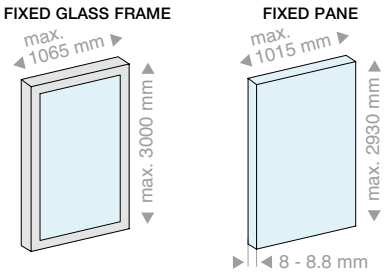

Kit comprising:

Art.	Description	Qty
LM38065.100	Upper crosspiece	1 Pc
LM38045.100	Lower crosspiece	1 Pc
LM40045.300	Vertical column	1 Pc
LM25040.300	Side column	1 Pc
LM0023C.300	Side cover	1 Pc
REGTERGUA	Sealing gasket	1 Pc
GP77	Sealing gasket	10 m
VIT7981-4.8X60-ZN	Fixing screw	4 Pcs

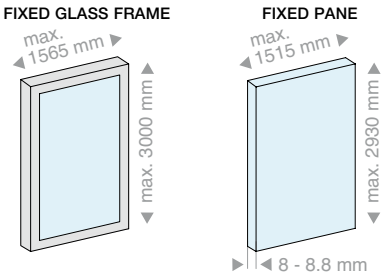

Kit comprising:

Art.	Description	Qty
LM38065.150	Upper crosspiece	1 Pc
LM38045.150	Lower crosspiece	1 Pc
LM40045.300	Vertical column	1 Pc
LM25040.300	Side column	1 Pc
LM0023C.300	Side cover	1 Pc
REGTERGUA	Sealing gasket	1 Pc
GP77	Sealing gasket	12 m
VIT7981-4.8X60-ZN	Fixing screw	4 Pcs

Art.	LA max	Qty
LMINT-VFIX30.100	**1065** mm	1 Pc

Art.	LA max	Qty
LMINT-VFIX30.150	**1565** mm	1 Pc

CEILING FIXING SINGLE TRACK

Material: Aluminium

Finish: /6 /88 /97

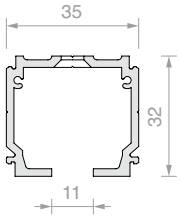

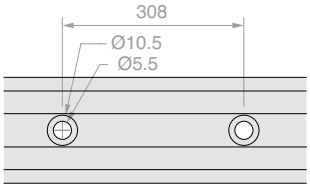

Art.	Length	Qty
LM21.200	**1998** mm	1 Pc
LM21.300	**2998** mm	1 Pc
LM21.400	**3998** mm	1 Pc
LM21.600	**6000** mm	1 Pc

WALL FIXING TRACK

Material: Aluminium

Finish: /6 /88 /97

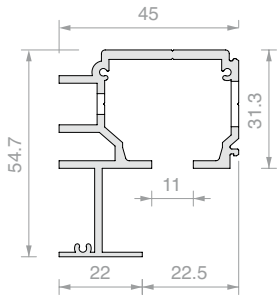

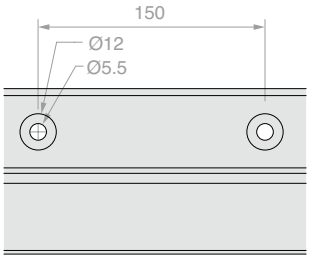

Art.	Length	Qty
LM04855.200	**1998** mm	1 Pc
LM04855.300	**2998** mm	1 Pc
LM04855.400	**3998** mm	1 Pc
LM04855.600	**6000** mm	1 Pc

2-WAY CEILING FIXING TRACK

Material: Aluminium

Finish: /6

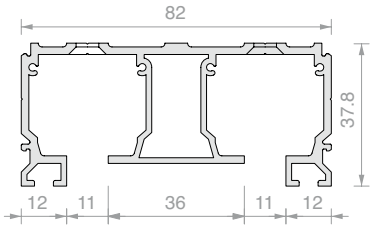

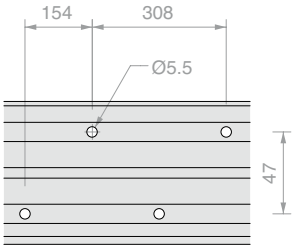

Art.	Length	Qty
LM2V082.200	**1998** mm	1 Pc
LM2V082.300	**2998** mm	1 Pc
LM2V082.400	**3998** mm	1 Pc
LM2V082.600	**6000** mm	1 Pc

3-WAY CEILING FIXING TRACK

Material: Aluminium

Finish: /6

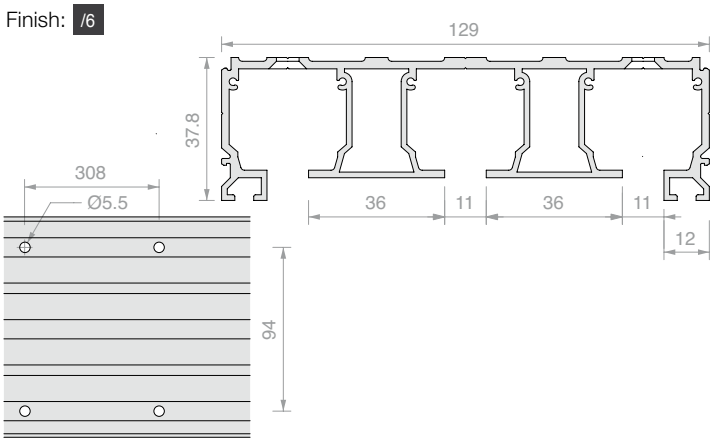

Art.	Length	Qty
LM3V129.200	**1998** mm	1 Pc
LM3V129.300	**2998** mm	1 Pc
LM3V129.400	**3998** mm	1 Pc
LM3V129.600	**6000** mm	1 Pc

UPPER CROSSPIECE FOR FIXED GLASS

Material: Aluminium

Finish: /6 /88 /97

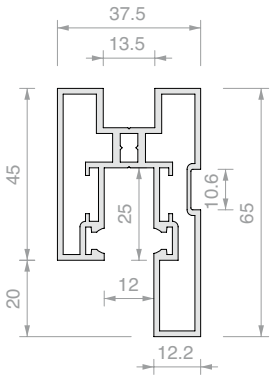

Art.	Length	Qty
LM38065.100	**996** mm	1 Pc
LM38065.150	**1498** mm	1 Pc
LM38065.300	**3000** mm	1 Pc

LOWER CROSSPIECE FOR FIXED GLASS

Material: Aluminium

Finish: /6 /88 /97

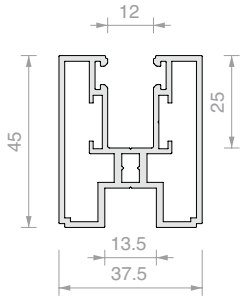

Art.	Length	Qty
LM38045.100	**996** mm	1 Pc
LM38045.150	**1498** mm	1 Pc
LM38045.300	**3000** mm	1 Pc

VERTICAL COLUMN FOR FIXED GLASS

Material: Aluminium

Finish: /6 /88 /97

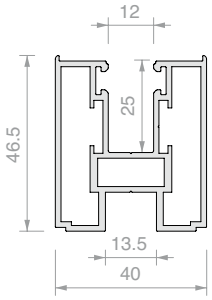

Art.	Length	Qty
LM40045.300	**3000** mm	1 Pc
LM40045.400	**4000** mm	1 Pc

UPPER CROSSPIECE FOR DOOR

Material: Aluminium

Finish: /6 /88 /97

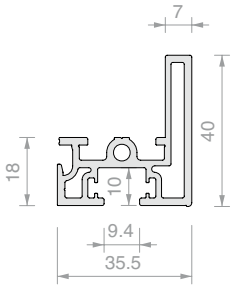

Art.	Length	Qty
LM36040.100	**996** mm	1 Pc
LM36040.150	**1498** mm	1 Pc
LM36040.300	**3000** mm	1 Pc

COVER FOR UPPER CROSSPIECE FOR DOOR

Material: Aluminium

Finish: /6 /88 /97

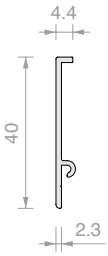

Art.	Length	Qty
LM0040C.100	**996** mm	1 Pc
LM0040C.150	**1498** mm	1 Pc
LM0040C.300	**3000** mm	1 Pc

CROSSPIECE FOR DOOR

Material: Aluminium

Finish: /6 /88 /97

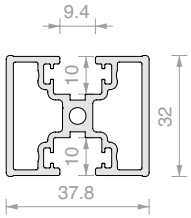

Art.	Length	Qty
LM32040.100	**996** mm	1 Pc
LM32040.150	**1498** mm	1 Pc
LM32040.300	**3000** mm	1 Pc

SIDE COLUMN FOR DOOR

Material: Aluminium

With machinings

Finish: /6 /88 /97

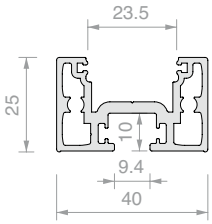

Art.	Length	Qty
LM25040.300	**3000** mm	1 Pc
LM25040.400	**4000** mm	1 Pc

FULL-LENGTH HANDLE PROFILE

Material: Aluminium

Finish: /6 /88 /97

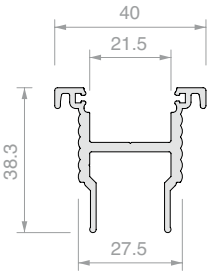

Art.	Length	Qty
LMC0038.300	**3000** mm	1 Pc
LMC0038.400	**4000** mm	1 Pc

FIXING KIT FOR FULL-LENGTH HANDLE PROFILE LMC0038

Art.	Qty
LMINT-AM22	1 Pc

SIDE COVER FOR DOOR

Material: Aluminium

Finish: /6 /88 /97

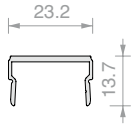

Art.	Length	Qty
LM0023C.300	**3000** mm	1 Pc
LM0023C.400	**4000** mm	1 Pc

U PROFILE

Material: Aluminium

Finish: /6 /88 /97

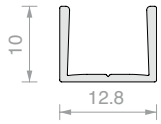

Art.	Length	Qty
FOU1013.30	**3000** mm	1 Pc

TRACK COVER

Material: Aluminium

Finish: /6 /88 /97

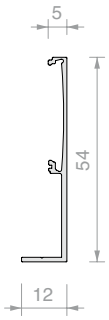

Art.	Length	Qty
LM0055C.200	**1998** mm	1 Pc
LM0055C.300	**2998** mm	1 Pc
LM0055C.400	**3998** mm	1 Pc
LM0055C.600	**6000** mm	1 Pc

OPEN COVER FOR TRACK

Material: Aluminium

Finish: /6 /88 /97

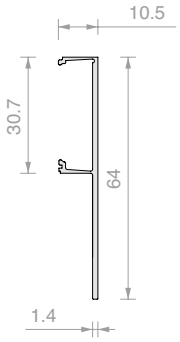

Art.	Length	Qty
LMCA065.100	**996** mm	1 Pc
LMCA065.150	**1496** mm	1 Pc
LMCA065.200	**1998** mm	1 Pc
LMCA065.300	**2998** mm	1 Pc
LMCA065.400	**3998** mm	1 Pc
LMCA065.600	**6000** mm	1 Pc

CLOSED COVER FOR TRACK

Material: Aluminium

Finish: /6 /88 /97

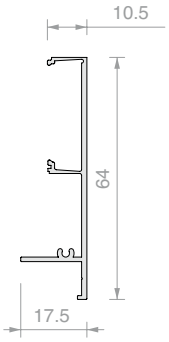

Art.	Length	Qty
LMCC065.100	**996** mm	1 Pc
LMCC065.150	**1496** mm	1 Pc
LMCC065.200	**1998** mm	1 Pc
LMCC065.300	**2998** mm	1 Pc
LMCC065.400	**3998** mm	1 Pc
LMCC065.600	**6000** mm	1 Pc

FINISHING CAP 2 SCREWS

Material: Aluminium

Finish: /6 /88 /97

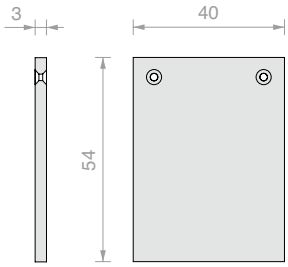

Art.	Qty
LM54040TP32	1 Pc

FINISHING CAP 2 SCREWS

Material: Aluminium

Finish: /6 /88 /97

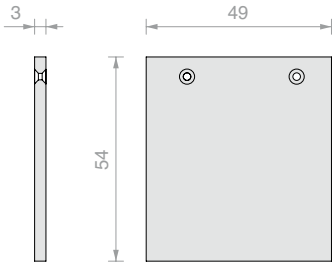

Art.	Qty
LM54049TP32	1 Pc

FINISHING CAP 3 SCREWS

Material: Aluminium

Finish: /6 /88 /97

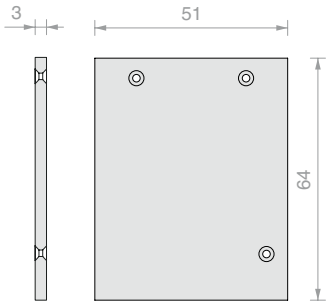

Art.	Qty
LM64051TP33	1 Pc

FINISHING CAP 3 SCREWS

Material: Aluminium

Finish: /6 /88 /97

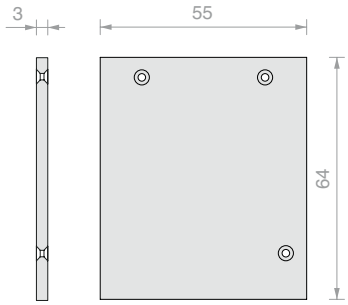

Art.	Qty
LM64055TP33	1 Pc

FINISHING CAP 2 SCREWS

Material: Aluminium

Finish: /6 /88 /97

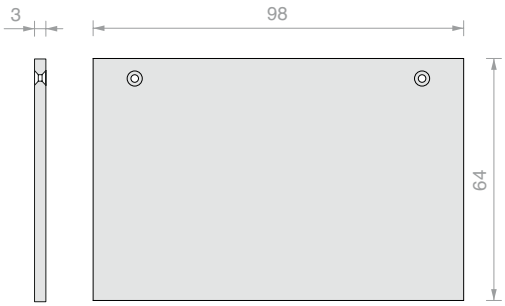

Art.	Qty
LM64098TP33	1 Pc

FINISHING CAP 2 SCREWS

Material: Aluminium

Finish: /6 /88 /97

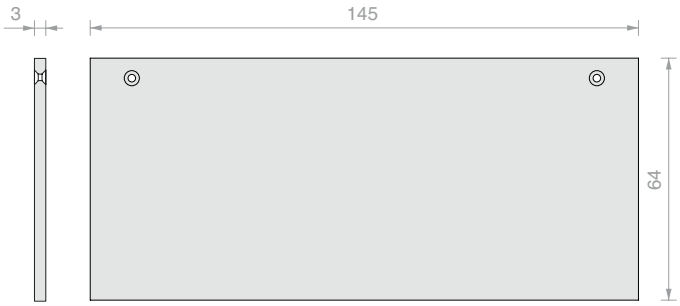

Art.	Qty
LM64145TP33	1 Pc

DOOR STRIKING GASKET

Material: TPE

Finish: /6

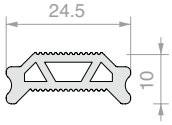

Art.	Length	Qty
GB01.30	**3000** mm	1 Pc

SEALING GASKET WITH LIP

Material: TPE

Colour: Transparent

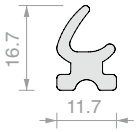

Art.	Length	Qty
REGTERGUA	**3000** mm	1 Pc

BALLOON SEALING GASKET

Material: TPE

Finish: /6

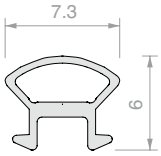

Art.	Qty
GP77	1 m

SINGLE DOOR INSTALLATION KIT LMINT.ME.222

Art.	Qty
LMINT-AM11	1 Pc

CONNECTING SCREW FOR CROSSPIECES AND COLUMNS

Material: galvanised steel

Art.	Dimensions	Qty
VIT7981-4.8X38-ZN	**4.8** mm x **38** mm	1 Pc
VIT7981-4.8X60-ZN	**4.8** mm x **60** mm	1 Pc

ROLLER WITH SCREW AND NUT

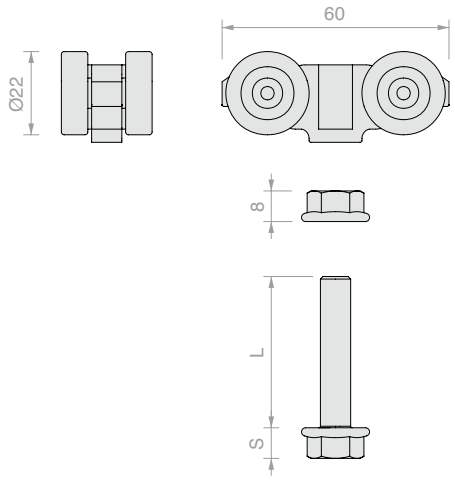

Art.	L	S	For clamps	Qty
CARVIT8X50-A2	**50** mm	**8** mm	CERPOS514	1 Pc
CARVIT8X40-A2	**40** mm	**8** mm	CERPOS514	1 Pc
057.3114.071	**32** mm	**5** mm	CERPOS170	1 Pc

END STOP WITH BUFFER

Material: ABS

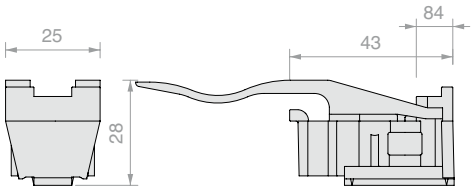

Art.	Q.ty
057.3073.072	1 Pc

END STOP WITHOUT BUFFER

Material: ABS

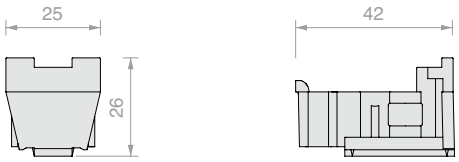

Art.	Q.ty
057.3073.071	1 Pc

SOFTBREAK DAMPER

Material: ABS, zamak and steel

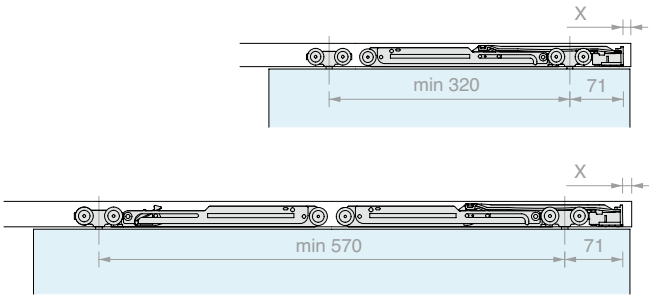

Art.	Load	Qty
042.3102.072	From **20** to **60** kg	1 Pc
042.3102.071	From **61** to **100** kg	1 Pc

SLOT COVER

Material: ABS

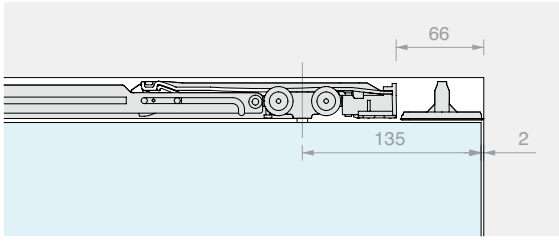

Art.	Qty
042.3114.071	1 Pc

MACHINING FOR SLOT ON PROFILE

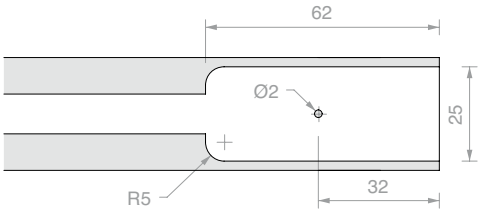

Art.	Qty
LMTAS	1 Pc

SYNCHRONISATION FOR 2 IN-LINE DOOR WITH FLOOR GUIDE

Art.	Qty
LMSIN-2AC11	1 Pc

SYNCHRONISATION FOR 2 DRAGGING DOORS WITH FLOOR GUIDE

Art.	Qty
LMSIN-2AT21	1 Pc

SYNCHRONISATION FOR 3 DRAGGING DOORS WITH FLOOR GUIDE

Art.	Qty
LMSIN-3AT31	1 Pc

FLOOR GUIDE

Material: POM, ABS and steel

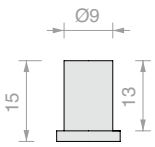

Art.	Qty
LMINT-GT915	1 Pc

HANDLE

Material: Aluminium

Finish: /88 /97 /R2

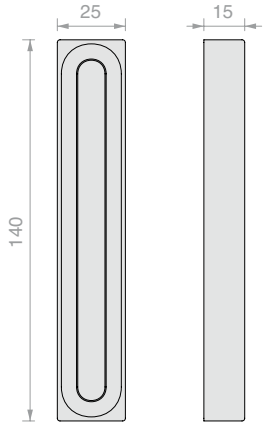

Art.	Qty
MFM14025	1 Pc

“C” HANDLE

Material: Aluminium

Finish: /88 /97 /R2

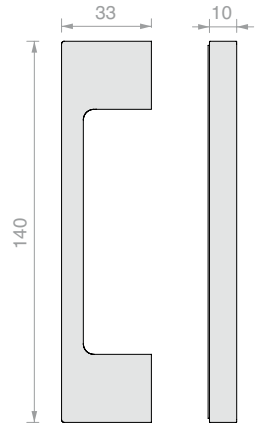

Art.	Qty
HAND32140VHB	1 Pc

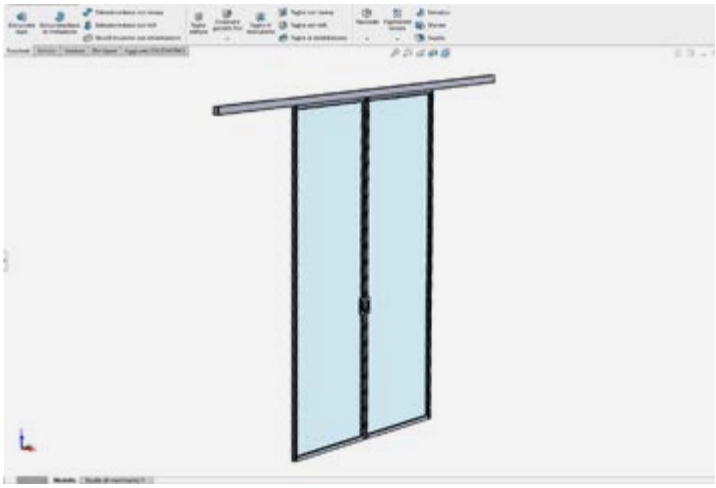

CALCULATION AND CUSTOM CUTTING FULLY FRAMED SYSTEM

Art.	Qty
LMTCUT	1 Pc

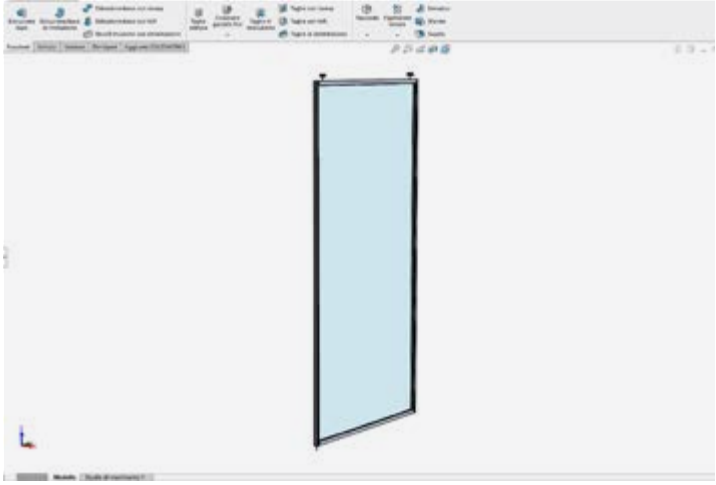

CALCULATION AND CUSTOM CUTTING SINGLE FRAMED DOOR

Art.	Qty
LMTCUTDR	1 Pc

LM PORTA PRO

Design

Essential, developed, amazing.
LM PORTA PRO is a sliding system that combines **clean design, project versatility and high technical performance**.
Square lines, harmonious proportions and optimised profiles blend perfectly into any environment, creating an elegant, contemporary solution.

The heart of the system, **a compact 62 x 64 mm rail** and a **new clamp made entirely of aluminium**, designed for reliability and durability. The result? **Tested performance of up to 45,000 opening and closing cycles**, for intensive and always smooth use.

The LM PORTA identity remains easily recognisable:
Wall or ceiling mounting
Configurations with or without fixed glass
A single damper per door ensures smooth and silent movement both when opening and closing

LM PORTA PRO
The complete system designed to last.

/6
Matt black

/88
Brushed steel effect aluminium

/97
Matt aluminium

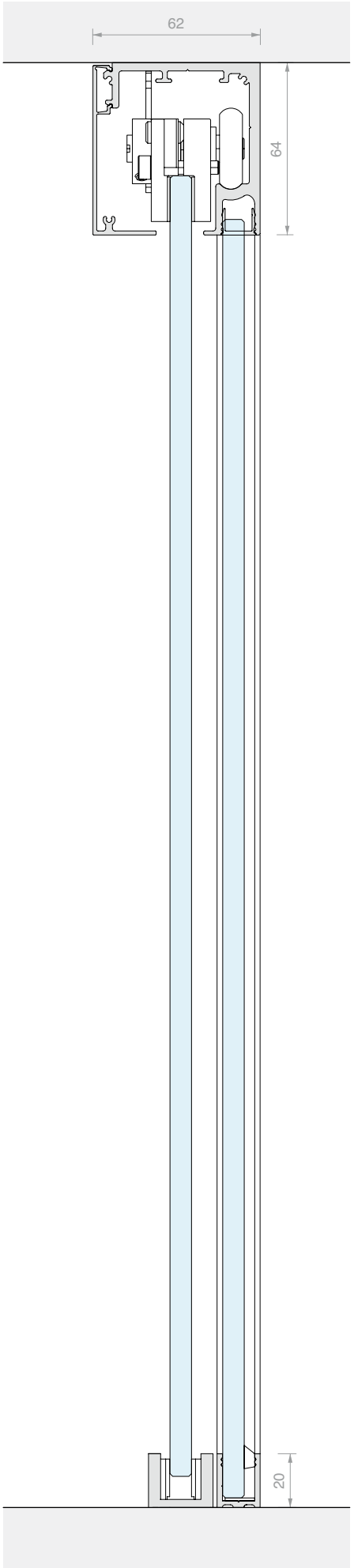

Tested according to UNI EN 1527

Doors of 100 kg over **45,000 cycles**

Slam test **GRADE 3** (maximum grade)

Horizontal load **GRADE 3** (maximum grade)

Passes overload test over **200 kg**

LM PORTA PRO

Technical properties

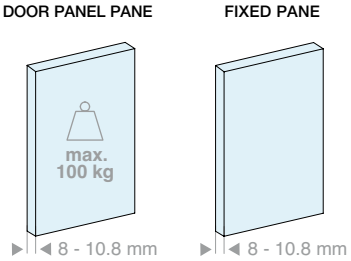

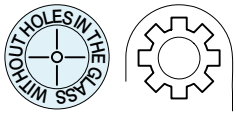

2 types of installation

Ceiling

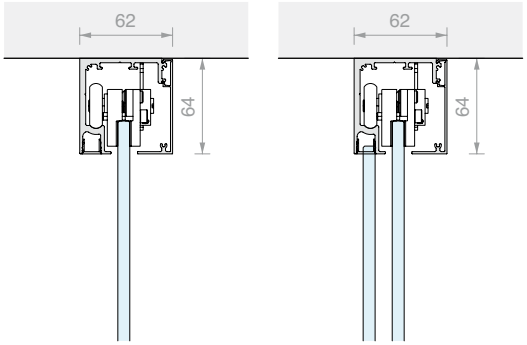

1 way

1 way + fixed

Wall

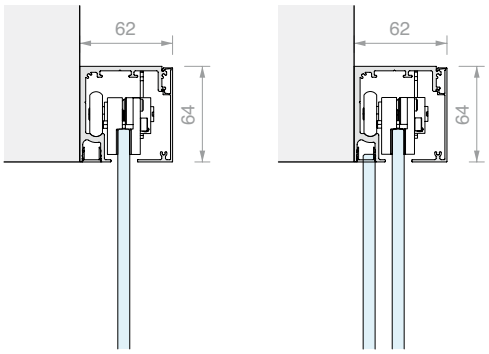

1 way

1 way + fixed

cover h = 63 mm

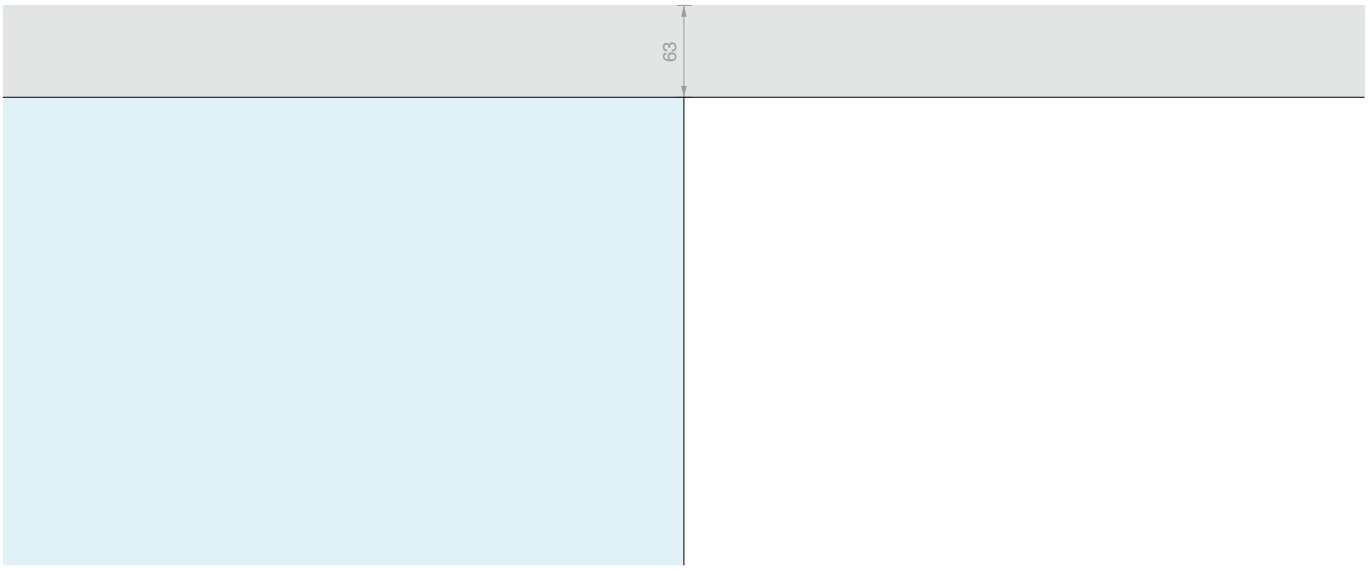

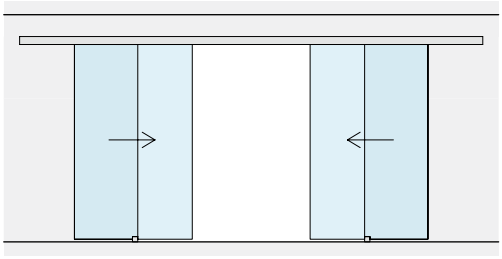

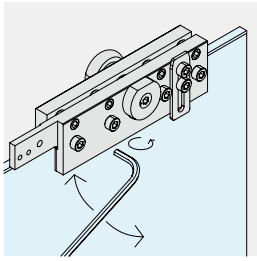

DOOR PANEL ADJUSTMENT
The height of the individual roller
can be adjusted to
change the position of the door panel by ±3 mm.

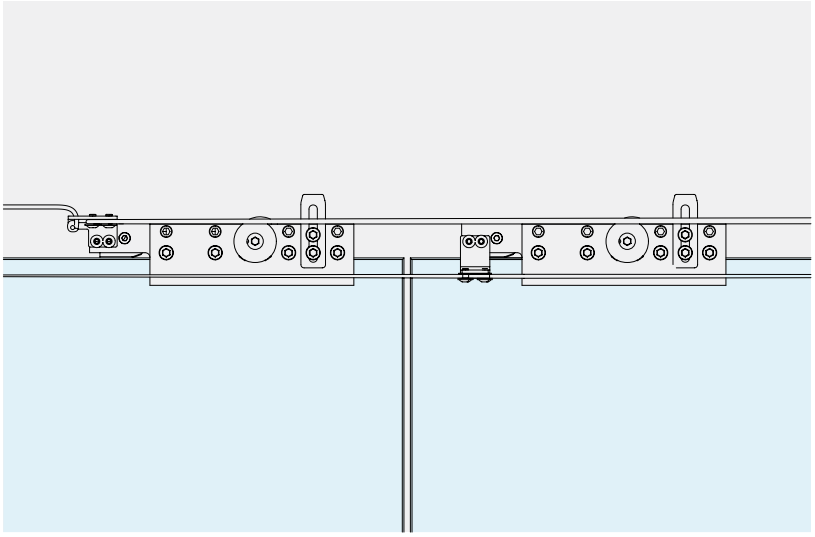

SYNCHRONISM
The following accessories are available for synchronisation
simultaneous with 2 moving door panels.

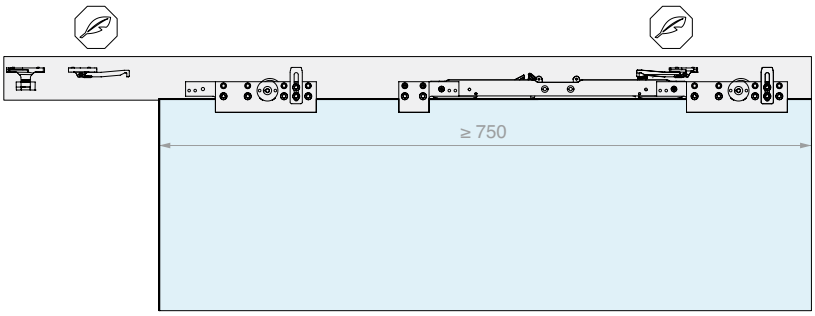

SOFT CLOSE
The use of a single damper delivers
delicate and controlled opening and closing.

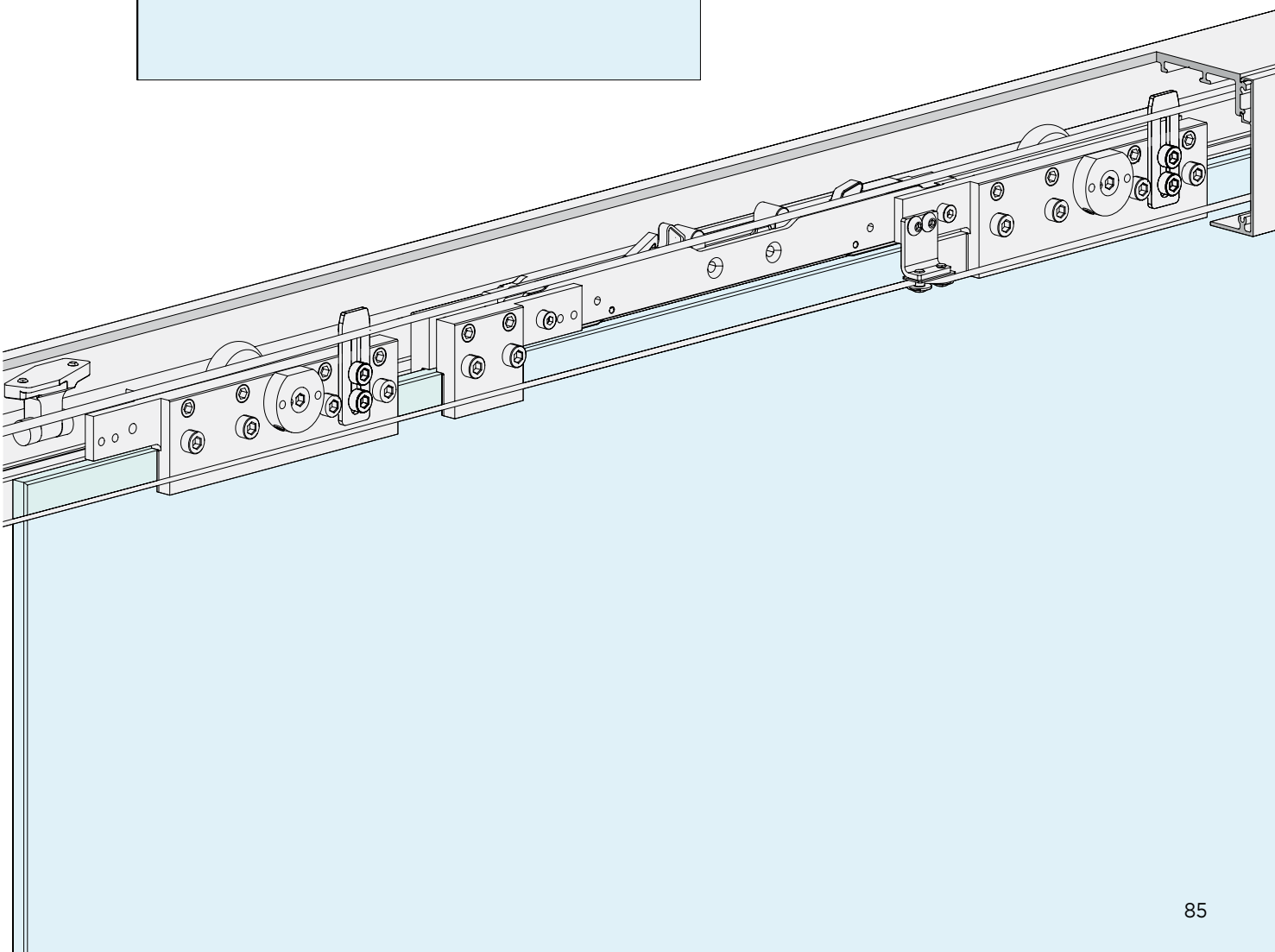

LM PORTA PRO

Kit

CEILING FIXING

MOVING DOORS

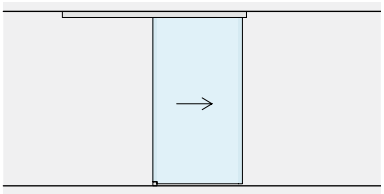

Page 90

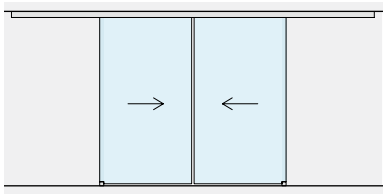

Page 94

MOVING DOORS
WITH FIXED GLASS

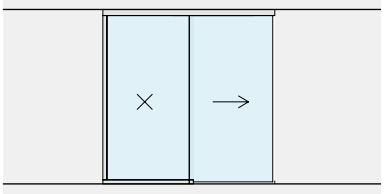

Page 98

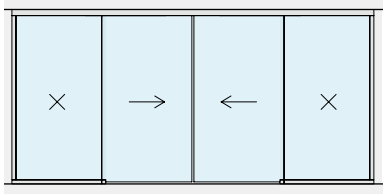

Page 102

WALL FIXING

MOVING DOORS

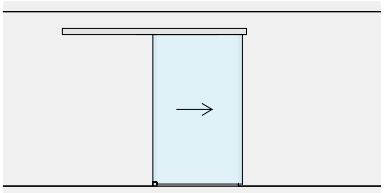

Page 106

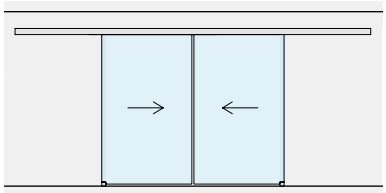

Page 110

MOVING DOORS
WITH FIXED GLASS

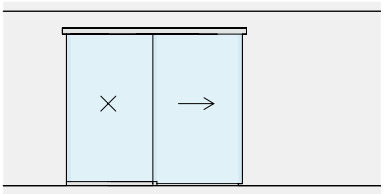

Page 114

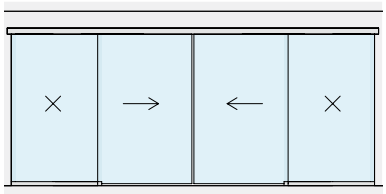

Page 118

SLIDING DOOR KIT, CEILING FIXING SINGLE DOOR

Material: Aluminium
Finish: /6 /88 /97

WITHOUT HOLES IN THE GLASS

DOOR OPENING SIZE

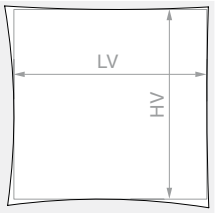

HV max: **3000** mm

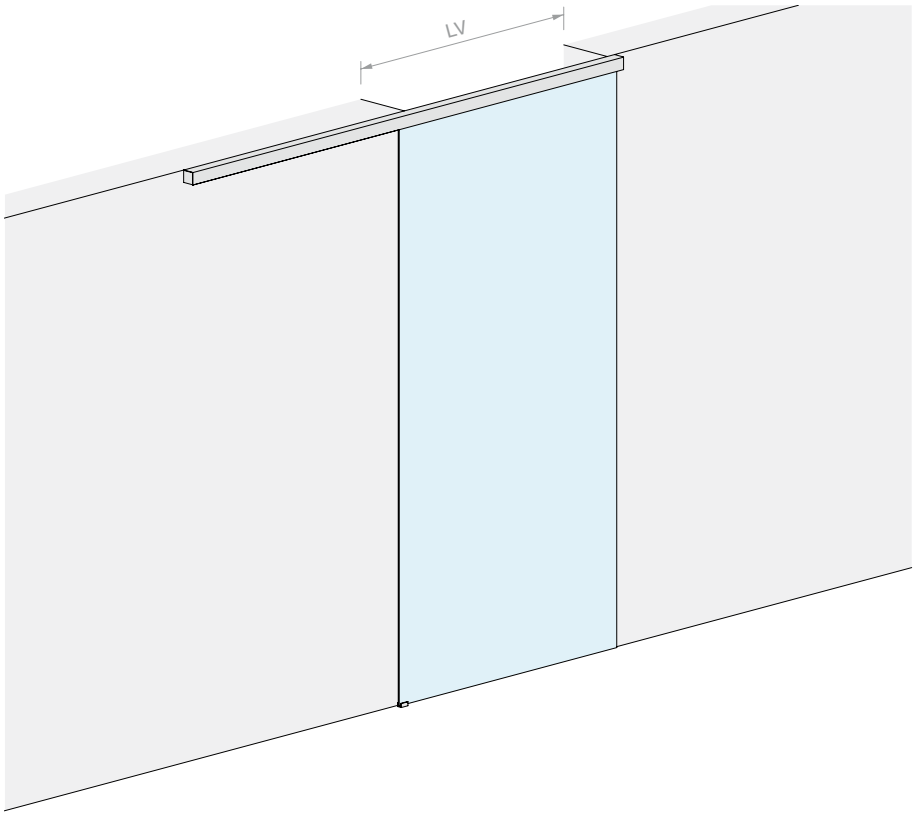

DOOR PANEL PANE

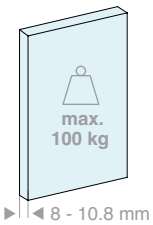

DOOR PANEL PANE

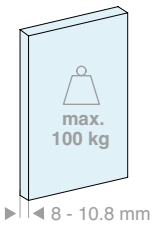

Kit comprising:

Art.	Description	Qty
LM5864S.200	Ceiling fixing track	1 Pc
LM0064CP.200	Track cover	1 Pc
LMC13.200	Finishing profile	1 Pc
LM63061TP33	Finishing cap	2 Pcs
CERPOS162	Clamp	2 Pcs
LMPS-STP55	End stop without buffer	2 Pcs
LMGF	Floor guide	1 Pc
Optional		
LMDMP070ZKIT	Dual action damper kit for 40-70 kg	1 Pc
LMDMP100ZKIT	Dual action damper kit for 70-100 kg	1 Pc

Kit comprising:

Art.	Description	Qty
LM5864S.300	Ceiling fixing track	1 Pc
LM0064CP.300	Track cover	1 Pc
LMC13.300	Finishing profile	1 Pc
LM63061TP33	Finishing cap	2 Pcs
CERPOS162	Clamp	2 Pcs
LMPS-STP55	End stop without buffer	2 Pcs
LMGF	Floor guide	1 Pc
Optional		
LMDMP070ZKIT	Dual action damper kit for 40-70 kg	1 Pc
LMDMP100ZKIT	Dual action damper kit for 70-100 kg	1 Pc

Art.	LV max	Qty
LMP6511P.200	**920** mm	1 Pc

Art.	LV max	Qty
LMP6511P.300	**1420** mm	1 Pc

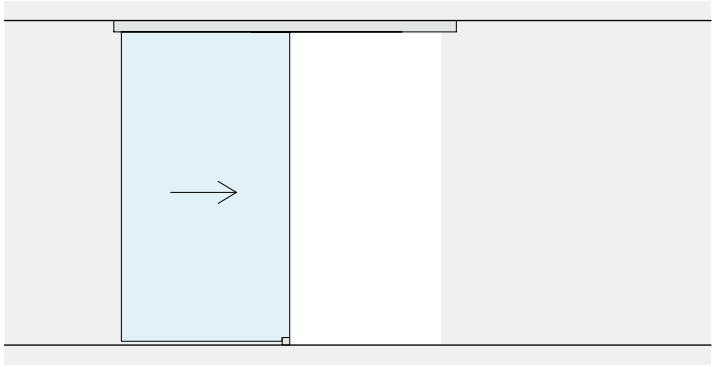

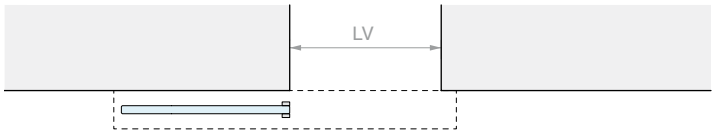
LV

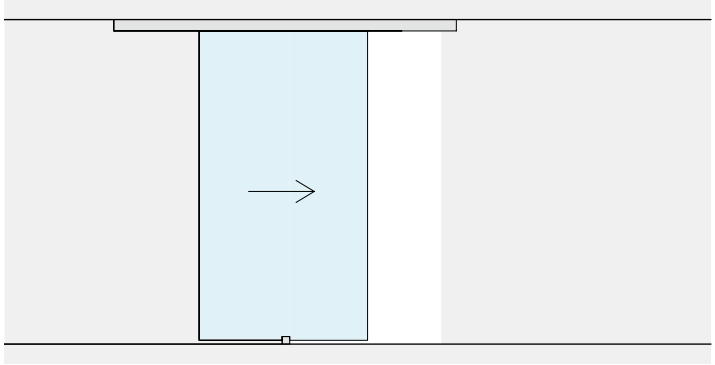

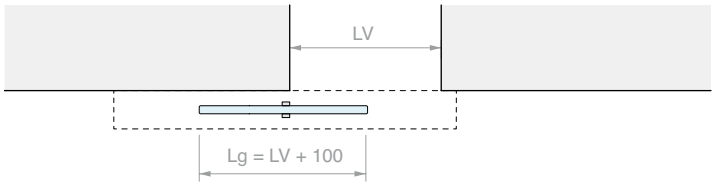
LV
Lg = LV + 100

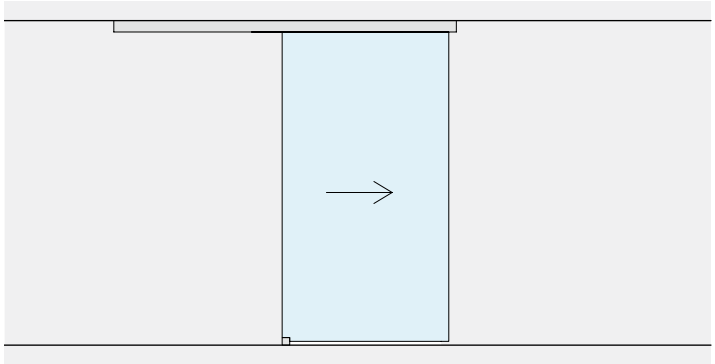

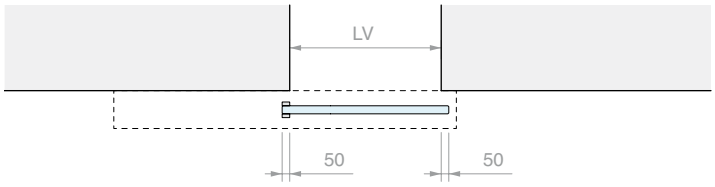
LV
50
50

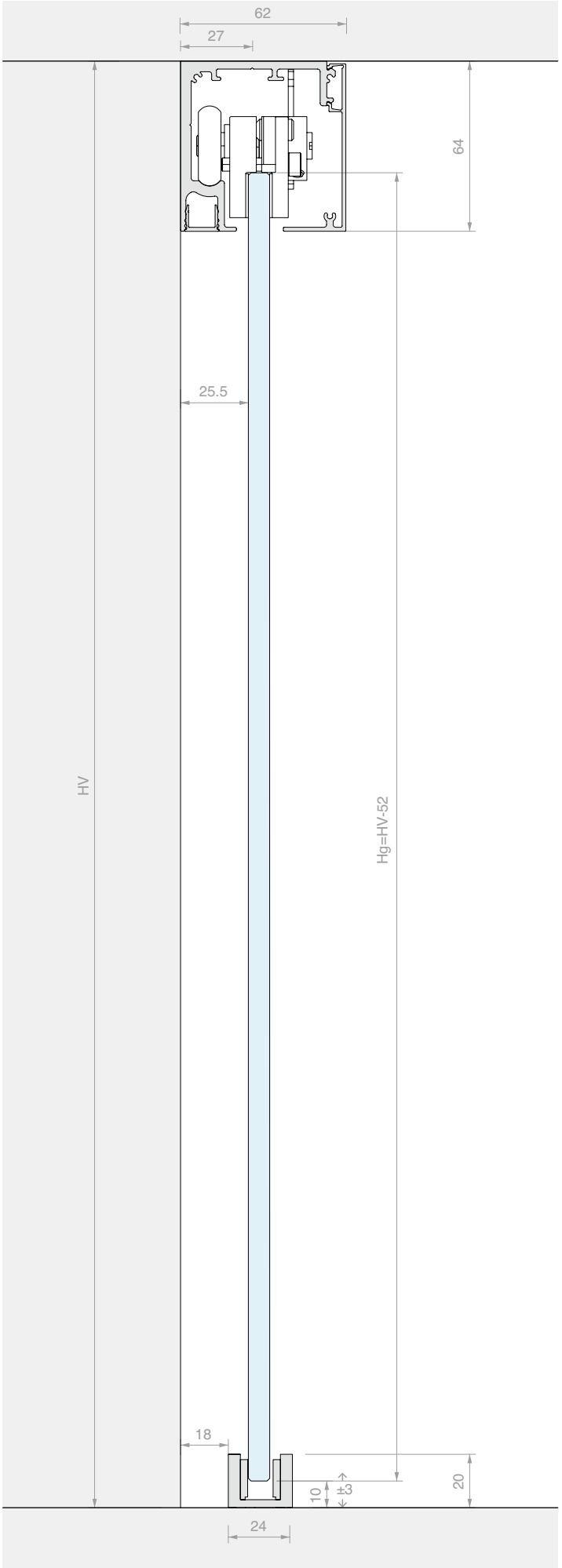
62
27
64
25.5
HV
Hg=HV-52
18
10
±3
20
24

SLIDING DOOR KIT, CEILING FIXING DOUBLE SYNCHRONISED DOORS

Material: Aluminium

Finish: /6 /88 /97

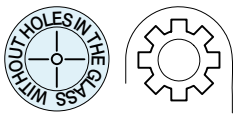

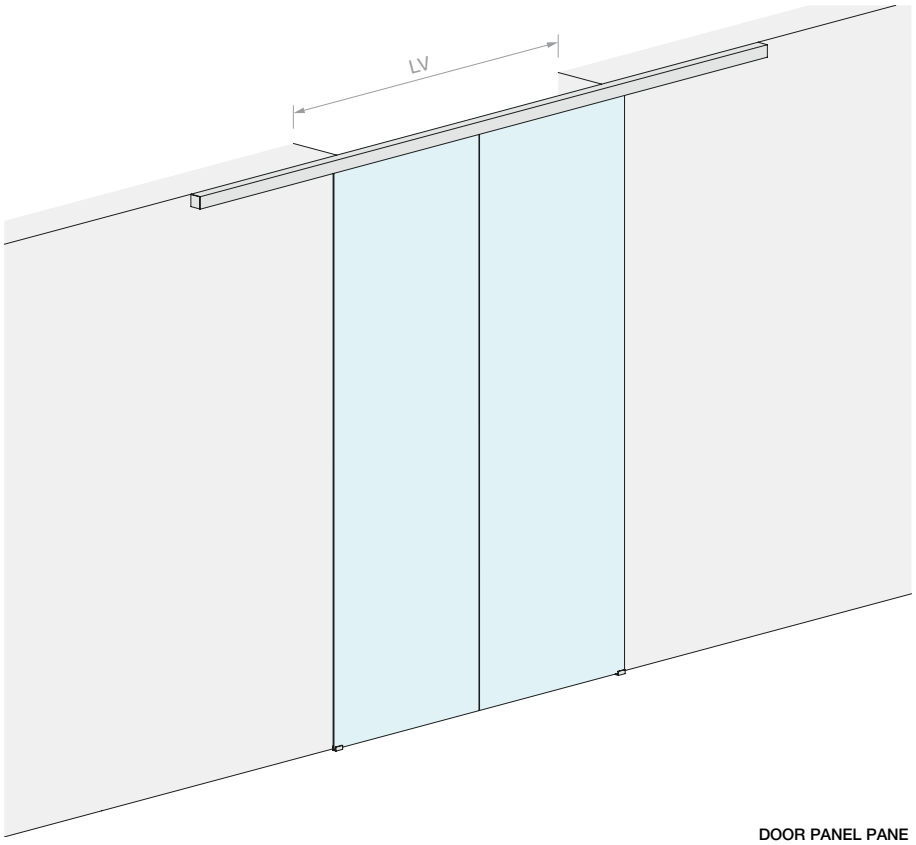

DOOR OPENING SIZE

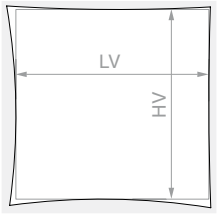

HV max: **3000** mm

DOOR PANEL PANE

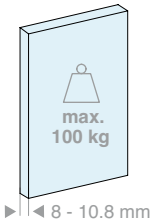

Kit comprising:

Art.	Description	Qty
LM5864S.400	Ceiling fixing track	1 Pc
LM0064CP.400	Track cover	1 Pc
LMC13.200	Finishing profile	2 Pcs
LM63061TP33	Finishing cap	2 Pcs
CERPOS162	Clamp	4 Pcs
LMPS-STP55	End stop without buffer	4 Pcs
LMGF	Floor guide	2 Pcs
LMSIN-AC55	Synchronisation kit	1 Pc

Optional

LMDMP100ZKIT	Dual action damper kit for 35-50 kg	1 Pc

Art.	LV max	Qty
LMP6511CP.400	**1940** mm	1 Pc

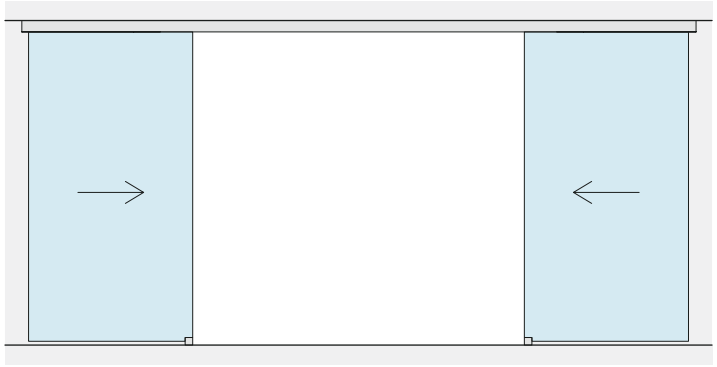

LV

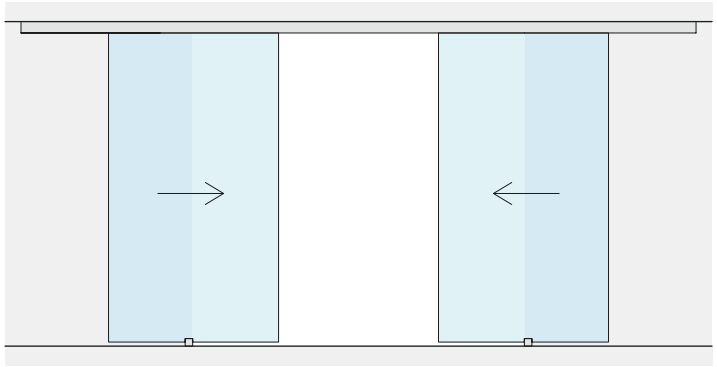

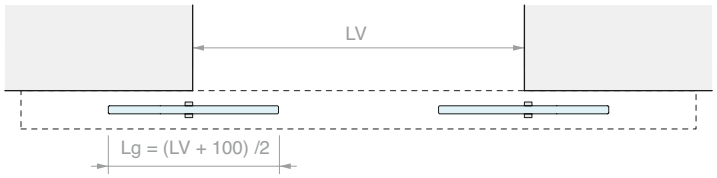
LV
Lg = (LV + 100) /2

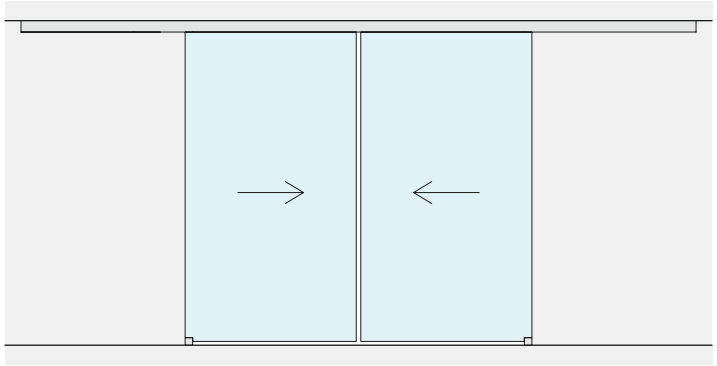

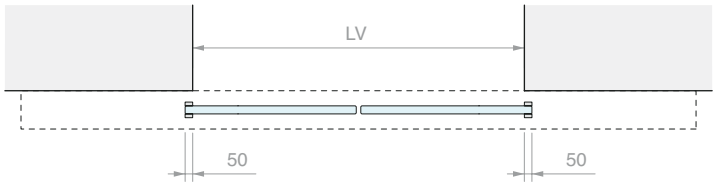
LV
50
50

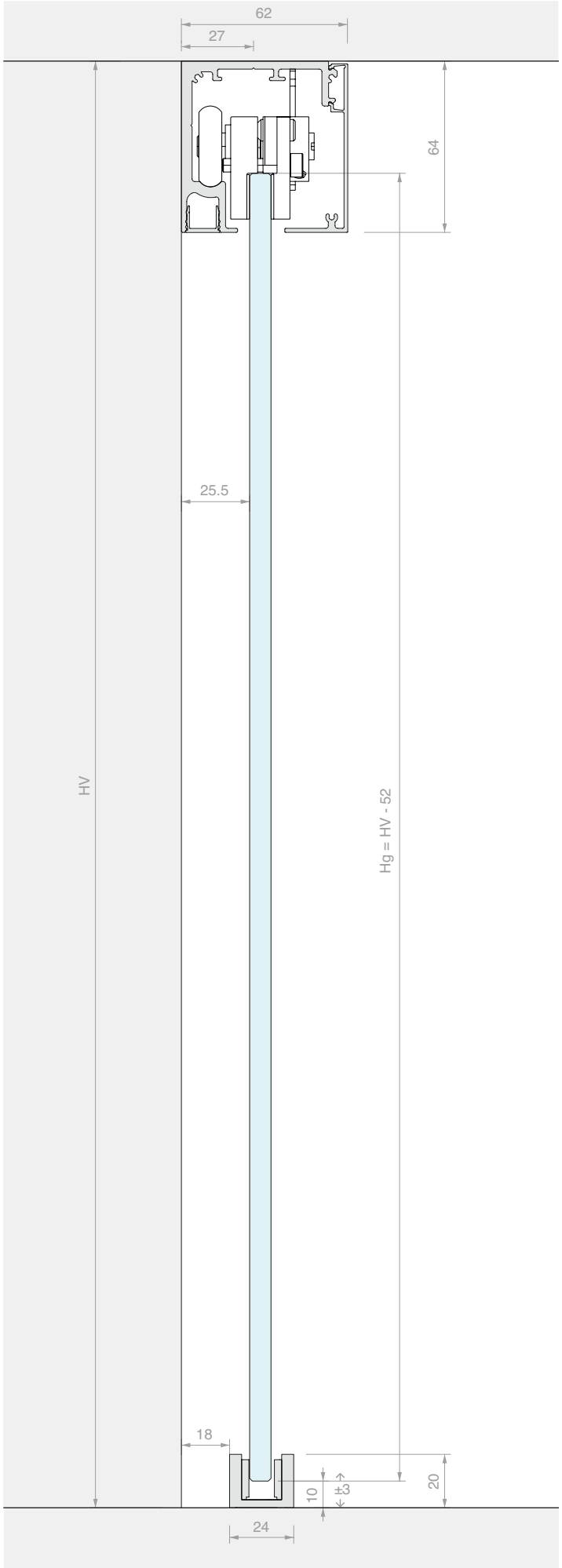
62
27
64
25.5
HV
Hg = HV - 52
18
10
±3
20
24

SLIDING DOOR KIT, CEILING FIXING
SINGLE DOOR AND FIXED GLASS

Material: Aluminium
Finish: /6 /88 /97

WITHOUT HOLES IN THE GLASS

DOOR OPENING SIZE

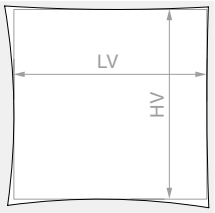

HV max: **3000** mm

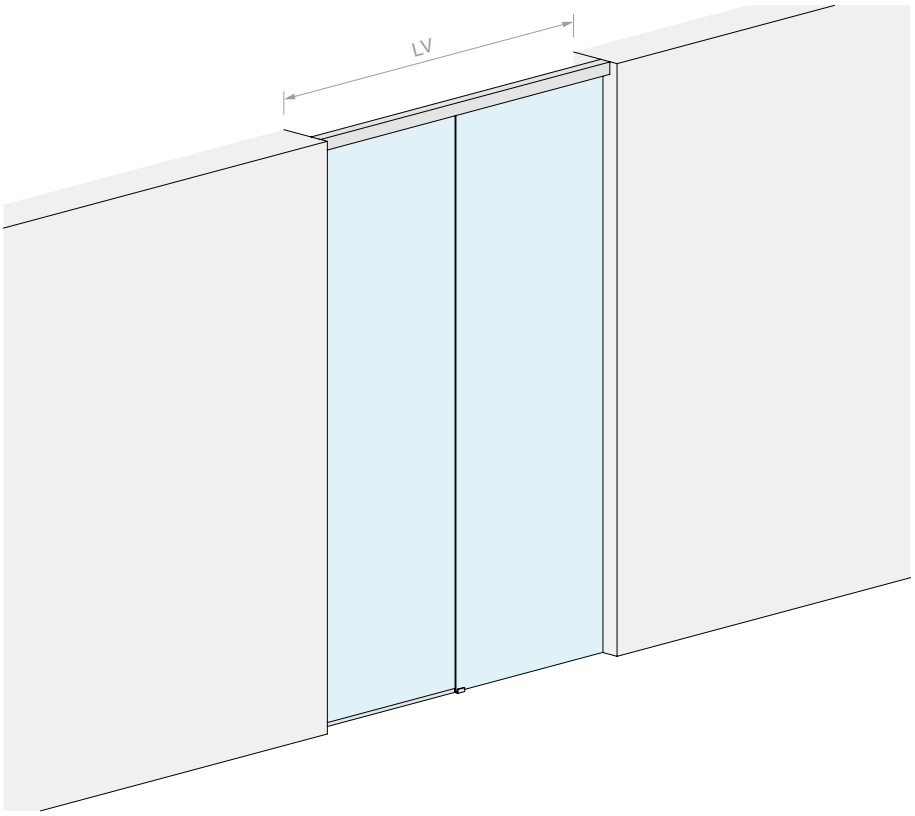

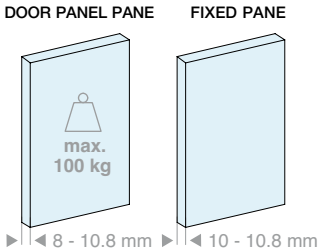

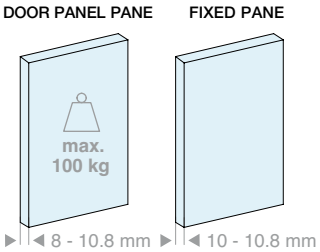

Kit comprising:

Art.	Description	Qty
LM5864S.200	Ceiling fixing track	1 Pc
LM0064CP.200	Track cover	1 Pc
LMC13.100	Finishing profile	1 Pc
LMU20.300	U profile	1 Pc
LMU20.150	U profile	1 Pc
LMU20TP	Finishing cap	1 Pc
CERPOS162	Clamp	2 Pcs
LMPS-STP55	End stop without buffer	2 Pcs
GTUP2	Glass holder gasket	5 m
LMGF	Floor guide	1 Pc

Optional

LMDMP070ZKIT	Dual action damper kit for 40-70 kg	1 Pc
LMDMP100ZKIT	Dual action damper kit for 70-100 kg	1 Pc

Kit comprising:

Art.	Description	Qty
LM5864S.300	Ceiling fixing track	1 Pc
LM0064CP.300	Track cover	1 Pc
LMC13.200	Finishing profile	1 Pc
LMU20.300	U profile	2 Pcs
LMU20TP	Finishing cap	1 Pc
CERPOS162	Clamp	2 Pcs
LMPS-STP55	End stop without buffer	2 Pcs
GTUP2	Glass holder gasket	5 m
LMGF	Floor guide	1 Pc

Optional

LMDMP070ZKIT	Dual action damper kit for 40-70 kg	1 Pc
LMDMP100ZKIT	Dual action damper kit for 70-100 kg	1 Pc

Art.	LV max	Qty
LMP6511FP.200	**2000** mm	1 Pc

Art.	LV max	Qty
LMP6511FP.300	**3000** mm	1 Pc

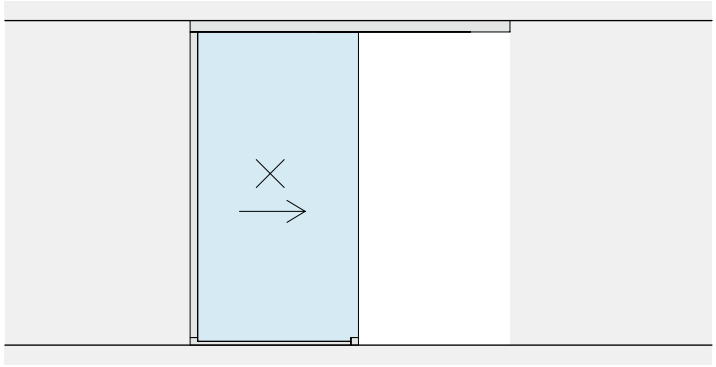

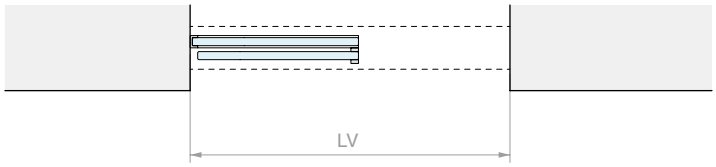
LV

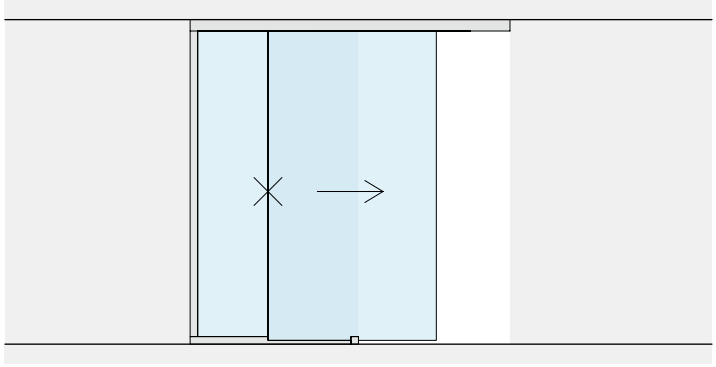

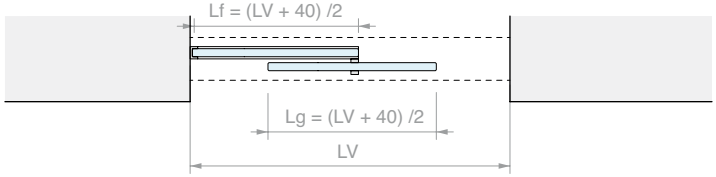
Lf = (LV + 40) /2
Lg = (LV + 40) /2
LV

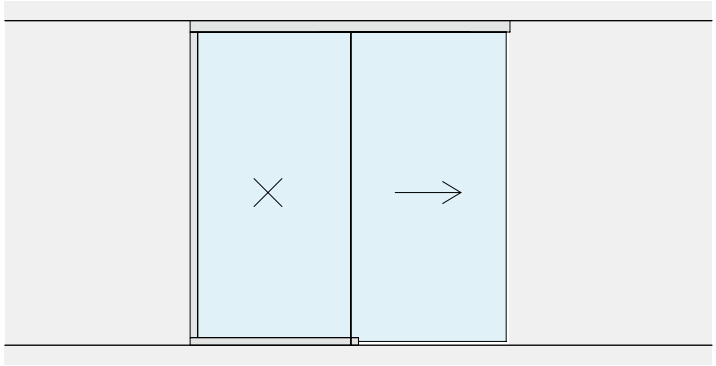

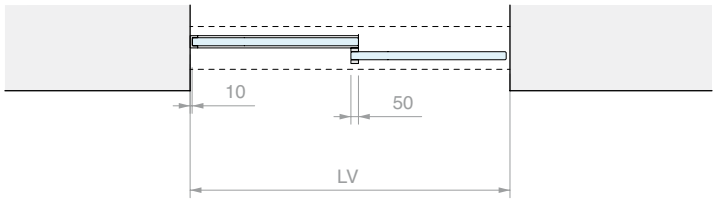
10
50
LV

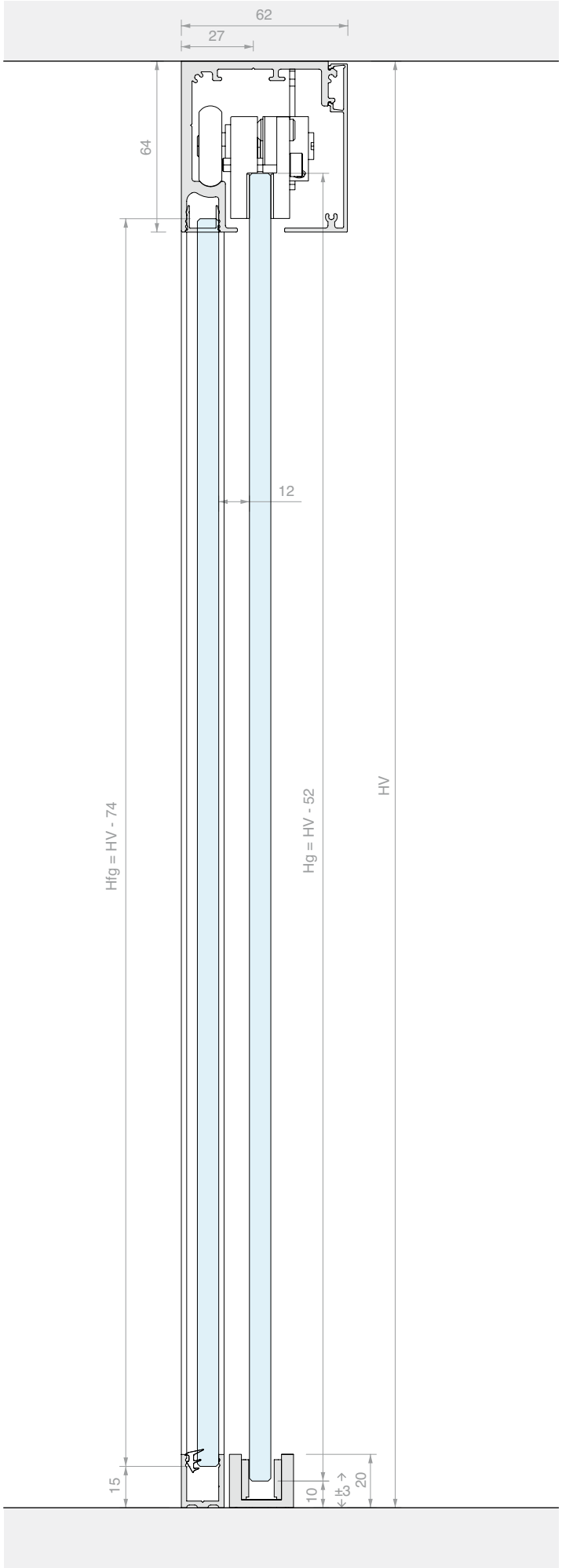
62
27
64
12
Hfg = HV - 74
Hg = HV - 52
HV
15
10
3
20

SLIDING DOOR KIT, CEILING FIXING
SYNCHRONISED DOUBLE DOOR AND DOUBLE FIXED GLASS

Material: Aluminium
Finish: /6 /88 /97

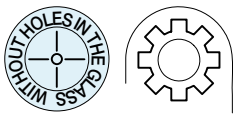

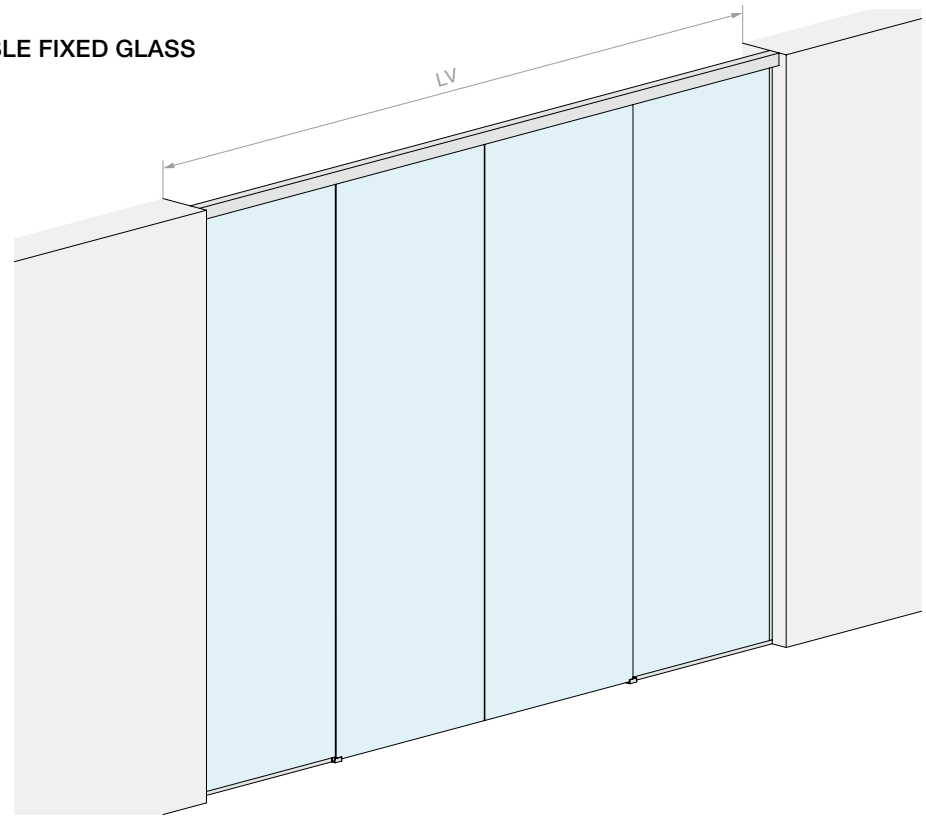

DOOR OPENING SIZE

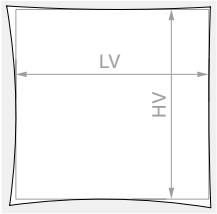

HV max: **3000** mm

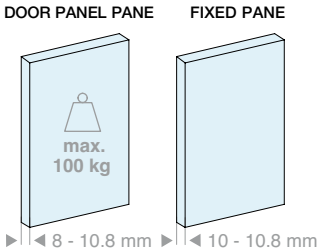

Kit comprising:

Art.	Description	Qty
LM5864S.400	Ceiling fixing track	1 Pc
LM0064CP.400	Track cover	1 Pc
LMC13.200	Finishing profile	1 Pc
LMU20.300	U profile	2 Pcs
LMU20.150	U profile	2 Pcs
LMU20TP	Finishing cap	2 Pcs
CERPOS162	Clamp	4 Pcs
LMPS-STP55	End stop without buffer	4 Pcs
GTUP2	Glass holder gasket	10 m
LMGF	Floor guide	2 Pcs
LMSIN-AC55	Synchronisation kit	1 Pc

Optional

LMDMP100ZKIT	Dual action damper kit for 35-50 kg	1 Pc

Art.	LV max	Qty
LMP6511CFP.400	**4000** mm	1 Pc

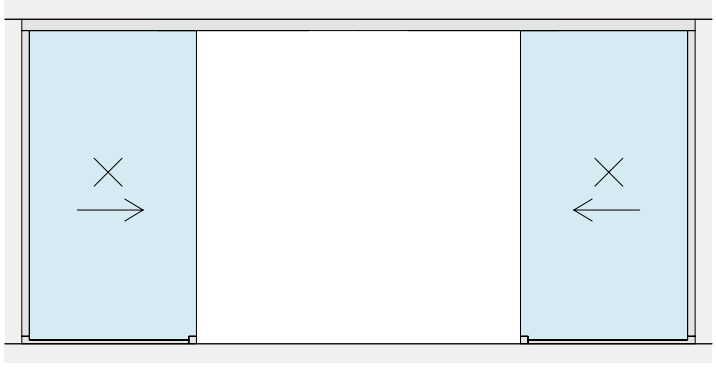

LV

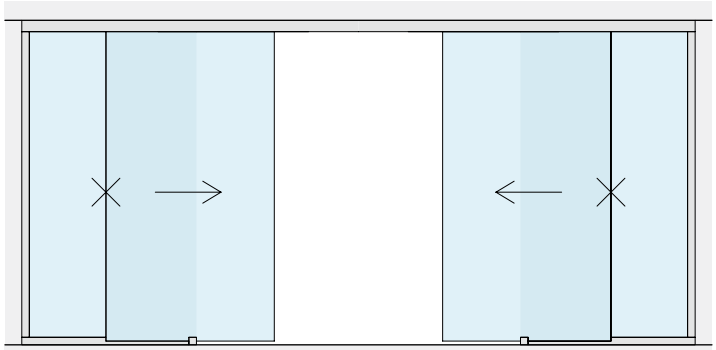

Lf = (LV + 80) /4
Lg = (LV + 80) /4
LV

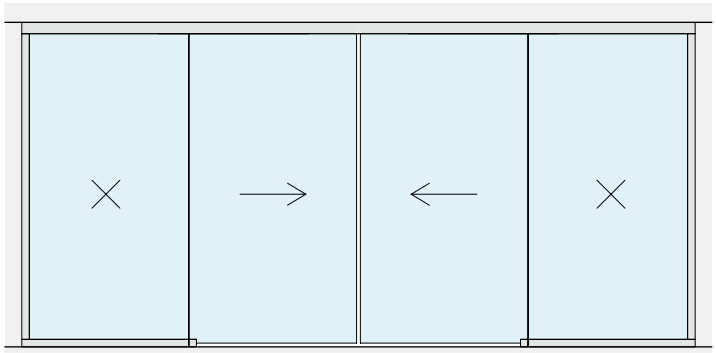

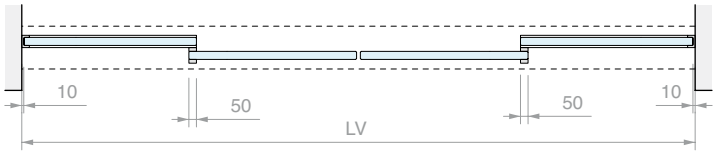
10
50
50
10
LV

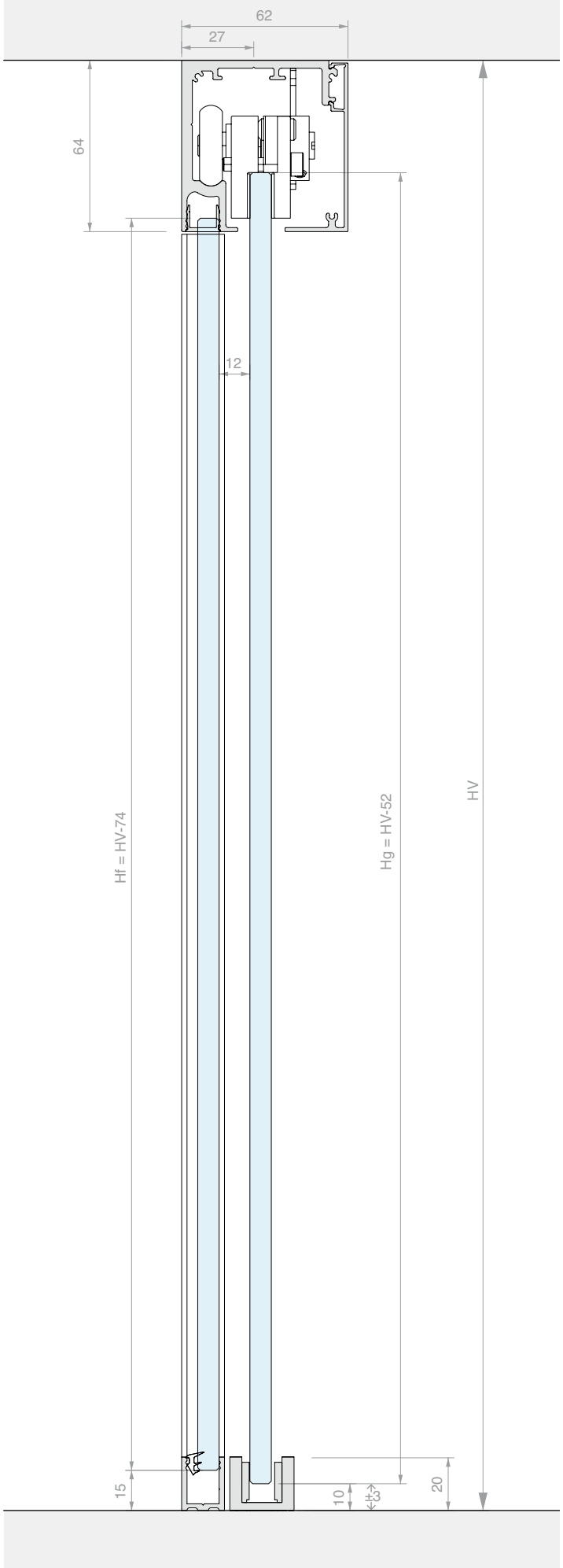
62
27
64
12
Hf = HV-74
Hg = HV-52
HV
15
10
±3
20

WALL FIXING SLIDING DOOR KIT
SINGLE DOOR

Material: Aluminium
Finish: /6 /88 /97

WITHOUT HOLES IN THE GLASS

DOOR OPENING SIZE

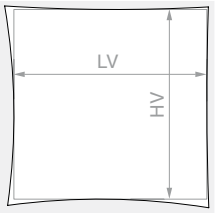

HV max: **3000** mm

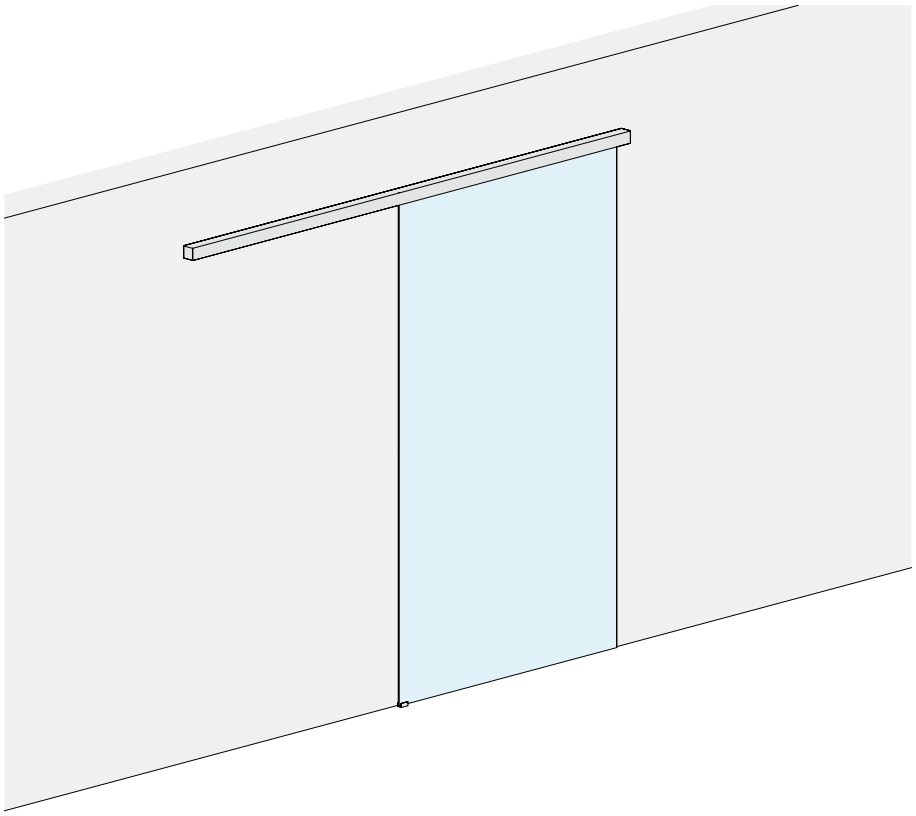

DOOR PANEL PANE

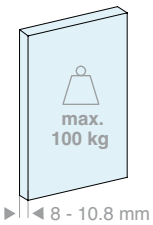

DOOR PANEL PANE

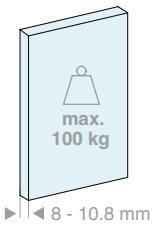

Kit comprising:

Art.	Description	Qty
LM5864P.200	Wall fixing track	1 Pc
LM0064CP.200	Track cover	1 Pc
LMC13.200	Finishing profile	1 Pc
LM63061TP33	Finishing cap	2 Pcs
CERPOS162	Clamp	2 Pcs
LMPS-STP55	End stop without buffer	2 Pcs
LMGF	Floor guide	1 Pc
Optional		
LMDMP070ZKIT	Dual action damper kit for 40-70 kg	1 Pc
LMDMP100ZKIT	Dual action damper kit for 70-100 kg	1 Pc

Kit comprising:

Art.	Description	Qty
LM5864P.300	Wall fixing track	1 Pc
LM0064CP.300	Track cover	1 Pc
LMC13.300	Finishing profile	1 Pc
LM63061TP33	Finishing cap	2 Pcs
CERPOS162	Clamp	2 Pcs
LMPS-STP55	End stop without buffer	2 Pcs
LMGF	Floor guide	1 Pc
Optional		
LMDMP070ZKIT	Dual action damper kit for 40-70 kg	1 Pc
LMDMP100ZKIT	Dual action damper kit for 70-100 kg	1 Pc

Art.	LV max	Qty
LMP6521P.200	**920** mm	1 Pc

Art.	LV max	Qty
LMP6521P.300	**1420** mm	1 Pc

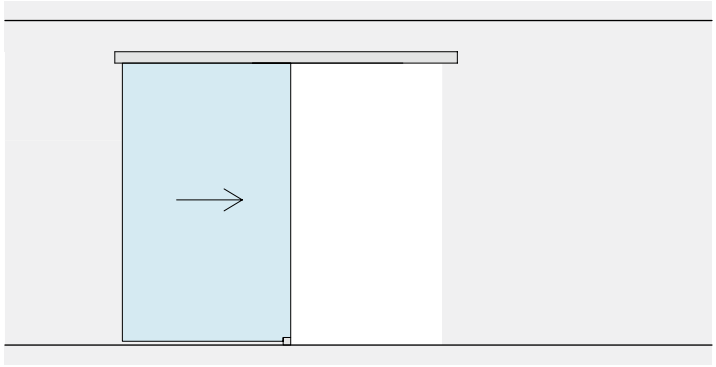

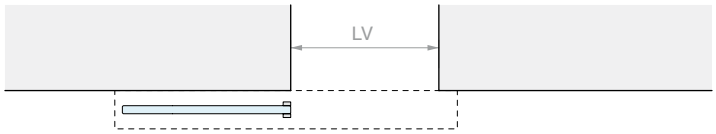
LV

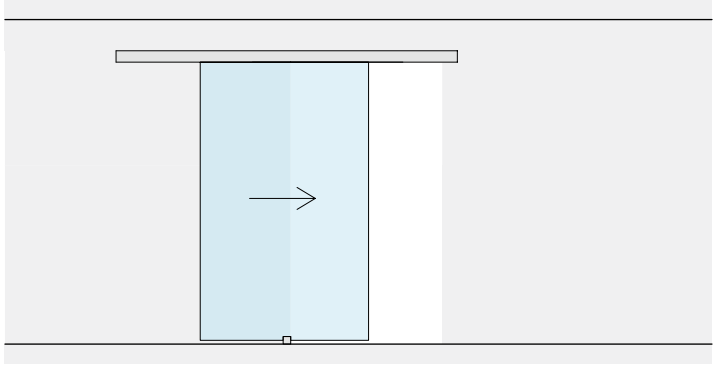

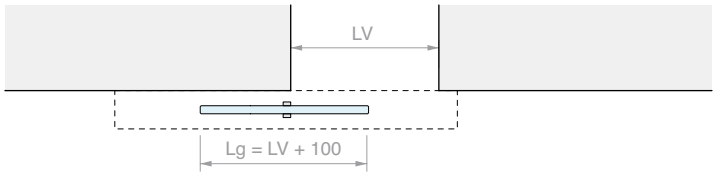
LV
Lg = LV + 100

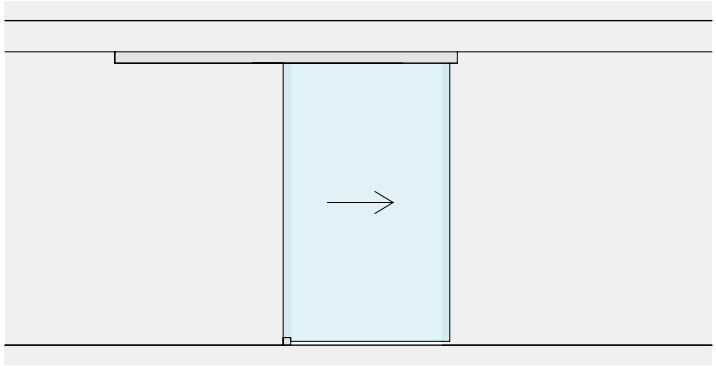

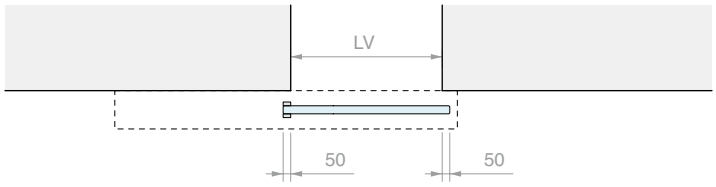
LV
50
50

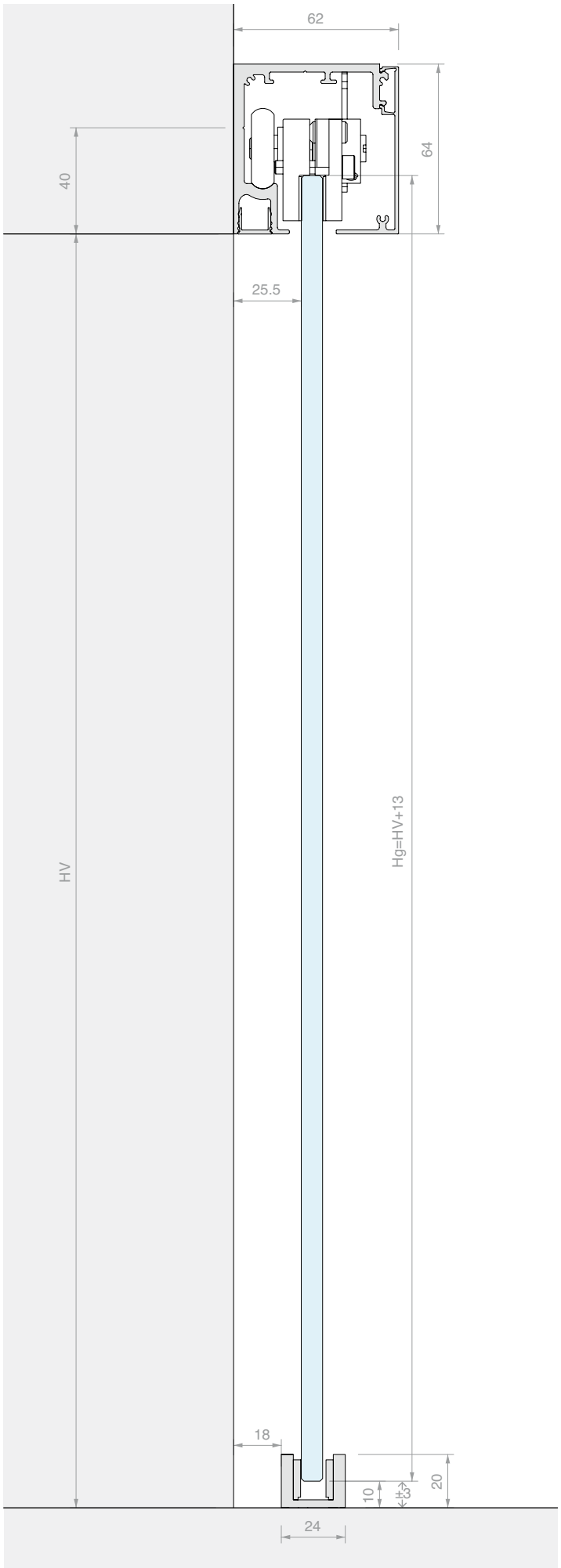
62
64
40
25.5
HV
Hg=HV+13
18
10
3
20
24

WHITE

WALL FIXING SLIDING DOOR KIT
DOUBLE DOOR PANEL, SYNCHRONISED

Material: Aluminium
Finish: /6 /88 /97

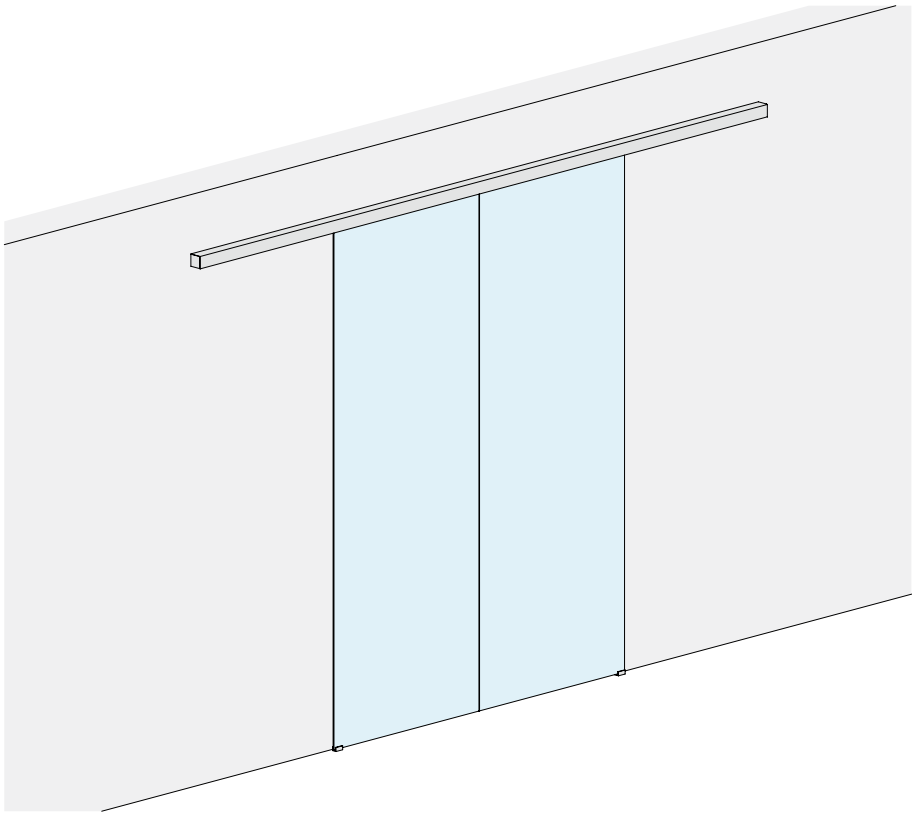

DOOR OPENING SIZE

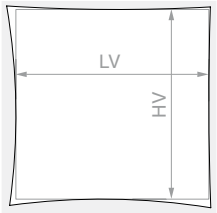

HV max: **3000** mm

DOOR PANEL PANE

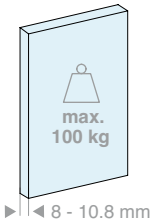

Kit comprising:

Art.	Description	Qty
LM5864P.400	Wall fixing track	1 Pc
LM0064CP.400	Track cover	1 Pc
LMC13.200	Finishing profile	2 Pcs
LM63061TP33	Finishing cap	2 Pcs
CERPOS162	Clamp	4 Pcs
LMPS-STP55	End stop without buffer	4 Pcs
LMGF	Floor guide	2 Pcs
LMSIN-AC55	Synchronisation kit	1 Pc

Optional

LMDMP100ZKIT	Dual action damper kit for 35-50 kg	1 Pc

Art.	LV max	Qty
LMP6521CP.400	**1940** mm	1 Pc

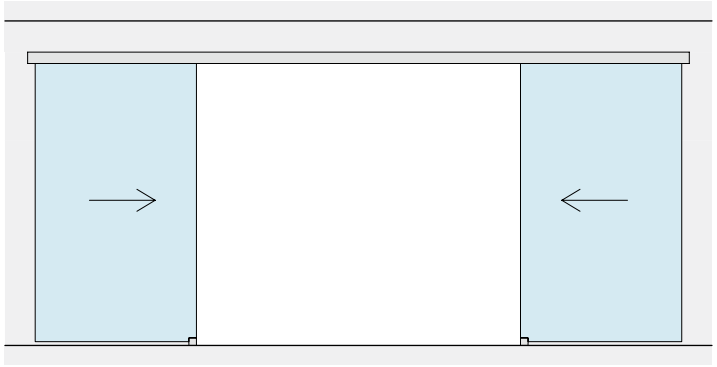

LV

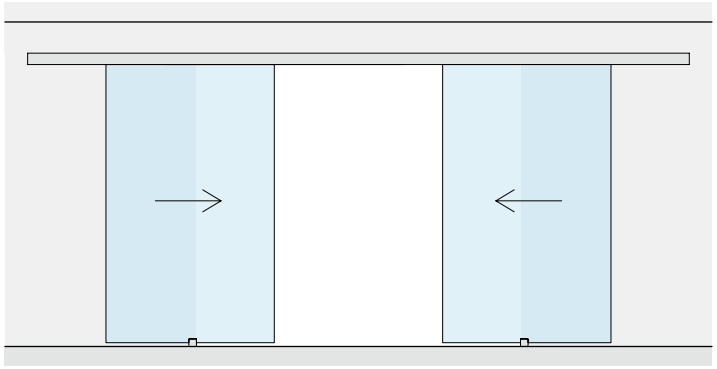

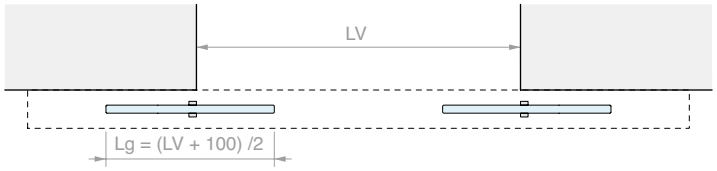
LV
Lg = (LV + 100) /2

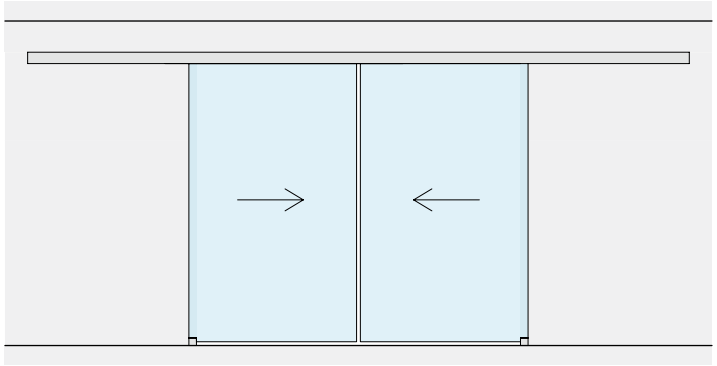

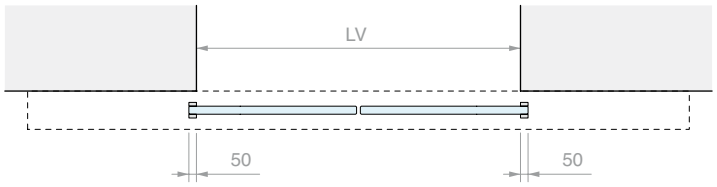
LV
50
50

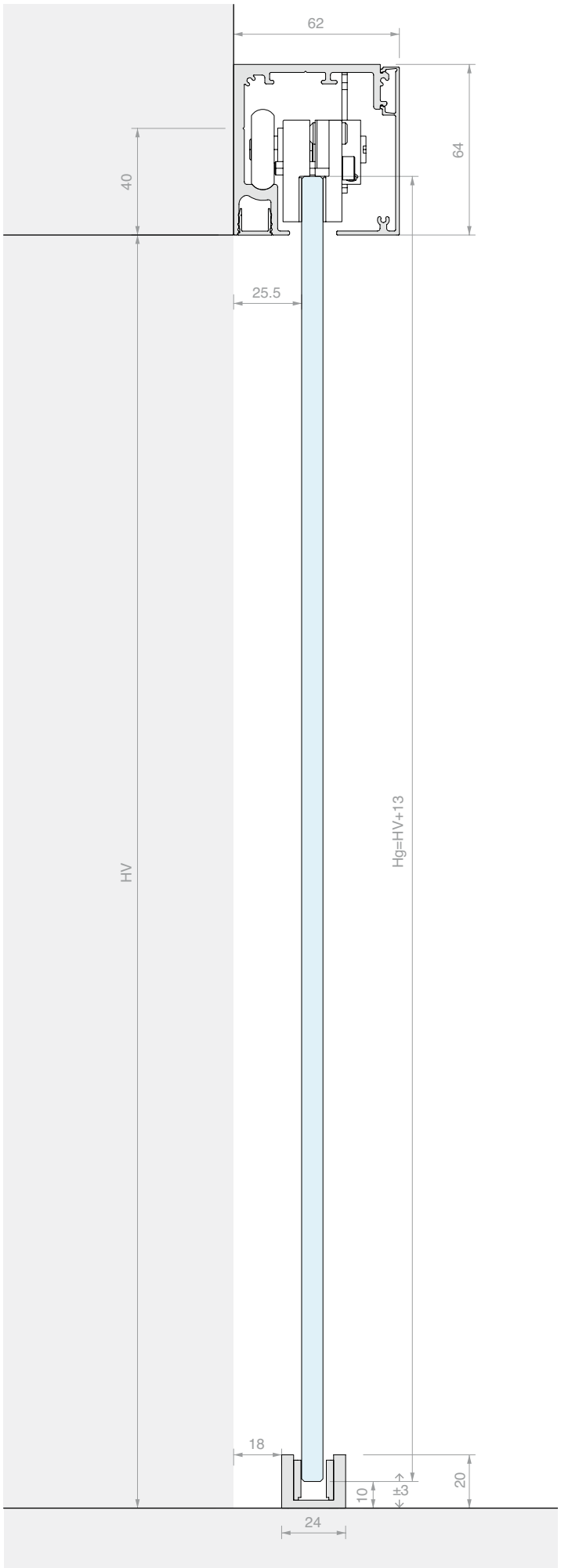
62
64
40
25.5
HV
Hg=HV+13
18
10
±3
20
24

WHITE

WALL FIXING SLIDING DOOR KIT
SINGLE DOOR AND FIXED GLASS

Material: Aluminium
Finish: /6 /88 /97

WITHOUT HOLES IN THE GLASS

DOOR OPENING SIZE

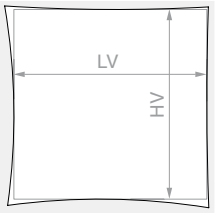

HV max: **3000** mm

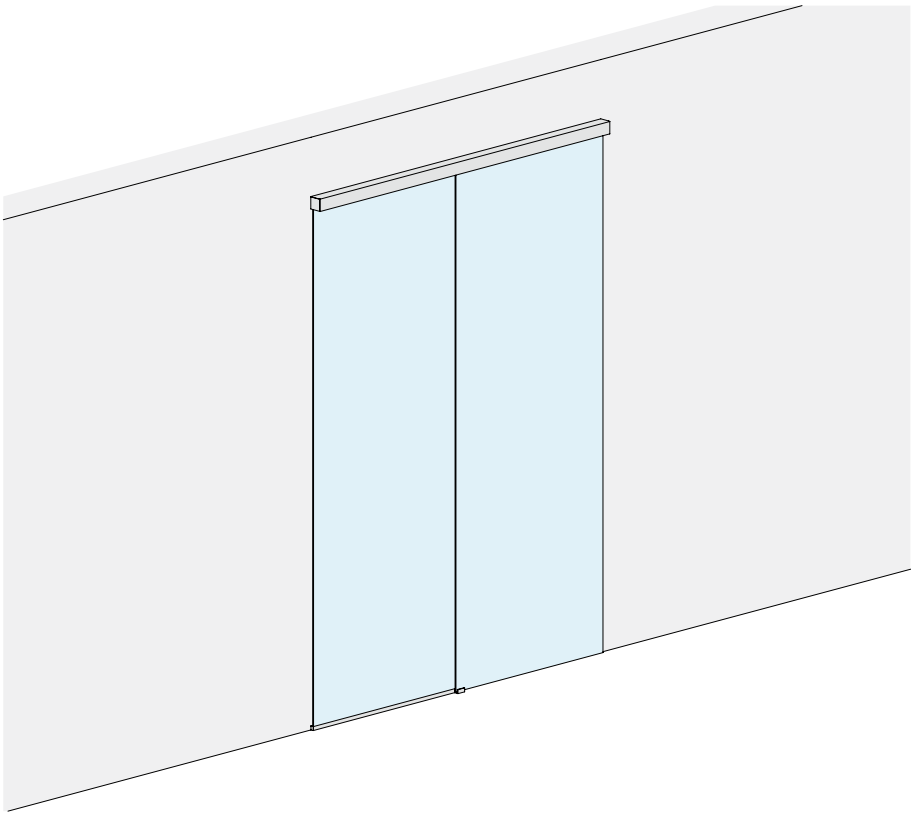

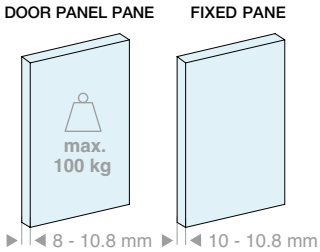

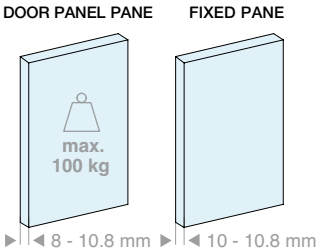

Kit comprising:

Art.	Description	Qty
LM5864P.200	Wall fixing track	1 Pc
LM0064CP.200	Track cover	1 Pc
LMC13.100	Finishing profile	1 Pc
LMU20.150	U profile	1 Pc
LM63061TP33	Finishing cap	2 Pcs
LMU20TP	Finishing cap	2 Pcs
CERPOS162	Clamp	2 Pcs
LMPS-STP55	End stop without buffer	2 Pcs
GTUP2	Glass holder gasket	5 m
LMGF	Floor guide	1 Pc

Optional

LMDMP070ZKIT	Dual action damper kit for 40-70 kg	1 Pc
LMDMP100ZKIT	Dual action damper kit for 70-100 kg	1 Pc

Kit comprising:

Art.	Description	Qty
LM5864P.300	Wall fixing track	1 Pc
LM0064CP.300	Track cover	1 Pc
LMC13.200	Finishing profile	1 Pc
LMU20.300	U profile	1 Pc
LM63061TP33	Finishing cap	2 Pcs
LMU20TP	Finishing cap	2 Pcs
CERPOS162	Clamp	2 Pcs
LMPS-STP55	End stop without buffer	2 Pcs
GTUP2	Glass holder gasket	5 m
LMGF	Floor guide	1 Pc

Optional

LMDMP070ZKIT	Dual action damper kit for 40-70 kg	1 Pc
LMDMP100ZKIT	Dual action damper kit for 70-100 kg	1 Pc

Art.	LV max	Qty
LMP6521FP.200	**1880** mm	1 Pc

Art.	LV max	Qty
LMP6521FP.300	**2880** mm	1 Pc

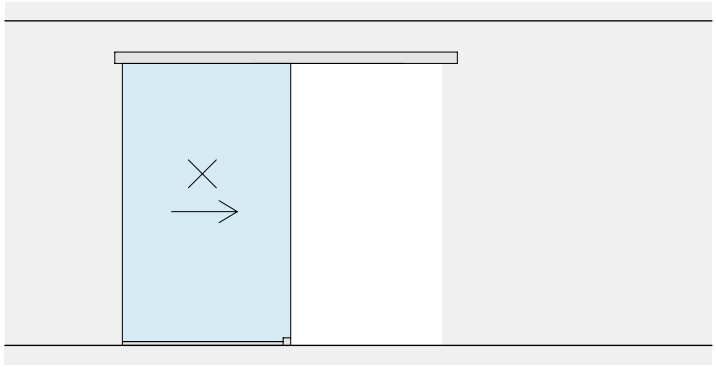

LV

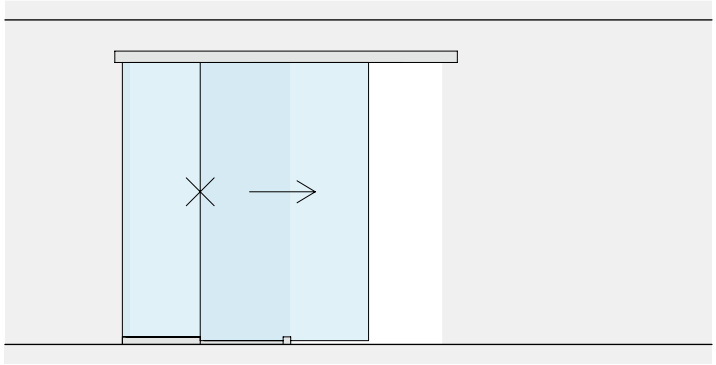

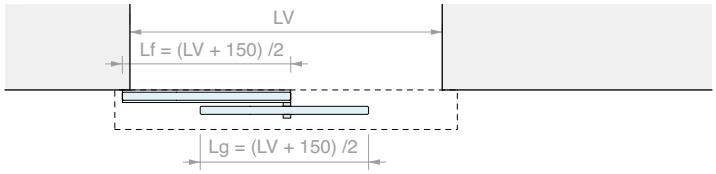
LV
Lf = (LV + 150) /2
Lg = (LV + 150) /2

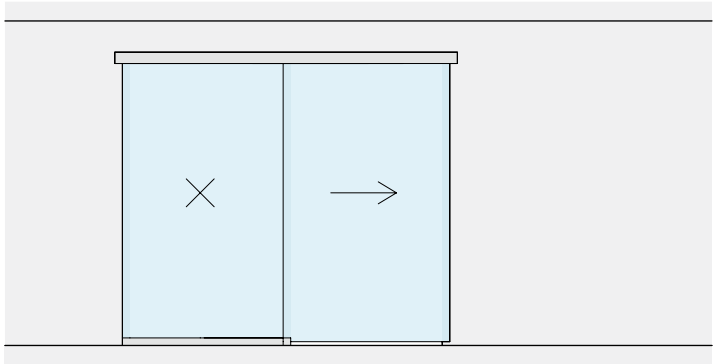

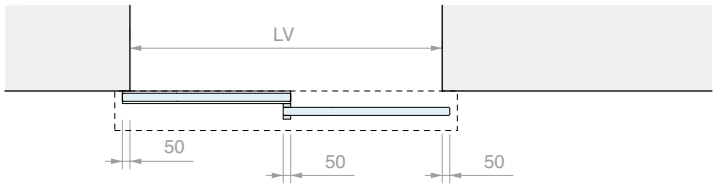
LV
50
50
50

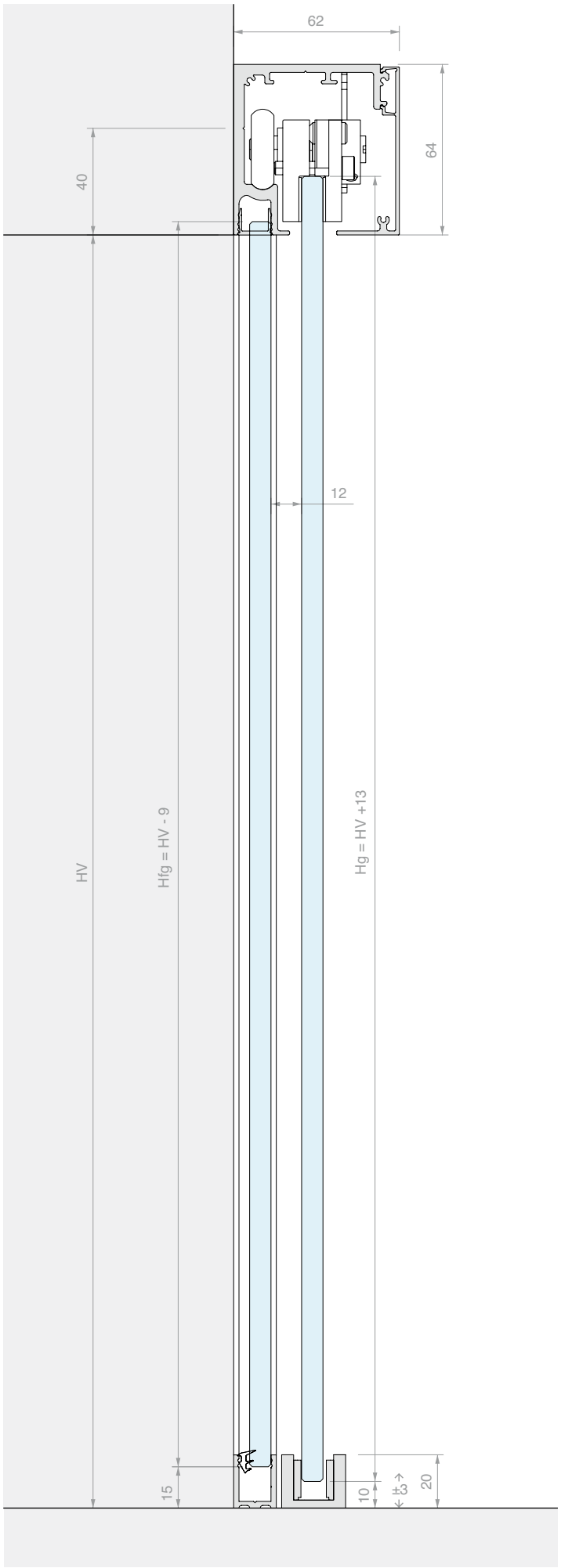
62
64
40
12
HV
Hfg = HV - 9
Hg = HV +13
15
10
±3
20

WALL FIXING SLIDING DOOR KIT
SYNCHRONISED DOUBLE DOOR AND DOUBLE FIXED GLASS

Material: Aluminium
Finish: /6 /88 /97

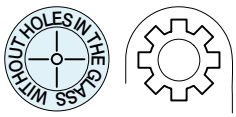

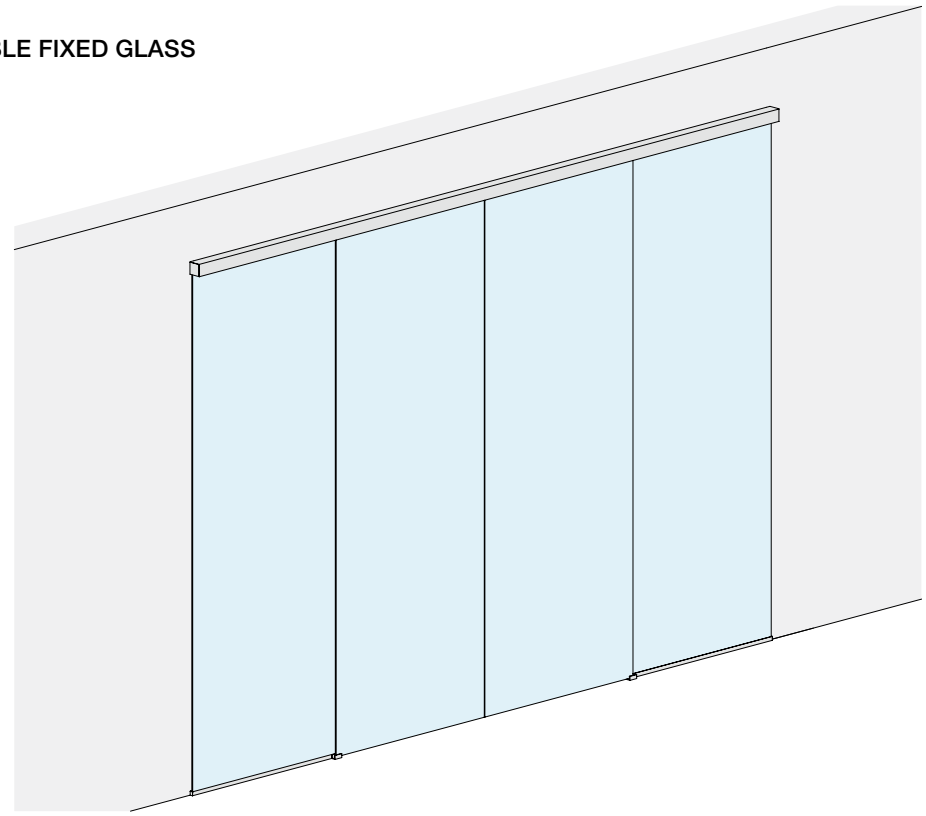

DOOR OPENING SIZE

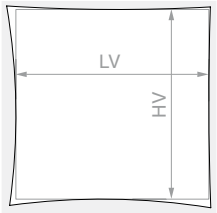

HV max: **3000** mm

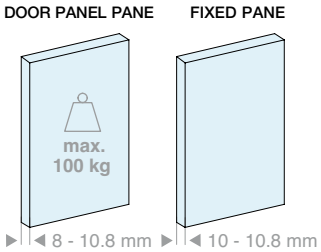

Kit comprising:

Art.	Description	Qty
LM5864P.400	Wall fixing track	1 Pc
LM0064CP.400	Track cover	1 Pc
LMC13.200	Finishing profile	1 Pc
LMU20.300	U profile	1 Pc
LM63061TP33	Finishing cap	2 Pcs
LMU20TP	Finishing cap	4 Pcs
CERPOS162	Clamp	4 Pcs
LMPS-STP55	End stop without buffer	4 Pcs
GTUP2	Glass holder gasket	10 m
LMGF	Floor guide	2 Pcs
LMSIN-AC55	Synchronisation kit	1 Pc

Optional

LMDMP100ZKIT	Dual action damper kit for 35-50 kg	1 Pc

Art.	LV max	Qty
LMP6521CFP.400	**3880** mm	1 Pc

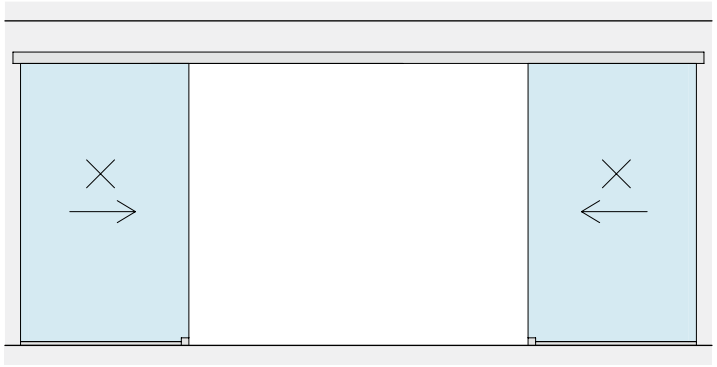

LV

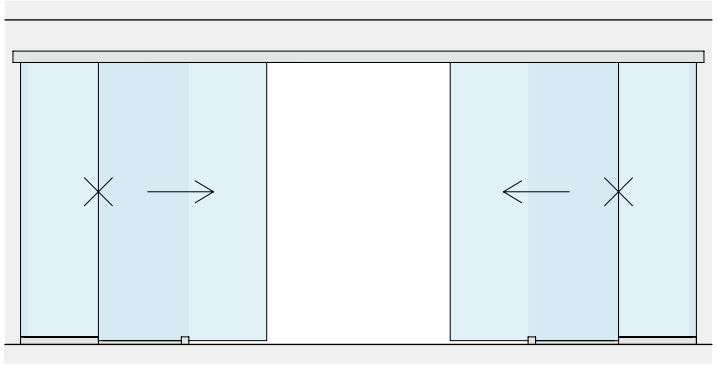

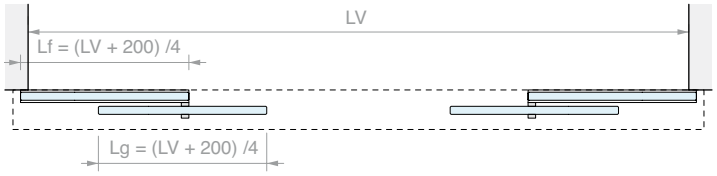
LV
Lf = (LV + 200) /4
Lg = (LV + 200) /4

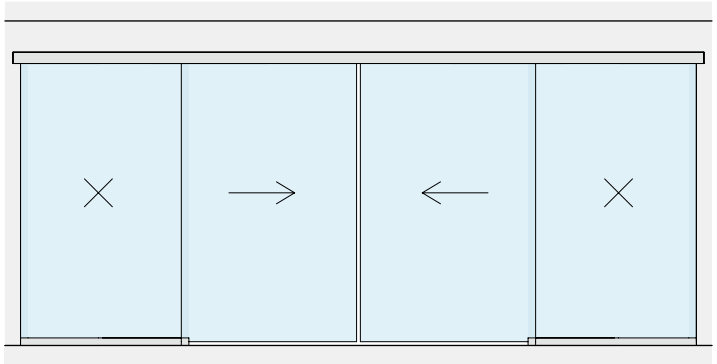

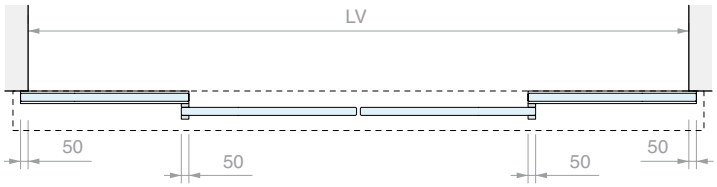
LV
50
50
50
50

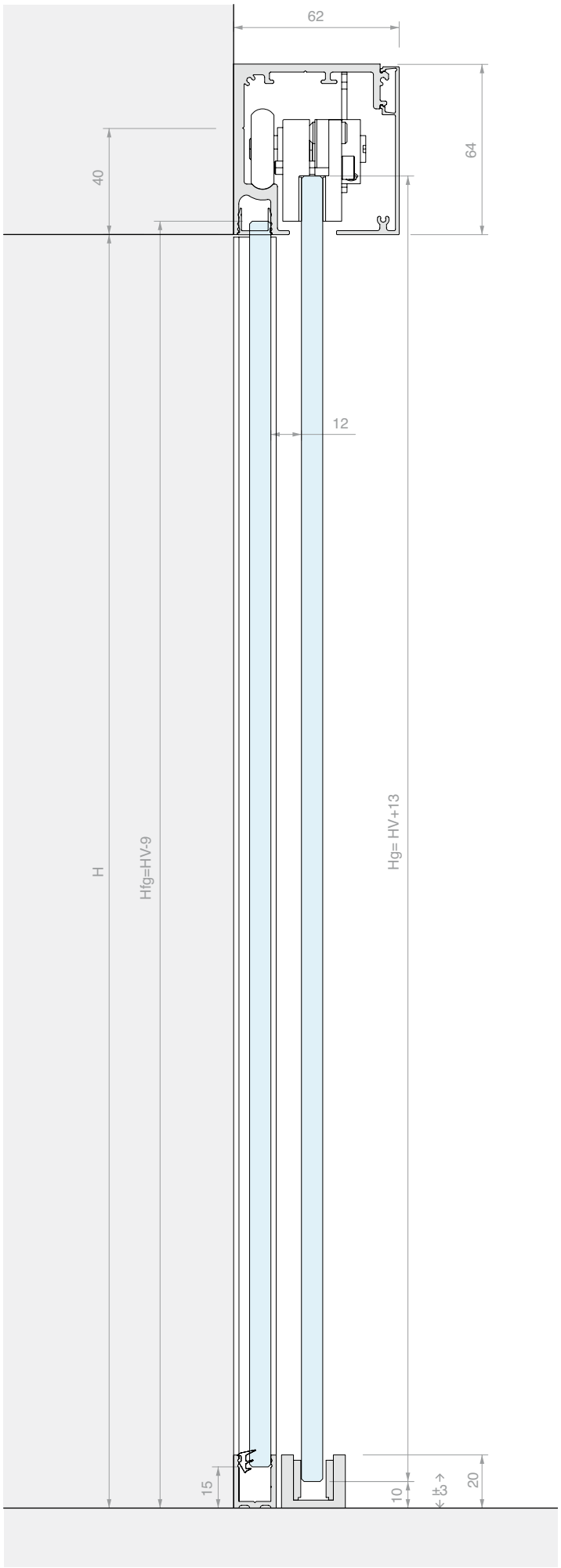
62
64
40
12
H
Hfg=HV-9
Hg= HV+13
15
10
±3
20

CEILING FIXING TRACK

Material: Aluminium

Finish: /6 /88 /97

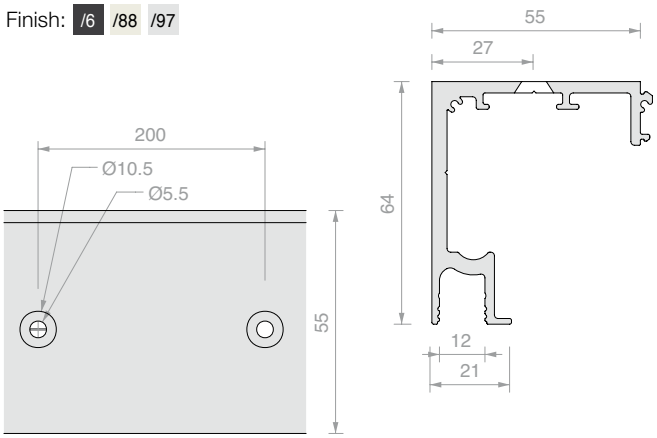

Art.	Length	Qty
LM5864S.200	**1998** mm	1 Pc
LM5864S.300	**2998** mm	1 Pc
LM5864S.400	**3998** mm	1 Pc
LM5864S.600	**6000** mm	1 Pc

WALL FIXING TRACK

Material: Aluminium

Finish: /6 /88 /97

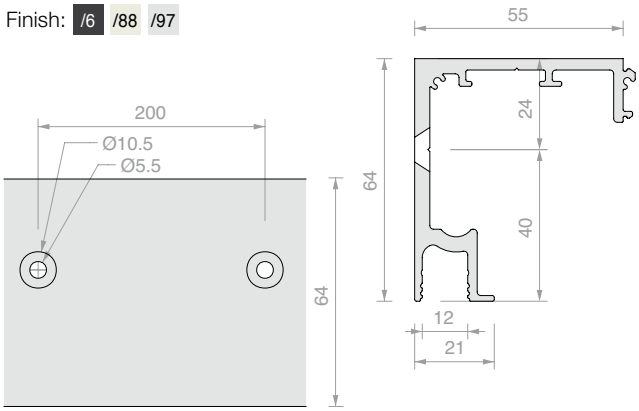

Art.	Length	Qty
LM5864P.200	**1998** mm	1 Pc
LM5864P.300	**2998** mm	1 Pc
LM5864P.400	**3998** mm	1 Pc
LM5864P.600	**6000** mm	1 Pc

TRACK COVER

Material: Aluminium

Finish: /6 /88 /97

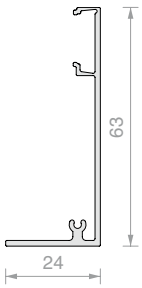

Art.	Length	Qty
LM0064CP.200	**1998** mm	1 Pc
LM0064CP.300	**2998** mm	1 Pc
LM0064CP.400	**3998** mm	1 Pc
LM0064CP.600	**6000** mm	1 Pc

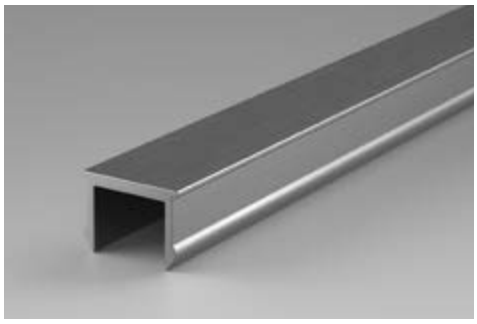

FINISHING PROFILE

Material: Aluminium

Finish: /6 /88 /97

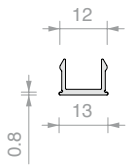

Art.	Length	Qty
LMC13.100	**996** mm	1 Pc
LMC13.150	**1498** mm	1 Pc
LMC13.200	**1998** mm	1 Pc
LMC13.300	**3000** mm	1 Pc

U PROFILE

Material: Aluminium

Finish: /6 /88 /91 /97

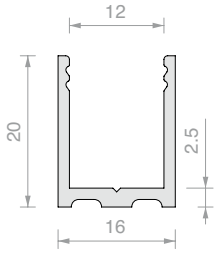

Art.	Length	Qty
LMU20.100	**996** mm	1 Pc
LMU20.150	**1498** mm	1 Pc
LMU20.300	**3000** mm	1 Pc

FINISHING CAP

Material: Aluminium

Finish: /88 /91 /97 /R2

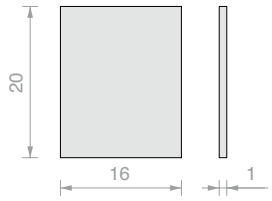

Art.	Qty
LMU20TP	1 Pc

GLASS HOLDER SEAL

Material: PVC

Art.	Thickness	Colour	Qty
GTUP2	**2** mm	Transparent	1 m
GTUP3	**3** mm	Transparent	1 m
GTUP4	**4** mm	Transparent	1 m
GTUP5	**5** mm	Transparent	1 m
GTUP6	**6** mm	Transparent	1 m

Art.	Thickness	Colour	Qty
GTUP2G	**2** mm	Embossed	1 m
GTUP3G	**3** mm	Embossed	1 m
GTUP4G	**4** mm	Embossed	1 m
GTUP5G	**5** mm	Embossed	1 m
GTUP6G	**6** mm	Embossed	1 m

Art.	Thickness	Colour	Qty
GTUP2N	**2** mm	Black	1 m
GTUP3N	**3** mm	Black	1 m
GTUP4N	**4** mm	Black	1 m
GTUP5N	**5** mm	Black	1 m
GTUP6N	**6** mm	Black	1 m

FINISHING CAP 3 SCREWS

Material: Aluminium

For RIGHT and LEFT installation.

Finish: /6 /88 /97

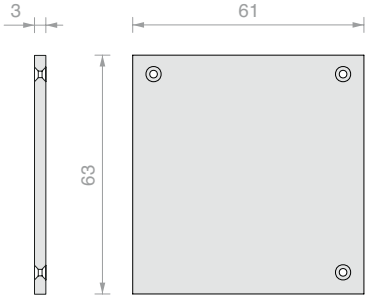

Art.	Qty
LM63061TP33	1 Pc

ADJUSTABLE CLAMP WITH WHEEL

Material: Aluminium and steel

Art.	For glass thickness	Qty
CERPOS162	From **8** to **10.8** mm	1 Pc

END STOP WITHOUT BUFFER

Material: Zamak

Art.	Qty
LMPS-STP55	1 Pc

FLOOR GUIDE

Material: Aluminium

Finish: /88 /97 /R2

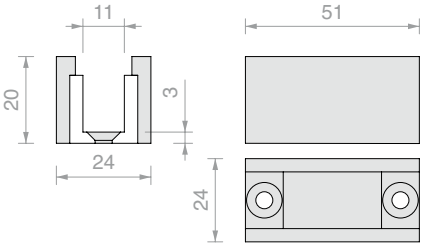

Art.	For glass thickness	Qty
LMGF	From **8** to **10.8** mm	1 Pc

SET OF DUAL-ACTION SOFTBREAK DAMPENER

Material: POM, Aluminium, Zamak

Provides damping when opening and closing

Art.	Load	Qty
LMDMP070ZKIT	From **40** to **70** kg	1 Pc
LMDMP100ZKIT	From **70** to **100** kg	1 Pc

DUAL ACTION SOFTBREAK DAMPER

Material: POM

Provides damping when opening and closing

To use the damper is also necessary the presence of a support clamp and 1or 2 activators depending on the side to be amortized

Art.	Load	Qty
LMDMP070Z	From **40** to **70** kg	1 Pc
LMDMP100Z	From **70** to **100** kg	1 Pc

SUPPORTING CLAMP FOR DAMPER

Material: Aluminium

Art.	Qty
LMPS-PSD62	1 Pc

ACTIVATOR FOR DAMPER

Material: Zamak

Art.	Qty
LMSIN-GA55	1 Pc

SYNCHRONISATION KIT

Art.	Qty
LMSIN-AC55	1 Pc

Forme

Smaller profiles for finishing glass door panels.
Applied to the glass with a 0.5 mm thick two-sided tape, silicone or UV bonding.
Select the right guide and accessories for holding the glass and your edging profile.

FLAT PROFILE FORME SERIES

Material: Aluminium

Finish: /6 /88 /97 /RAL

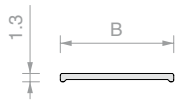

Art.	B	Length	Qty
FOP10.30	**10** mm	**3000** mm	1 Pc
FOP15.30	**15** mm	**3000** mm	1 Pc
FOP20.30	**20** mm	**3000** mm	1 Pc

U PROFILE, FORME SERIES

Material: Aluminium

Finish: /6 /88 /97 /RAL

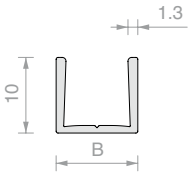

Art.	B	Length	For glass	Qty
FOU1011.30	**10.8** mm	**3000** mm	**8** mm	1 Pc
FOU1013.30	**12.8** mm	**3000** mm	**10** mm	1 Pc

TESA® ACX^{plus} DOUBLE-SIDED TAPE

Transparent double-sided tape for fixing glass, steel and aluminium.

The paper liner makes manual application of the tape easier.

Art.	Dimensions	Thickness	Qty
TS250065	**6** mm x **25** m	**0.5** mm	1 Pc
TS250125	**12** mm x **25** m	**0.5** mm	1 Pc
TS250155	**15** mm x **25** m	**0.5** mm	1 Pc

FLOOR GUIDE

Material: Aluminium

Finish: /88 /97 /R2

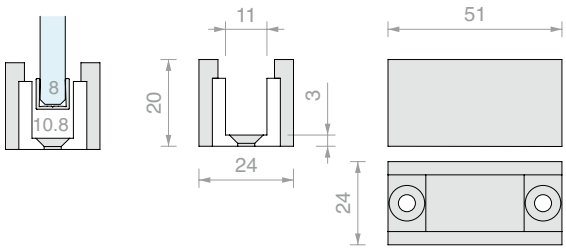

Art.	For profile	Qty
LMGF	FOU1011	1 Pc

ADAPTOR FOR GUIDE LMGF

Accessory for inserting into the LMGF floor guide

Material: plastic

Finish: /56

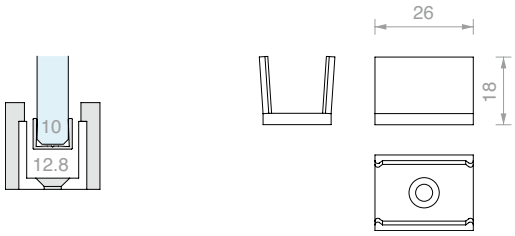

Art.	For profile	Qty
LMGF13-POM	FOU1013	1 Pc

LM VETRO

Design

LM VETRO a new look for one of LOGLI's most popular classics.
Design, functionality and a fresh appearance with every installation option.

Available with versions without holes in the glass or with notch,
for panels with dampers and synchronisation.

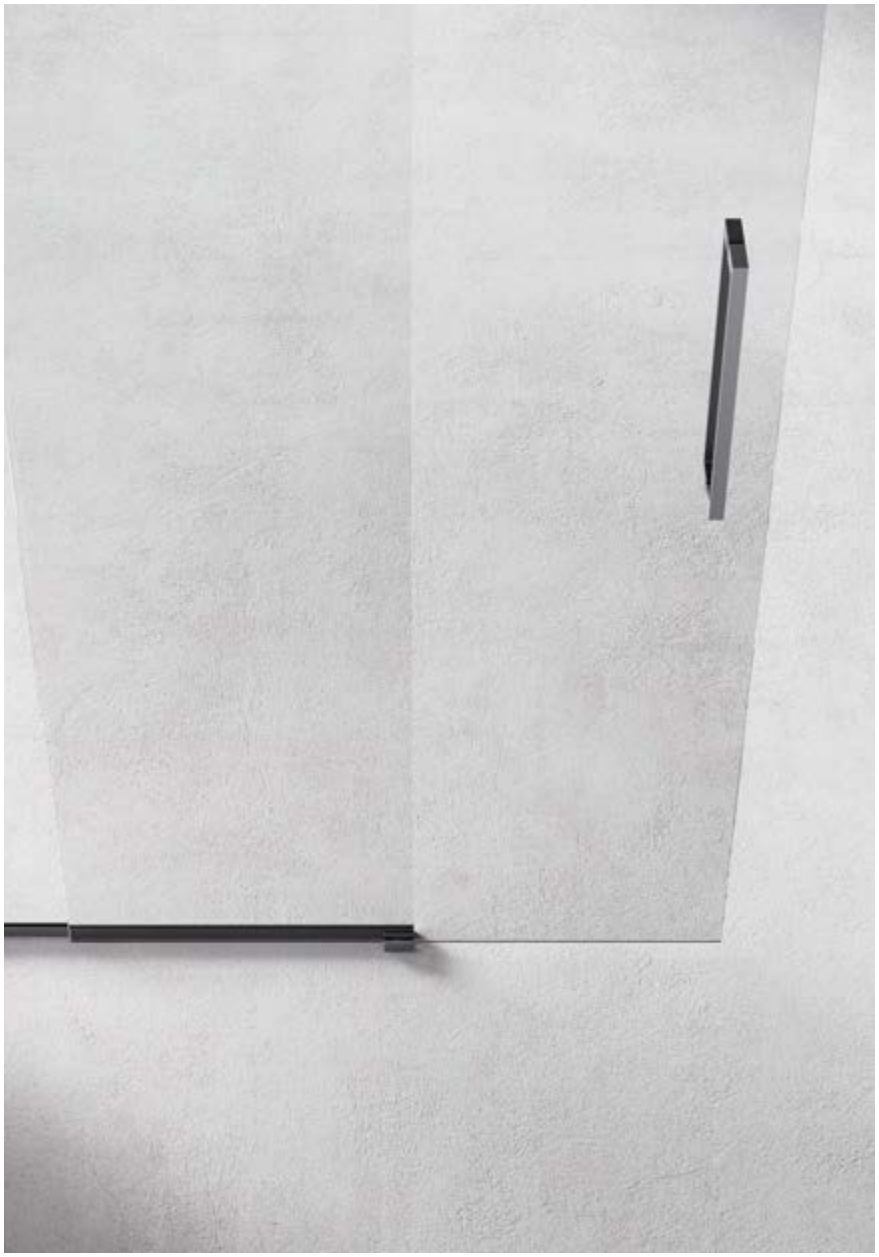

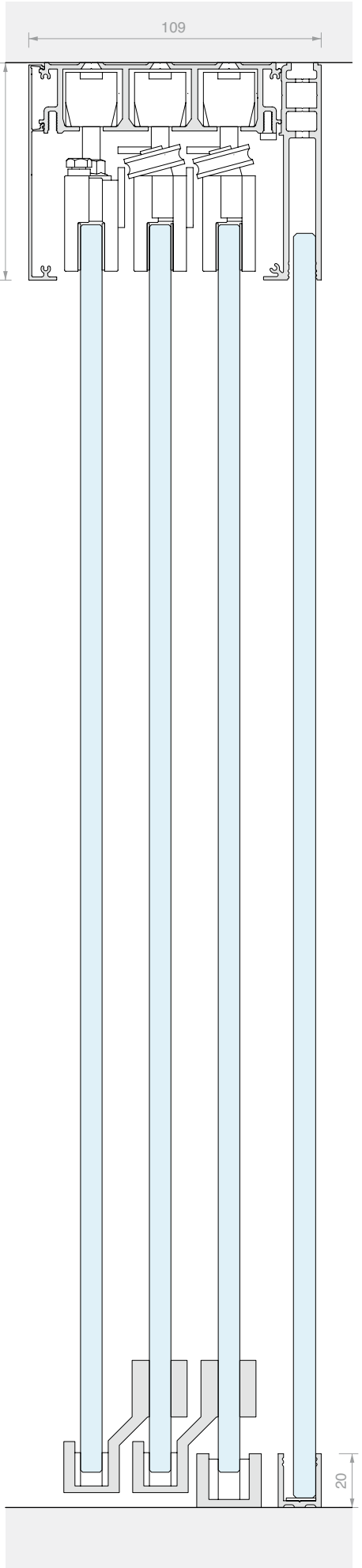

/6
Matt black

/88
Brushed steel effect aluminium

/97
Matt aluminium

LM VETRO

Technical properties

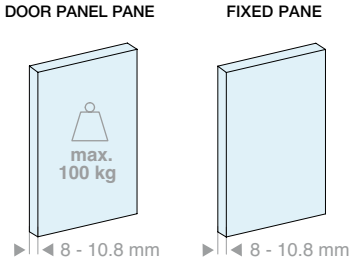

2 types of installation

Ceiling

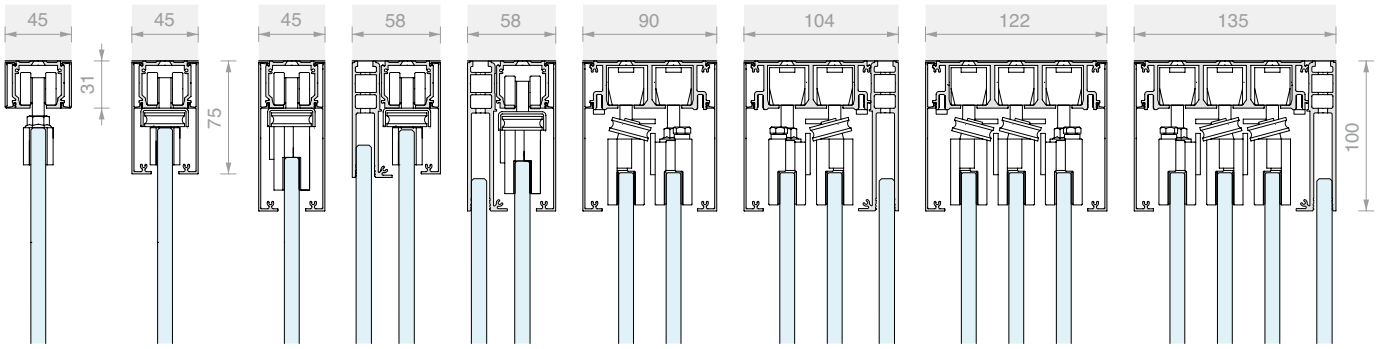

1 way | 1 way + fixed | 2-way | 2 way + fixed | 3-way | 3 way + fixed

Wall

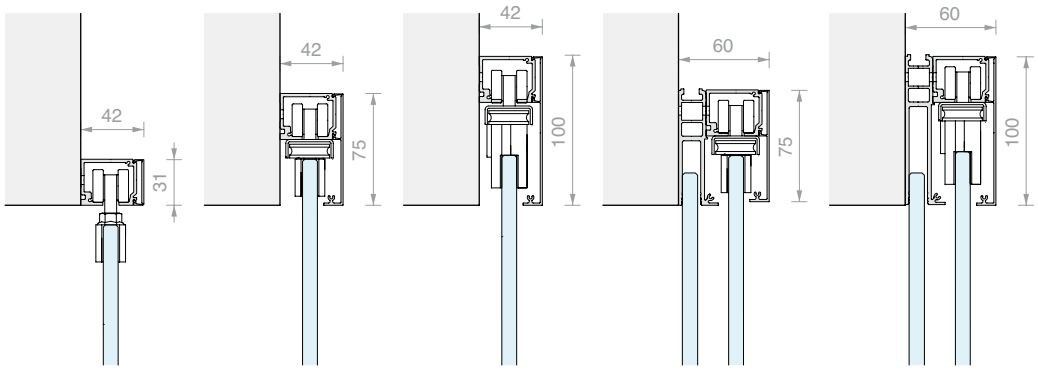

1 way | 1 way + fixed

3 types of cover

h = 31 mm

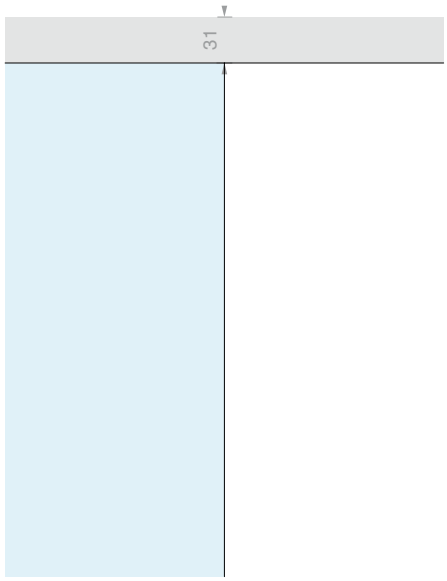

h = 75 mm

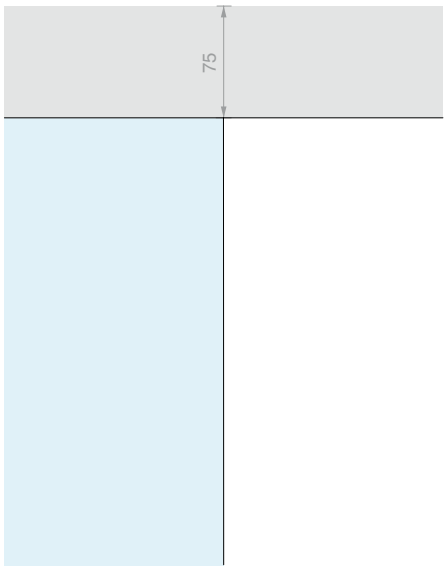

h = 100 mm

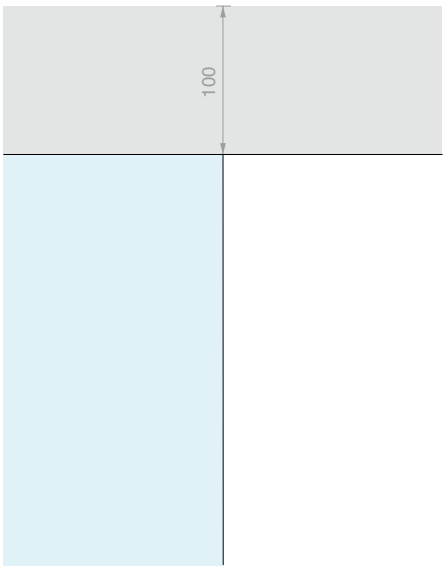

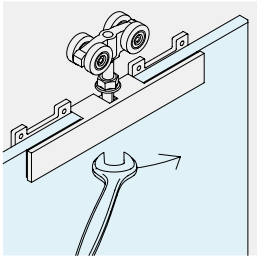

CERPOS SERIES 170
Clamp with machining of the glass, for use with covers h = 31 mm and h = 75 mm.

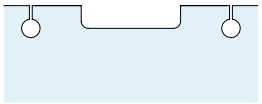

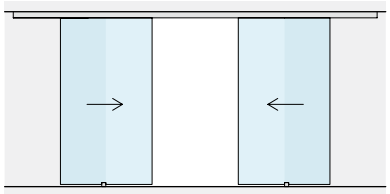

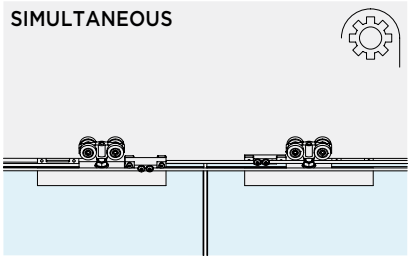

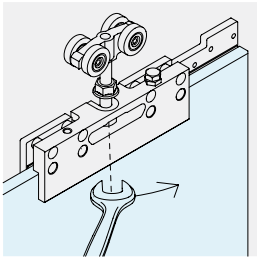

CERPOS SERIES 500
Clamp without machining of the glass, for use with cover h = 100 mm.

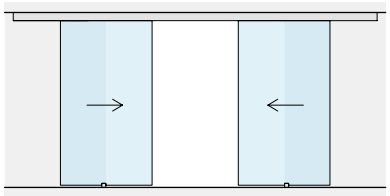

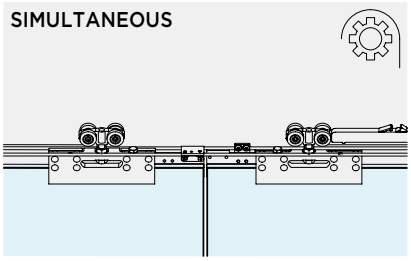

DOOR PANEL ADJUSTMENT
The height of each roller can be adjusted to adjust the position of the panel by ± 3 mm.

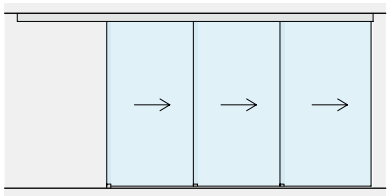

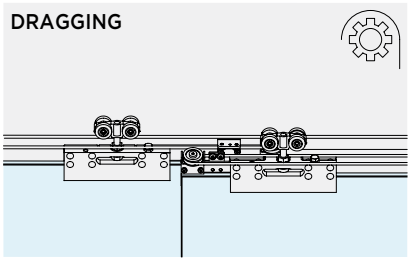

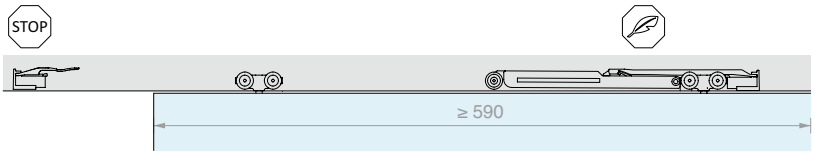

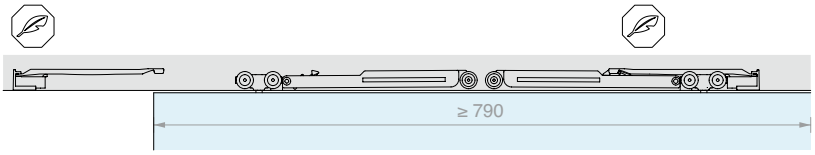

SOFT CLOSE
The use of dampers gives a delicate and controlled opening and closing.

SYNCHRONISM
The following accessories are available for synchronisation:

SIMULTANEOUS
2 moving door panels installed on the same track

DRAGGING
2 or 3 moving panels on a 2- or 3-way track

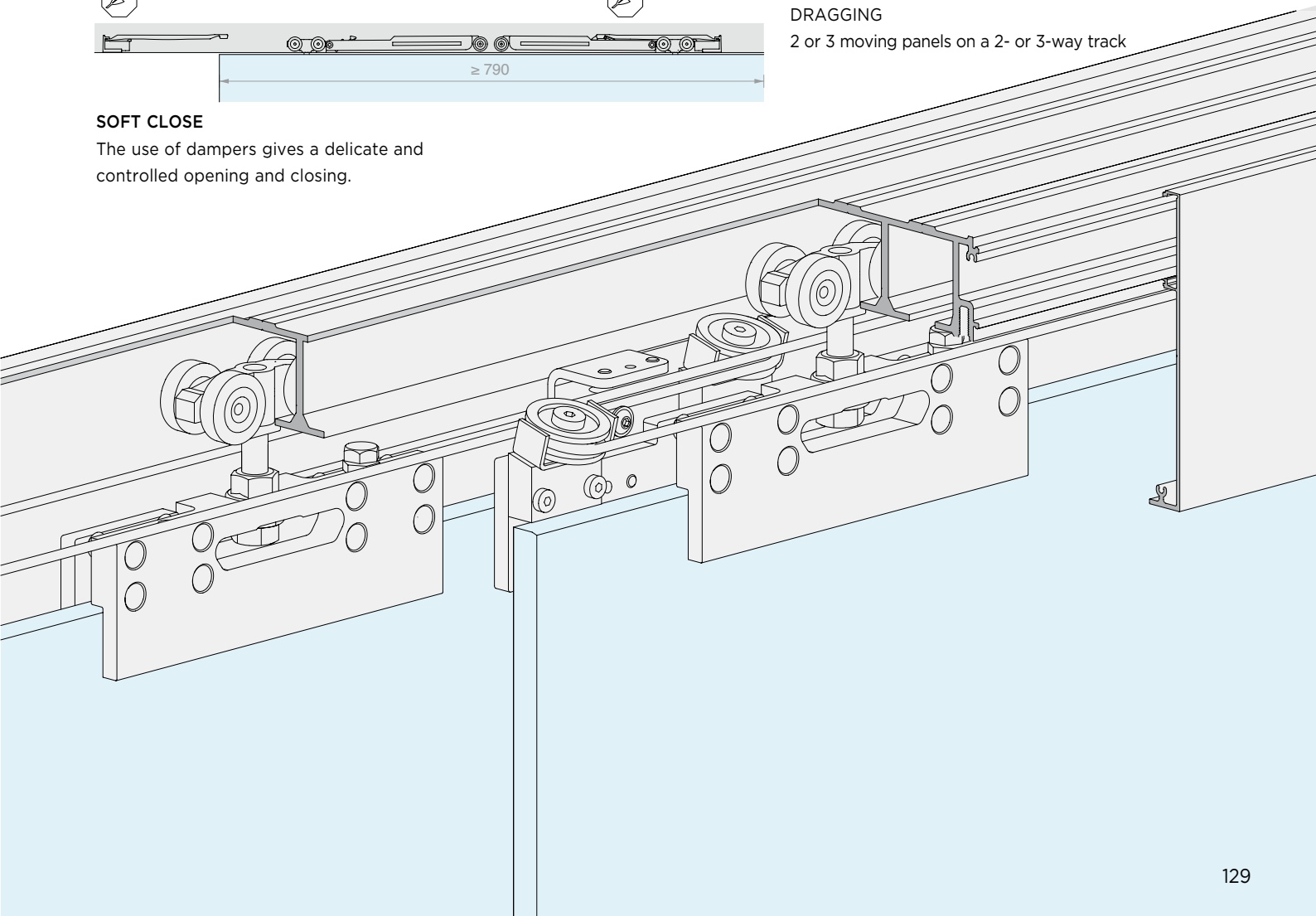

LM VETRO *Kit*

CEILING FIXING

1-WAY

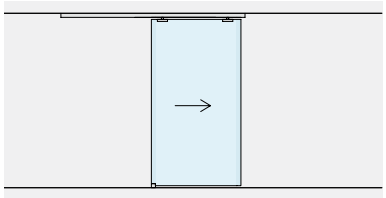

Page 134

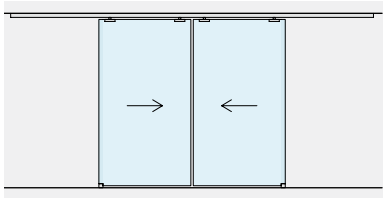

Page 142

1-WAY + FIXED

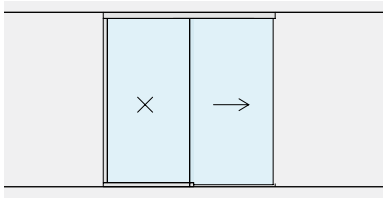

Page 150

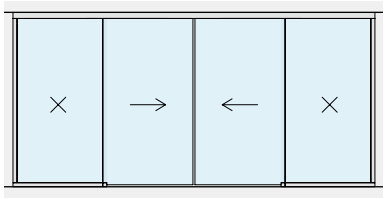

Page 156

2-WAY

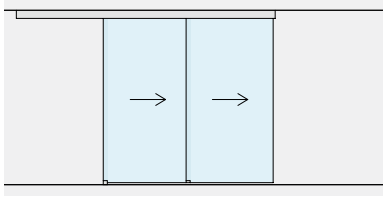

Page 162

2-WAY + FIXED

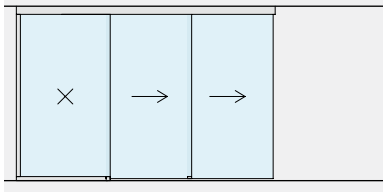

Page 166

3-WAY

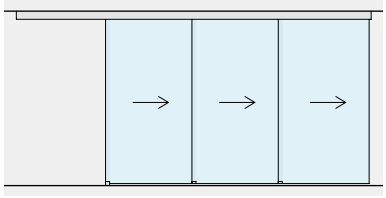

Page 170

3-WAY + FIXED

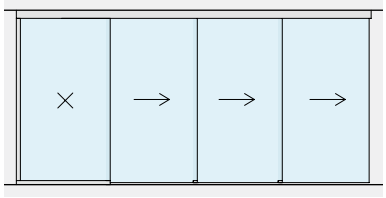

Page 174

WALL FIXING

1-WAY

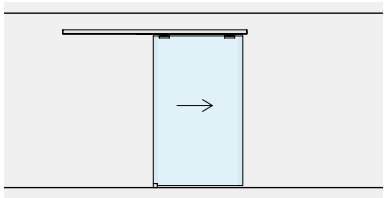

Page 178

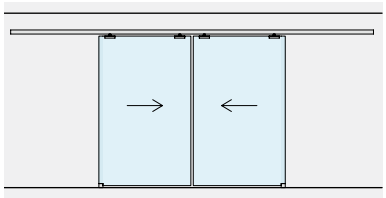

Page 186

1-WAY + FIXED

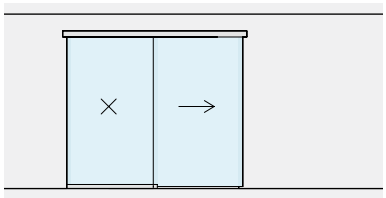

Page 194

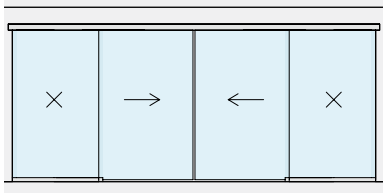

Page 200

SLIDING DOOR KIT, CEILING FIXING
SINGLE DOOR WITH VISIBLE CLAMPS

Material: Aluminium
Finish: /6 /88 /97

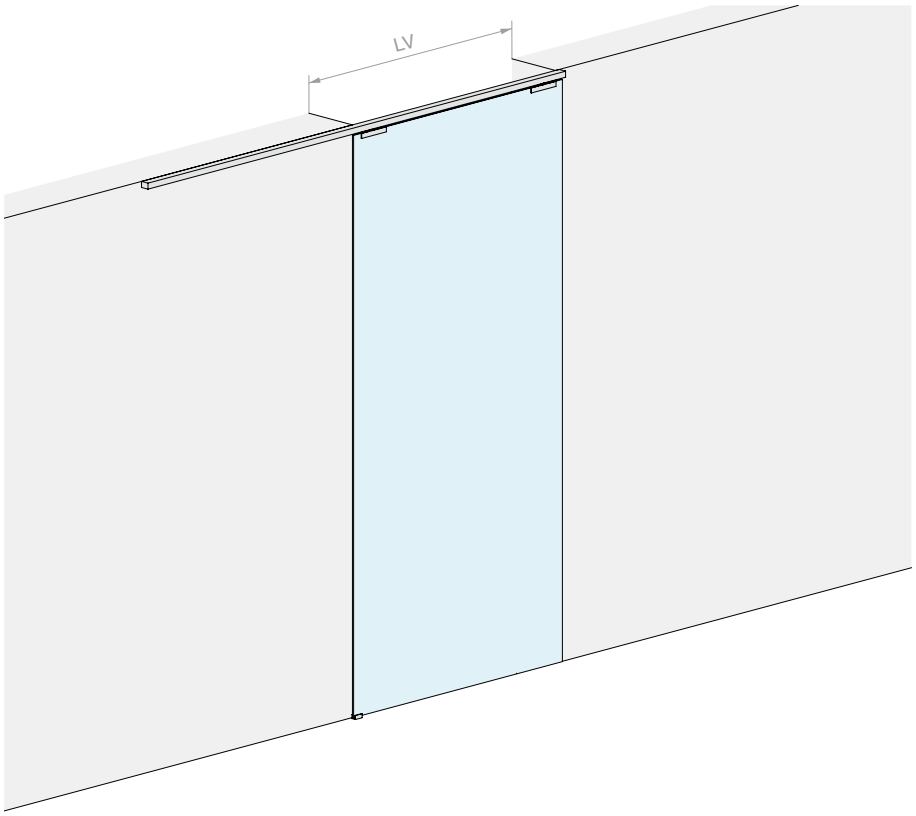

DOOR OPENING SIZE

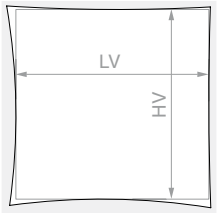

HV max: **3000** mm

DOOR PANEL PANE

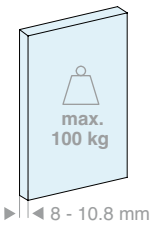

DOOR PANEL PANE

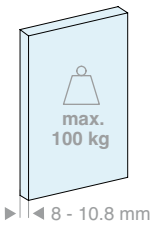

Kit comprising:

Art.	Description	Qty
LM21.200	Ceiling fixing track	1 Pc
LM3120.200	Track cover	2 Pcs
LM31044TP32	Finishing cap	2 Pcs
CERPOS170COV	Clamp	2 Pcs
057.3114.071	Roller with screw and nut	2 Pcs
057.3073.072	End stop with buffer	2 Pcs
LMGF	Floor guide	1 Pc
Optional		
042.3102.072	Softbreak damper, 20-60 kg	1 Pc
042.3102.071	Softbreak damper, 61-100 kg	1 Pc

Kit comprising:

Art.	Description	Qty
LM21.300	Ceiling fixing track	1 Pc
LM3120.300	Track cover	2 Pcs
LM31044TP32	Finishing cap	2 Pcs
CERPOS170COV	Clamp	2 Pcs
057.3114.071	Roller with screw and nut	2 Pcs
057.3073.072	End stop with buffer	2 Pcs
LMGF	Floor guide	1 Pc
Optional		
042.3102.072	Softbreak damper, 20-60 kg	1 Pc
042.3102.071	Softbreak damper, 61-100 kg	1 Pc

Art.	LV max	Qty
LMV3111.200	**920** mm	1 Pc

Art.	LV max	Qty
LMV3111.300	**1420** mm	1 Pc

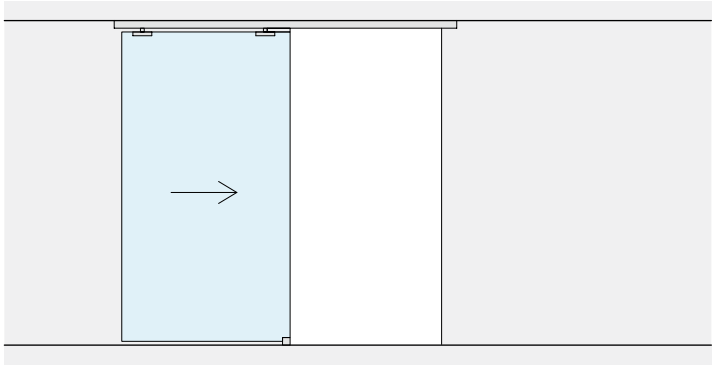

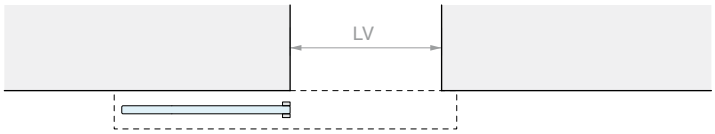

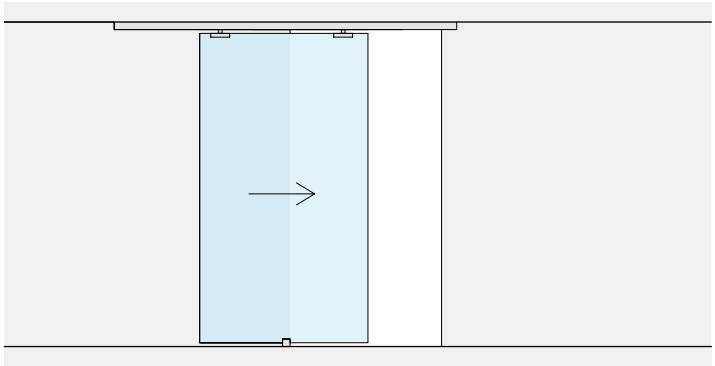

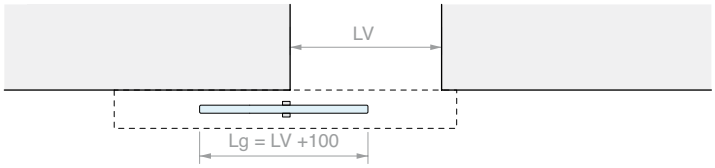

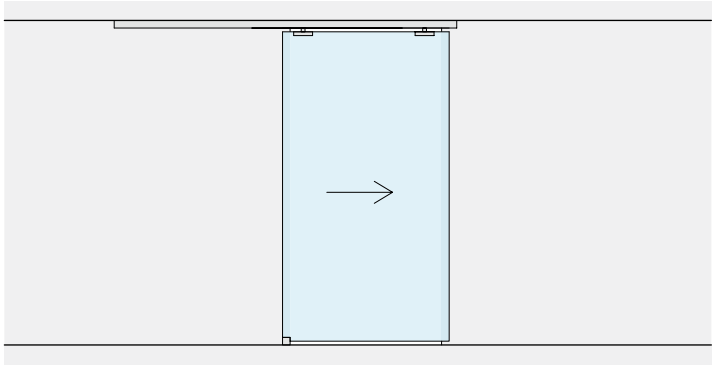

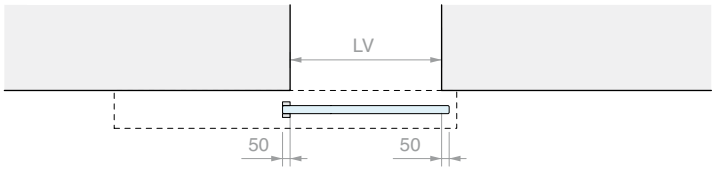

MACHINING OF GLASS FOR CERPOS170

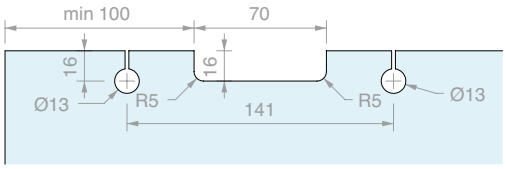

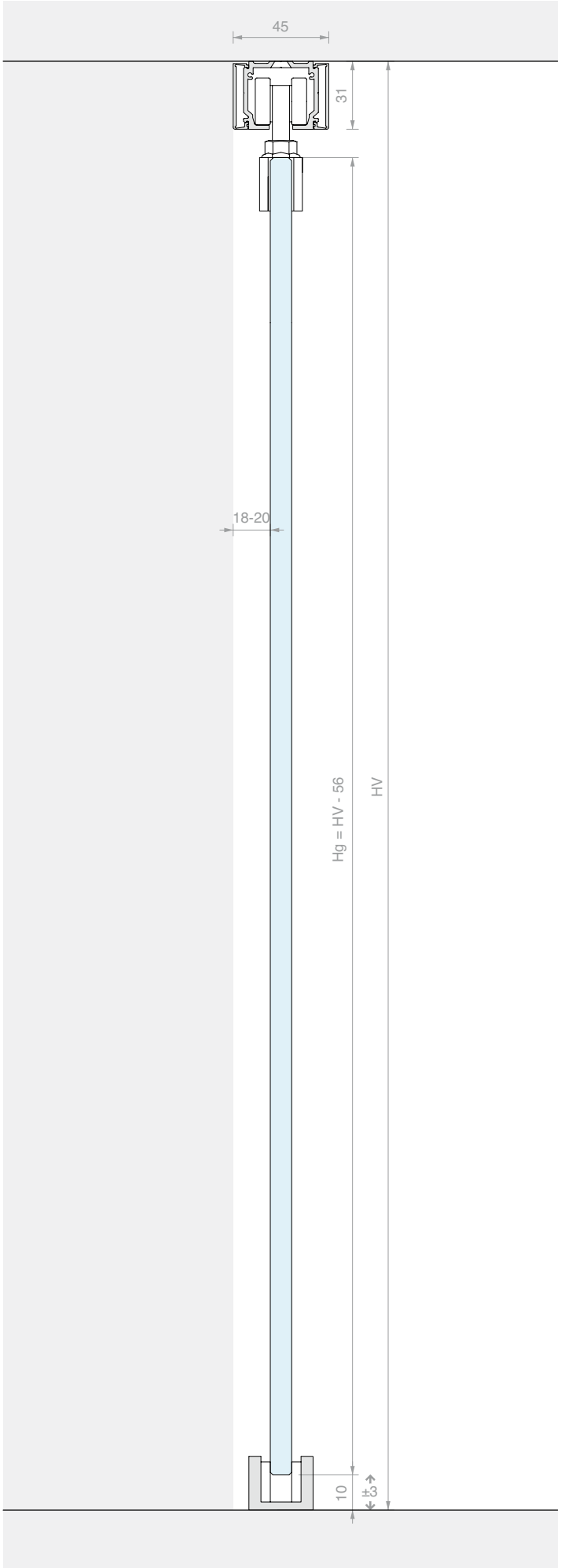

SLIDING DOOR KIT, CEILING FIXING
SINGLE DOOR WITH LOW COVER

Material: Aluminium
Finish: /6 /88 /97

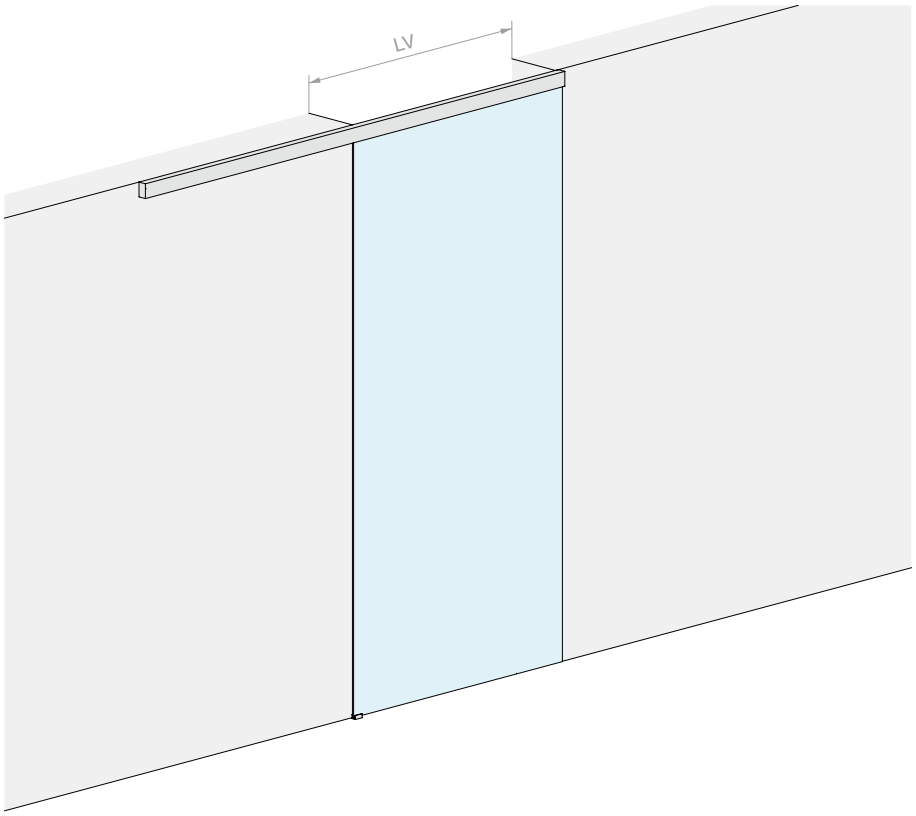

DOOR OPENING SIZE

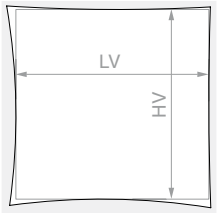

HV max: **3000** mm

DOOR PANEL PANE

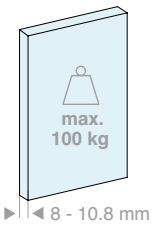

DOOR PANEL PANE

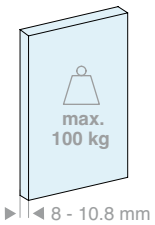

Kit comprising:

Art.	Description	Qty
LM21.200	Ceiling fixing track	1 Pc
LM0075C.200	Track cover	2 Pcs
LM75044TP33	Finishing cap	2 Pcs
CERPOS170ALL	Clamp	2 Pcs
057.3114.071	Roller with screw and nut	2 Pcs
057.3073.072	End stop with buffer	2 Pcs
LMGF	Floor guide	1 Pc
Optional		
042.3102.072	Softbreak damper, 20-60 kg	1 Pc
042.3102.071	Softbreak damper, 61-100 kg	1 Pc

Kit comprising:

Art.	Description	Qty
LM21.300	Ceiling fixing track	1 Pc
LM0075C.300	Track cover	2 Pcs
LM75044TP33	Finishing cap	2 Pcs
CERPOS170ALL	Clamp	2 Pcs
057.3114.071	Roller with screw and nut	2 Pcs
057.3073.072	End stop with buffer	2 Pcs
LMGF	Floor guide	1 Pc
Optional		
042.3102.072	Softbreak damper, 20-60 kg	1 Pc
042.3102.071	Softbreak damper, 61-100 kg	1 Pc

Art.	LV max	Qty
LMV7511.200	**920** mm	1 Pc

Art.	LV max	Qty
LMV7511.300	**1420** mm	1 Pc

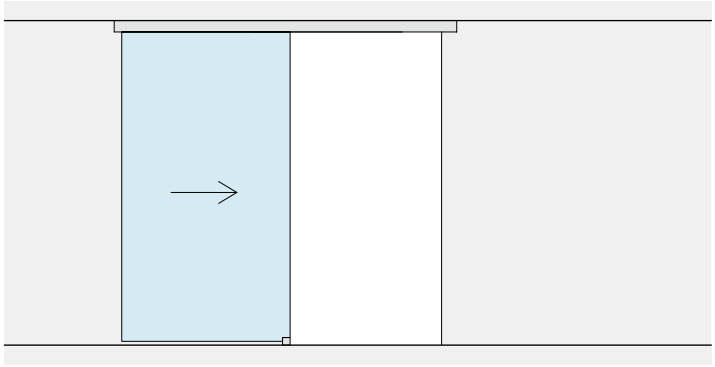

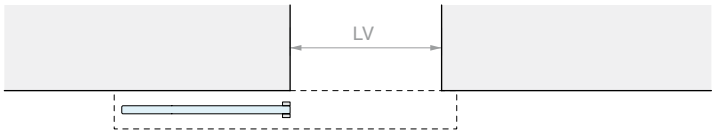

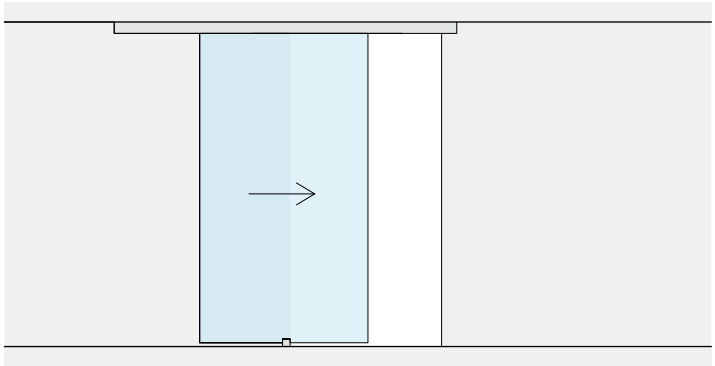

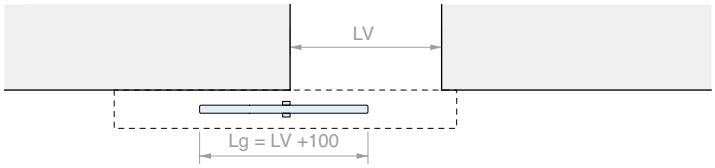

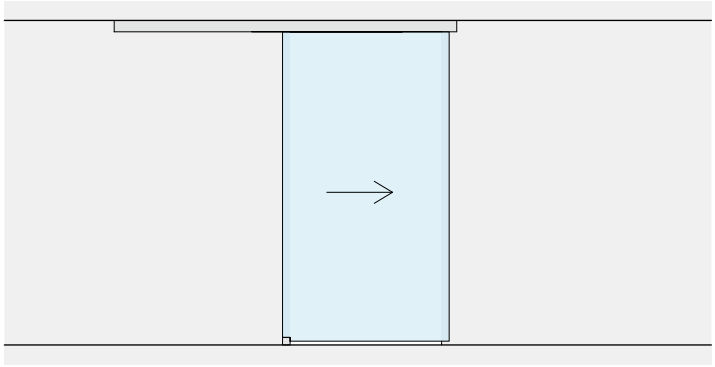

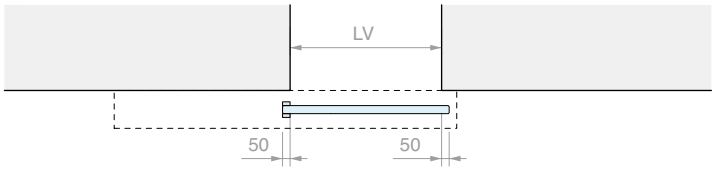

MACHINING OF GLASS FOR CERPOS170

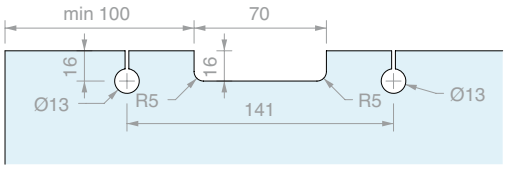

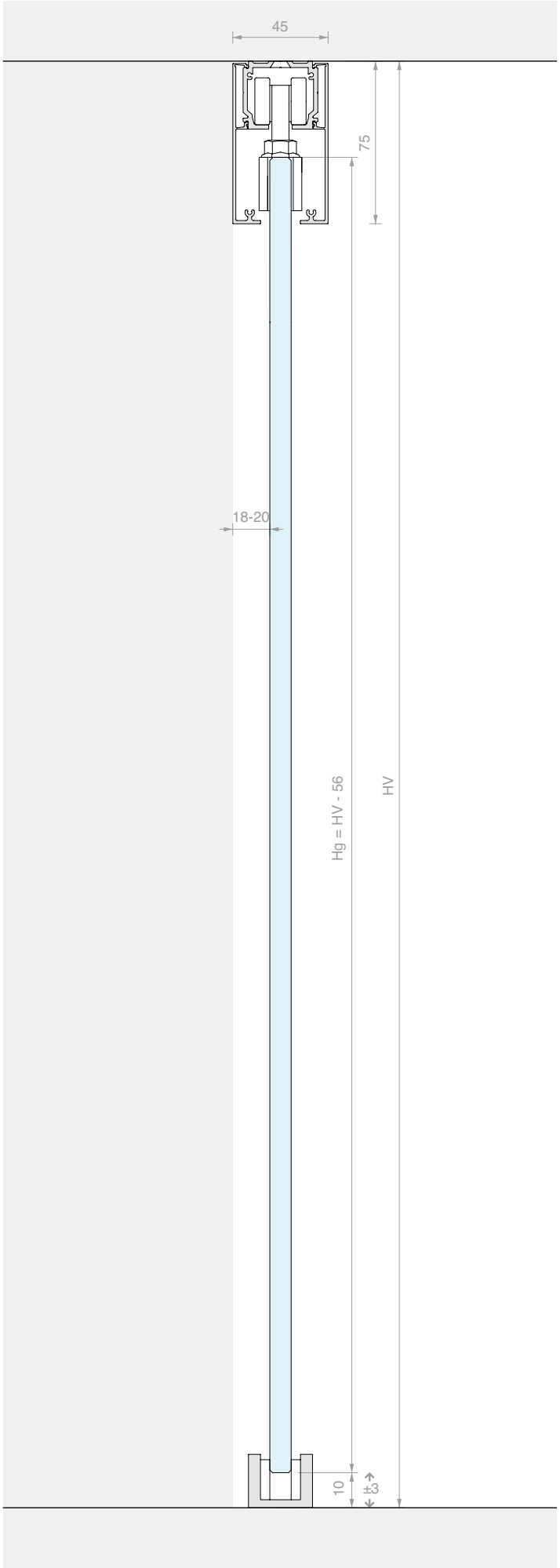

CEILING FIXING SLIDING DOOR KIT
SINGLE DOOR WITH HIGH COVER

Material: Aluminium
Finish: /6 /88 /97

WITHOUT HOLES IN THE GLASS

DOOR OPENING SIZE

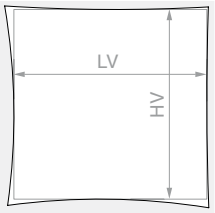

HV max: **3000** mm

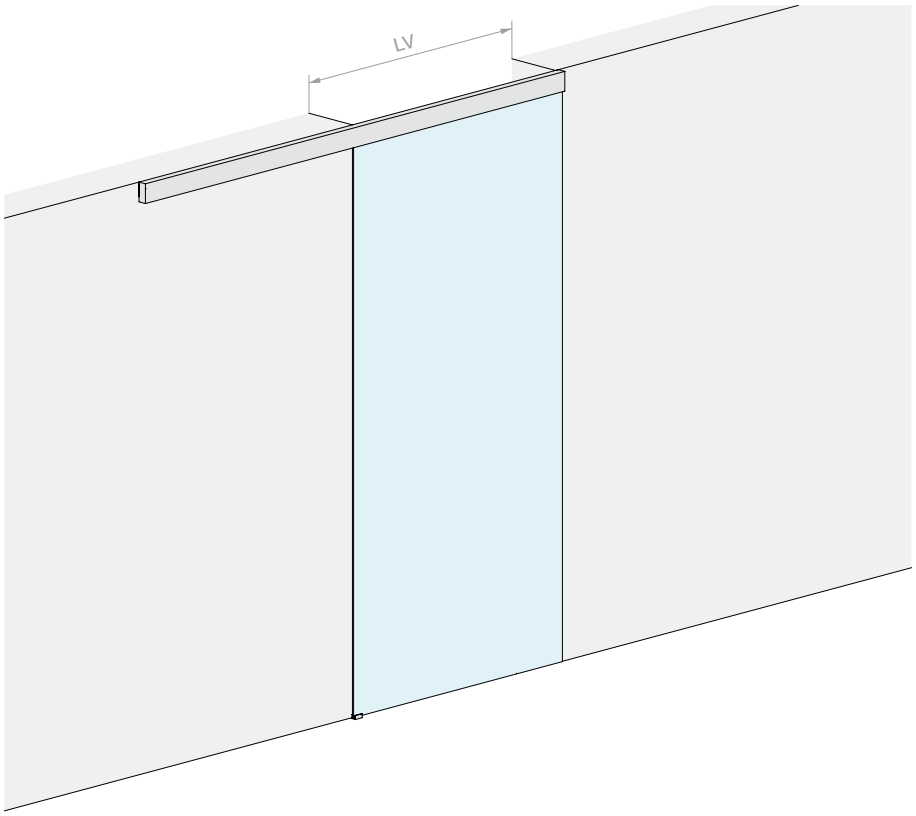

DOOR PANEL PANE

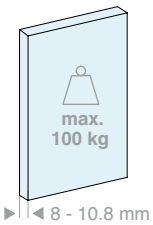

DOOR PANEL PANE

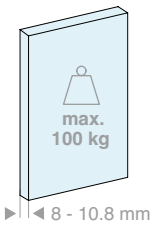

Kit comprising:

Art.	Description	Qty
LM21.200	Ceiling fixing track	1 Pc
LM0100C.200	Track cover	2 Pcs
LM10044TP33	Finishing cap	2 Pcs
CERPOS514	Clamp	2 Pcs
CARVIT8x40-A2	Roller with screw and bolt	2 Pcs
057.3073.072	End stop with buffer	2 Pcs
LMGF	Floor guide	1 Pc
Optional		
042.3102.072	Softbreak damper, 20-60 kg	1 Pc
042.3102.071	Softbreak damper, 61-100 kg	1 Pc

Kit comprising:

Art.	Description	Qty
LM21.300	Ceiling fixing track	1 Pc
LM0100C.300	Track cover	2 Pcs
LM10044TP33	Finishing cap	2 Pcs
CERPOS514	Clamp	2 Pcs
CARVIT8x40-A2	Roller with screw and bolt	2 Pcs
057.3073.072	End stop with buffer	2 Pcs
LMGF	Floor guide	1 Pc
Optional		
042.3102.072	Softbreak damper, 20-60 kg	1 Pc
042.3102.071	Softbreak damper, 61-100 kg	1 Pc

Art.	LV max	Qty
LMV10011.200	**920** mm	1 Pc

Art.	LV max	Qty
LMV10011.300	**1420** mm	1 Pc

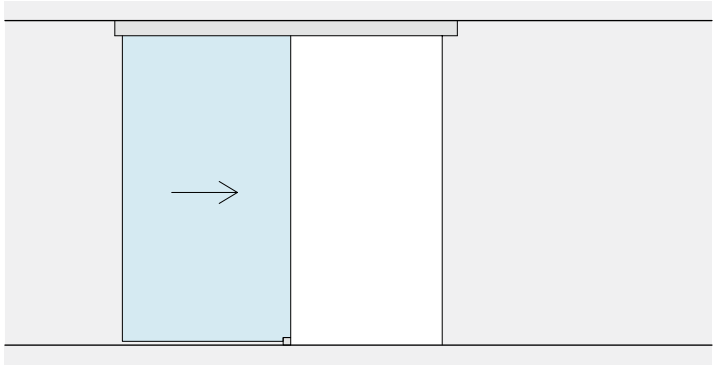

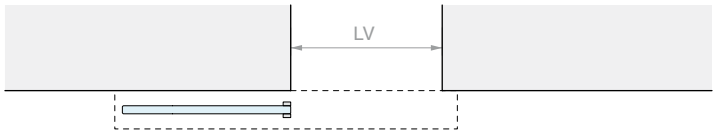
LV

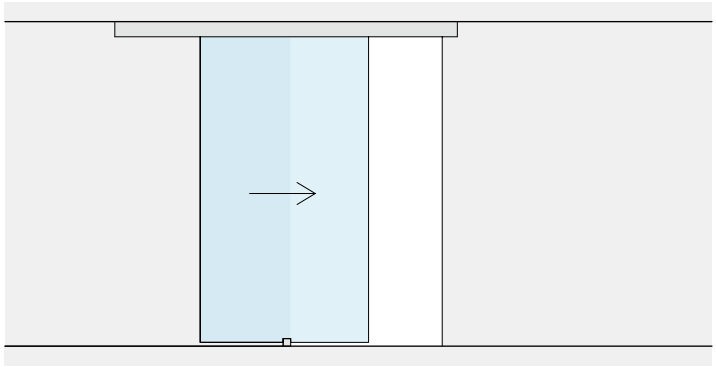

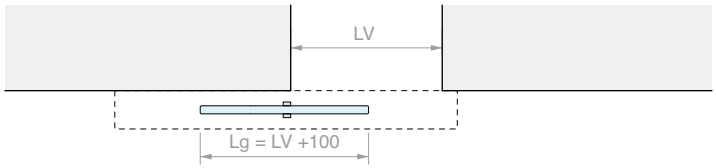
LV
Lg = LV +100

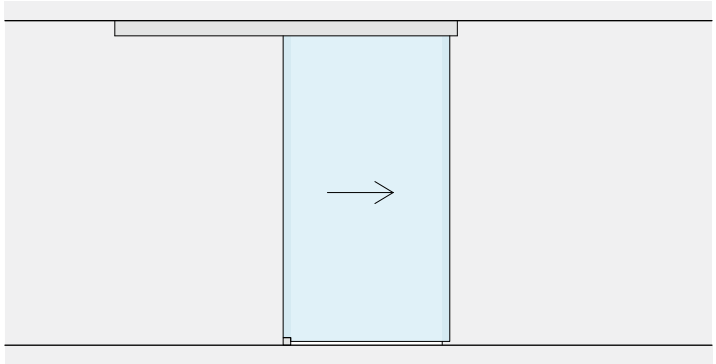

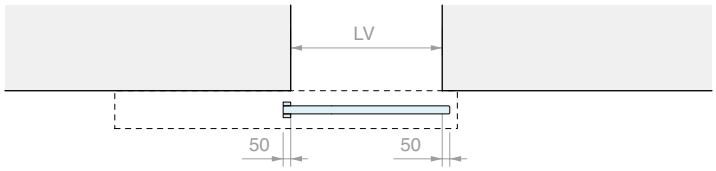
LV
50
50

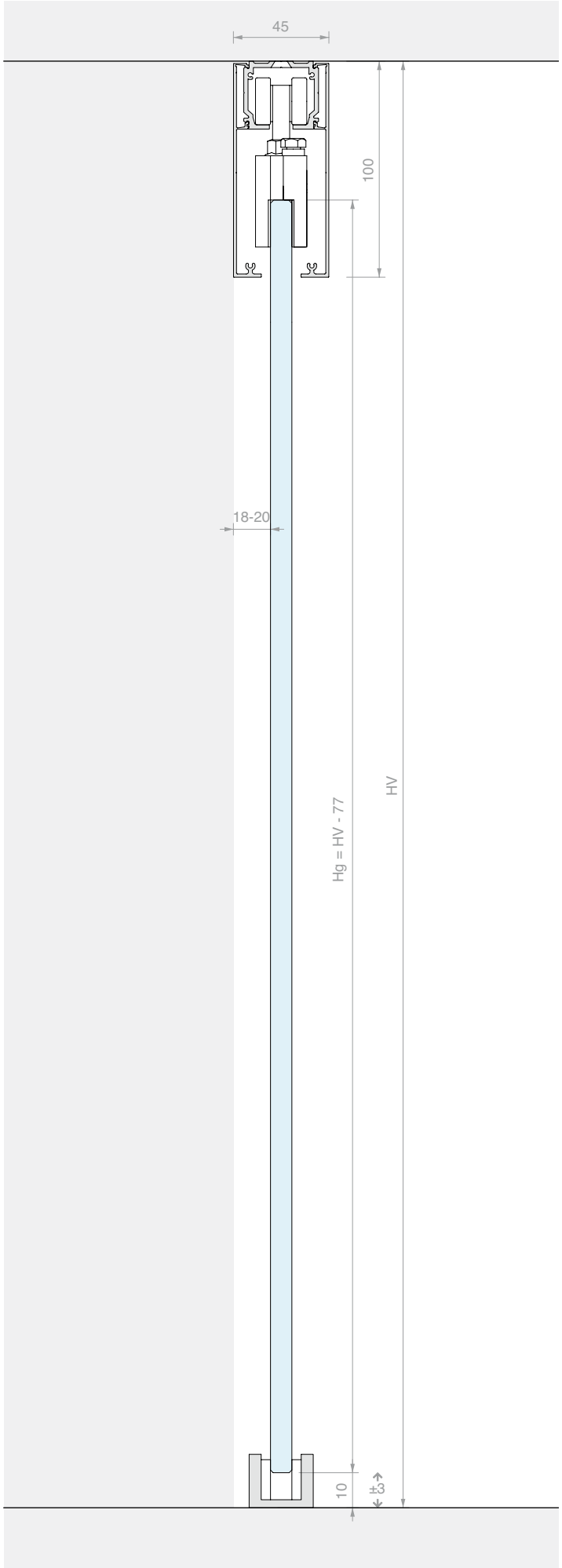
45
100
18-20
Hg = HV - 77
HV
10
±3

SLIDING DOOR KIT, CEILING FIXING
DOUBLE DOOR WITH VISIBLE CLAMPS

Material: Aluminium
Finish: /6 /88 /97

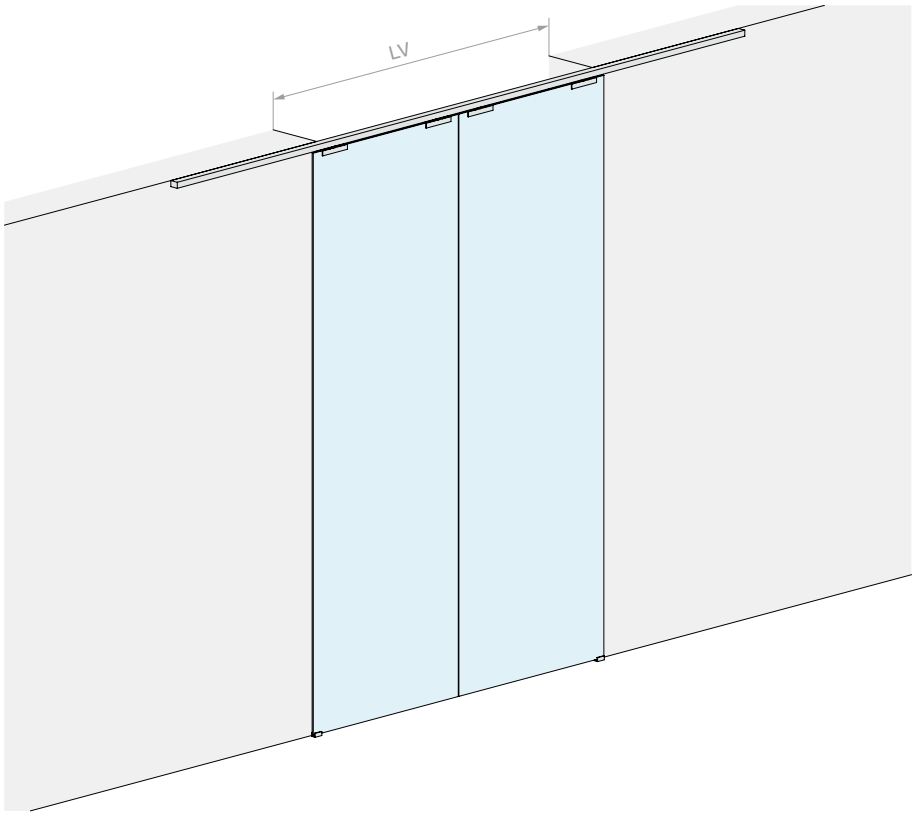

DOOR OPENING SIZE

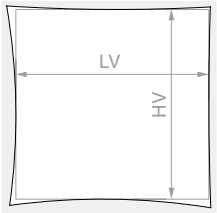

HV max: **3000** mm

DOOR PANEL PANE

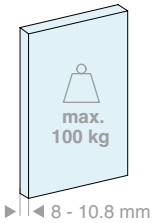

Kit comprising:

Art.	Description	Qty
LM21.400	Ceiling fixing track	1 Pc
LM3120.400	Track cover	2 Pcs
LM31044TP32	Finishing cap	2 Pcs
CERPOS170COV	Clamp	4 Pcs
057.3114.071	Roller with screw and nut	4 Pcs
057.3073.072	End stop with buffer	4 Pcs
LMGF	Floor guide	2 Pcs
Optional		
042.3102.072	Softbreak damper, 20-60 kg	2 Pcs
042.3102.071	Softbreak damper, 61-100 kg	2 Pcs

Art.	LV max	Qty
LMV3111C.400	**1940** mm	1 Pc

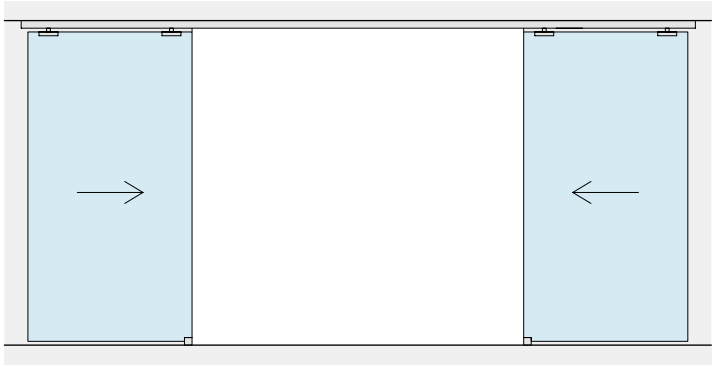

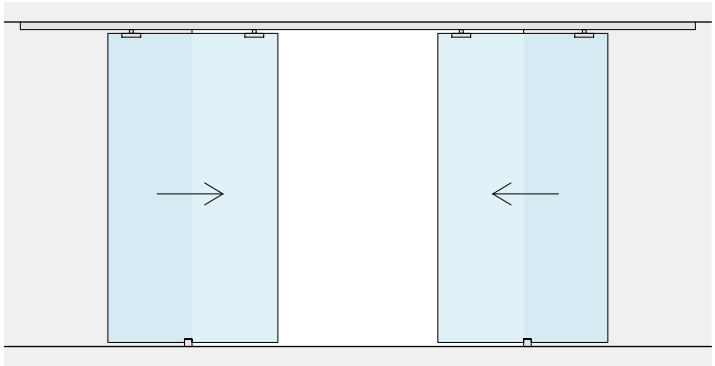

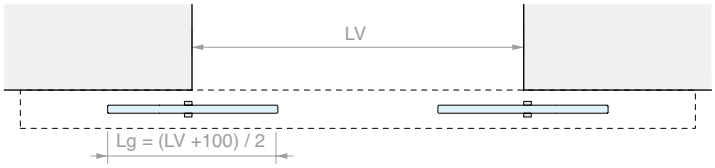

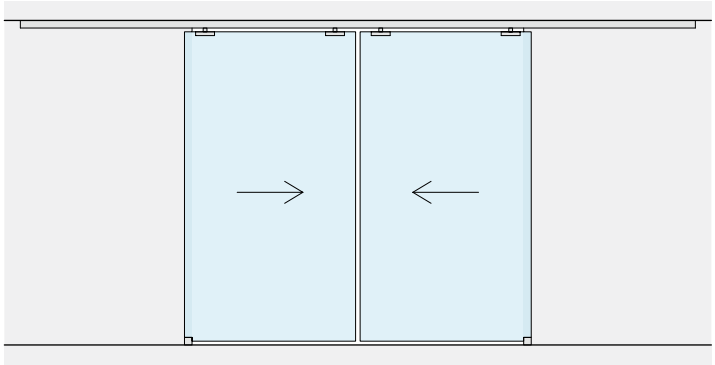

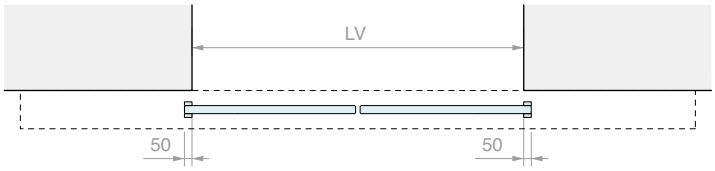

MACHINING OF GLASS FOR CERPOS170

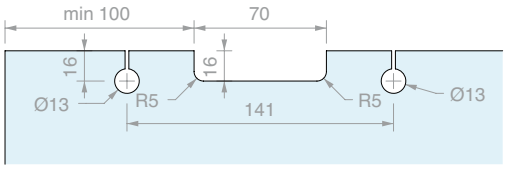

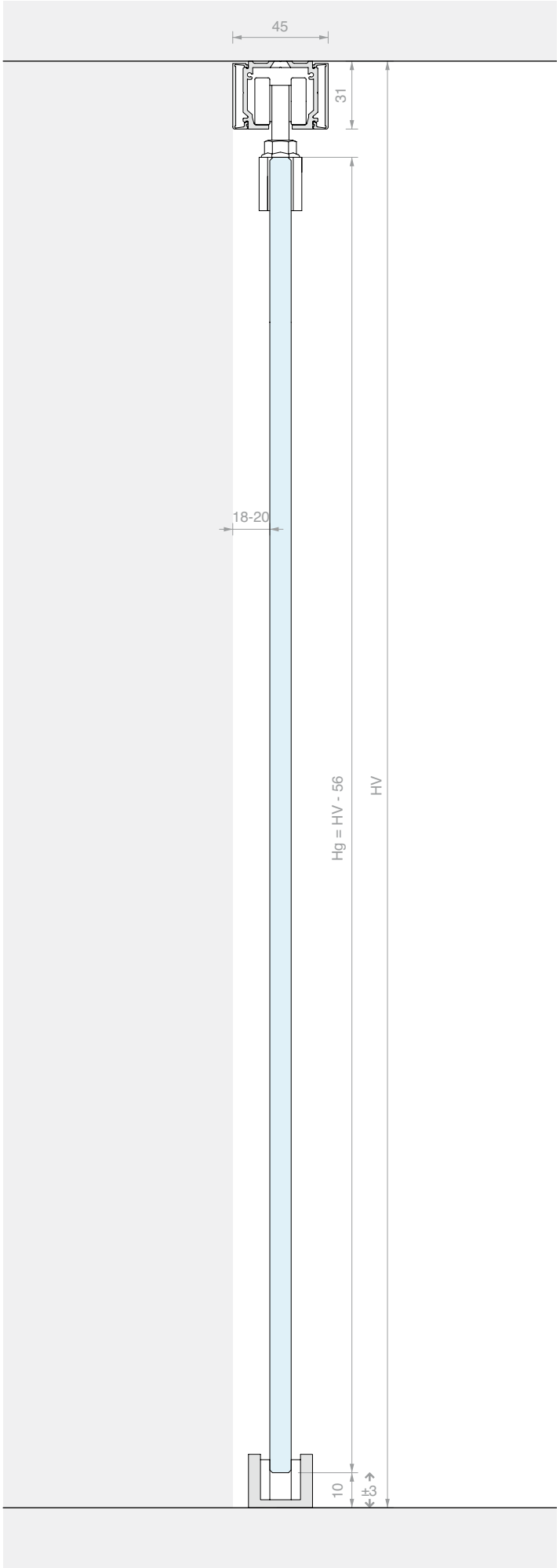

SLIDING DOOR KIT, CEILING FIXING
DOUBLE DOOR SYNCHRONISED WITH LOW COVER

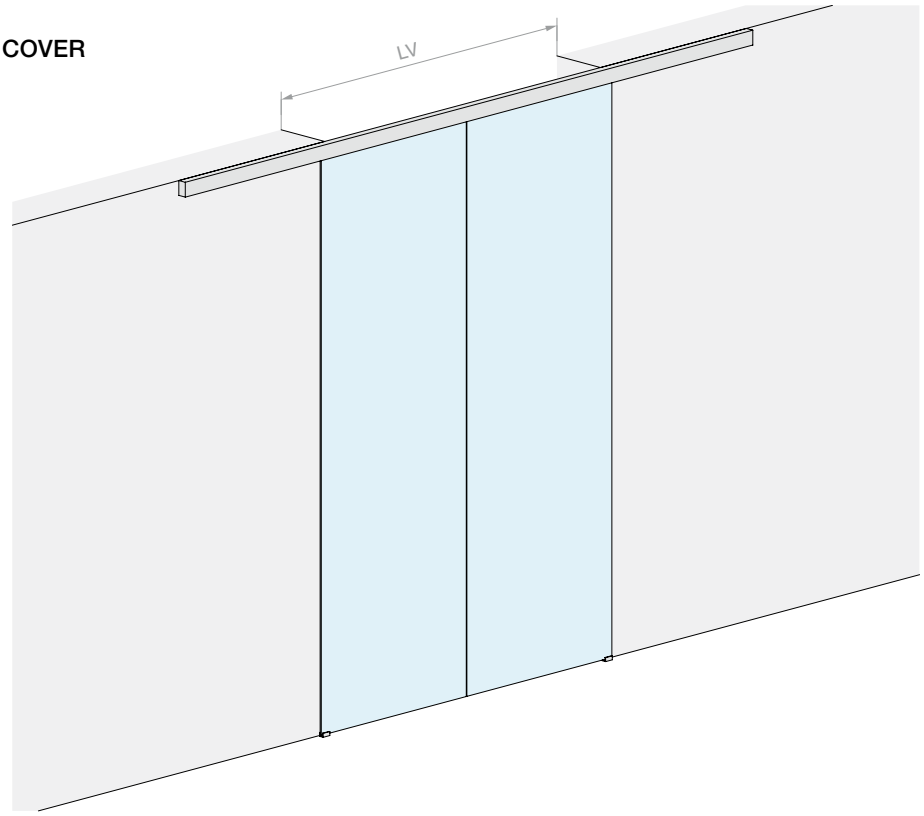

Material: Aluminium
Finish: /6 /88 /97

DOOR OPENING SIZE

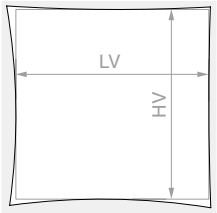

HV max: **3000** mm

DOOR PANEL PANE

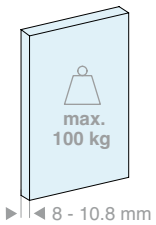

Kit comprising:

Art.	Description	Qty
LM21.400	Ceiling fixing track	1 Pc
LM0075C.400	Track cover	2 Pcs
LM75042TP33	Finishing cap	2 Pcs
CERPOS170ALL	Clamp	2 Pcs
CERPOS170SYNC	Clamp for synchronisation	2 Pcs
057.3114.071	Roller with screw and nut	4 Pcs
057.3073.071	End stop without buffer	4 Pcs
LMGF	Floor guide	2 Pcs
LMSIN-2AC170	Synchronisation kit	1 Pc
Optional		
042.3102.072	Softbreak damper, 20-60 kg	2 Pcs
042.3102.071	Softbreak damper, 61-100 kg	2 Pcs

Art.	LV max	Qty
LMV7511C.400	**1900** mm	1 Pc

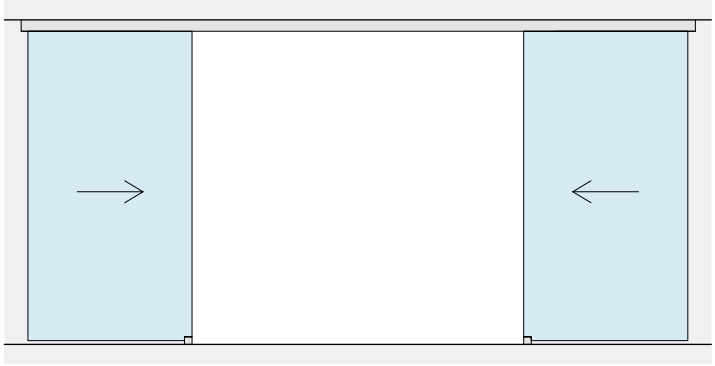

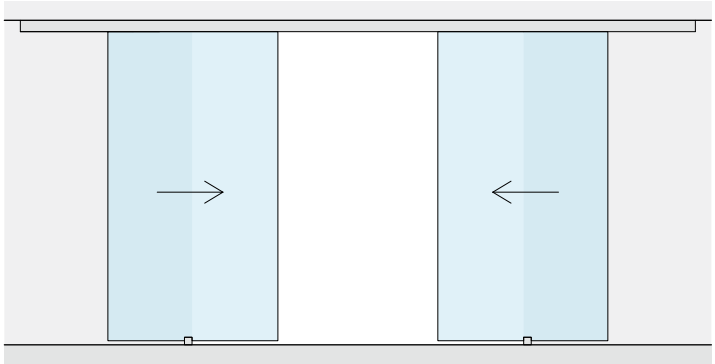

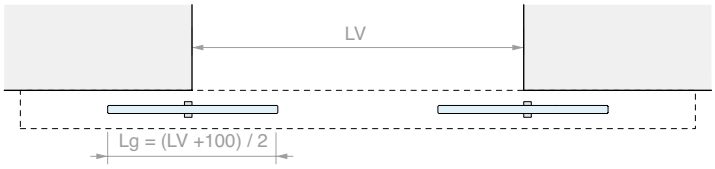

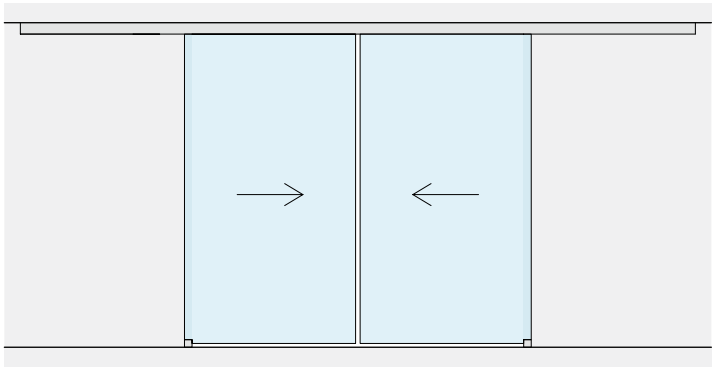

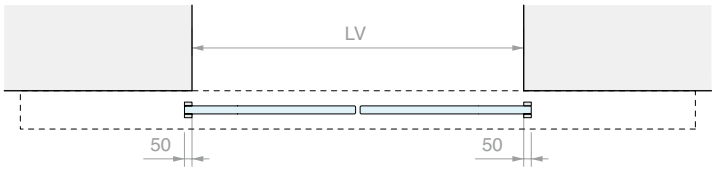

MACHINING OF GLASS FOR CERPOS170

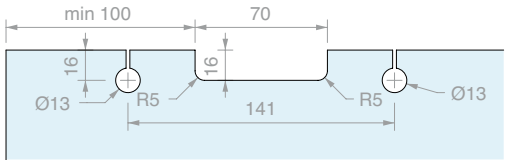

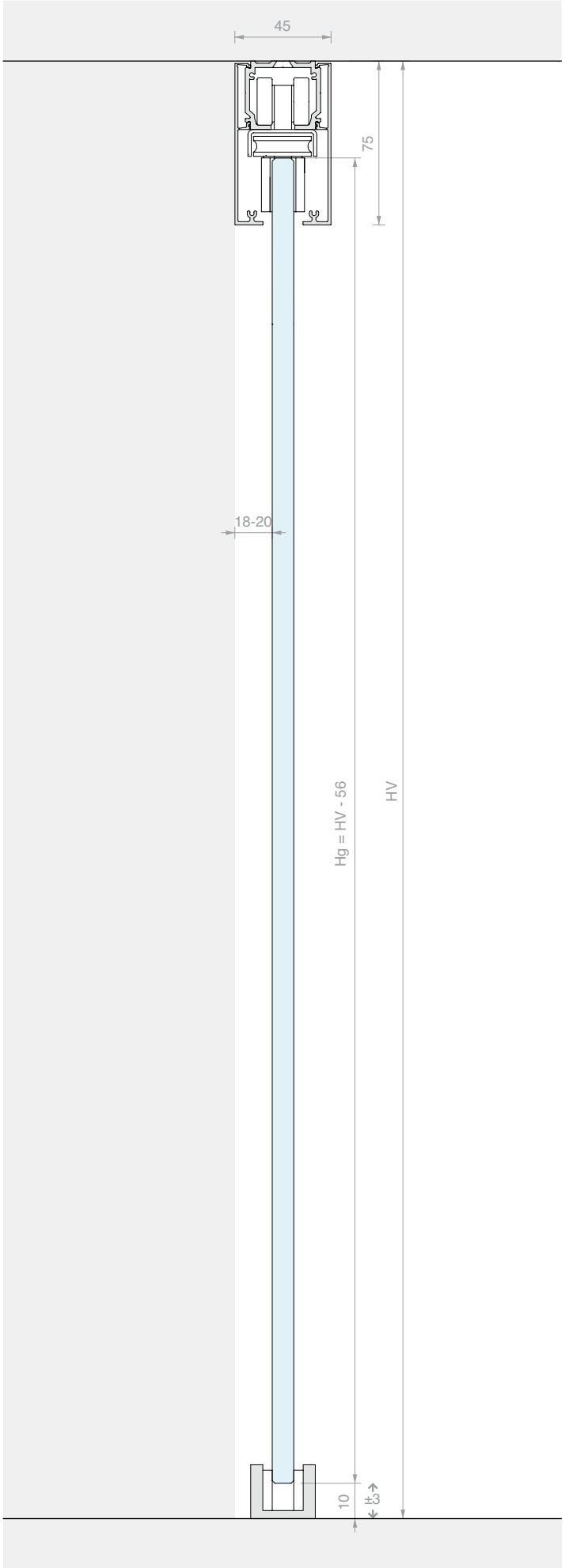

SLIDING DOOR KIT, CEILING FIXING
DOUBLE DOOR SYNCHRONISED WITH HIGH COVER

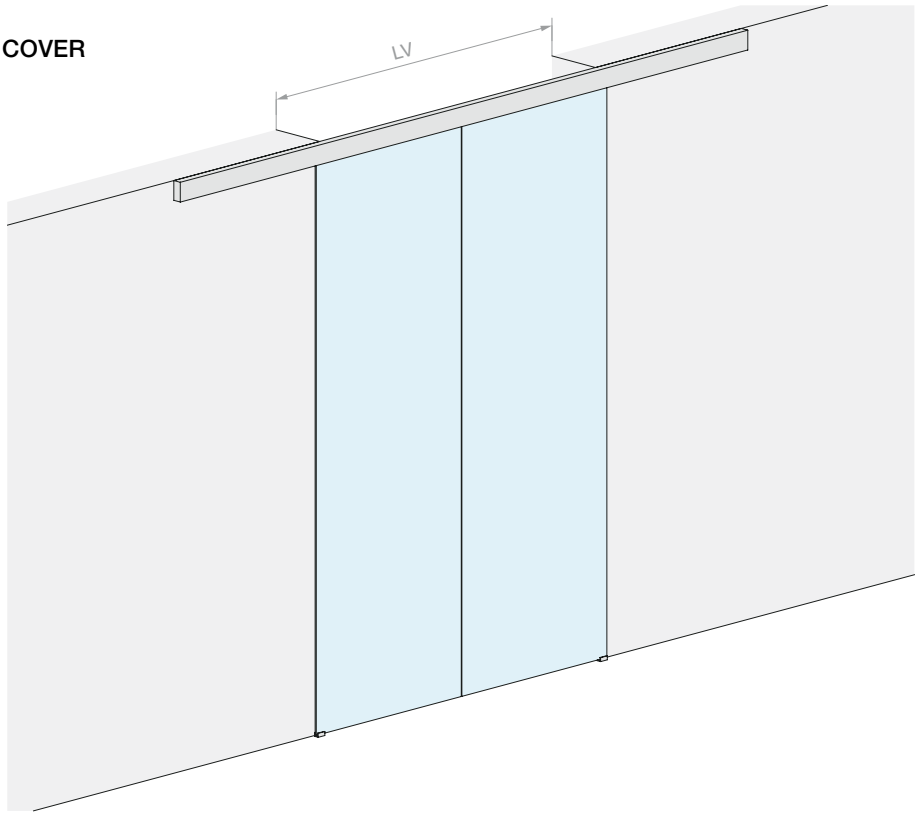

Material: Aluminium
Finish: /6 /88 /97

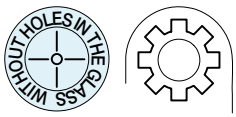

DOOR OPENING SIZE

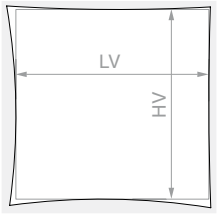

HV max: **3000** mm

DOOR PANEL PANE

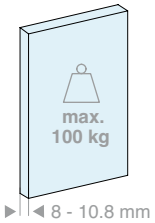

Kit comprising:

Art.	Description	Qty
LM21.400	Ceiling fixing track	1 Pc
LM0100C.400	Track cover	2 Pcs
LM10044TP33	Finishing cap	2 Pcs
CERPOS514	Clamp	2 Pcs
CERPOS514-C	Clamp for synchronisation	2 Pcs
CARVIT8X40-A2	Roller with screw and nut	4 Pcs
057.3073.071	End stop without buffer	4 Pcs
LMGF	Floor guide	2 Pcs
LMSIN-2AC500	Synchronisation kit	1 Pc
Optional		
042.3102.072	Softbreak damper, 20-60 kg	2 Pcs
042.3102.071	Softbreak damper, 61-100 kg	2 Pcs

Art.	LV max	Qty
LMV10011C.400	**1940** mm	1 Pc

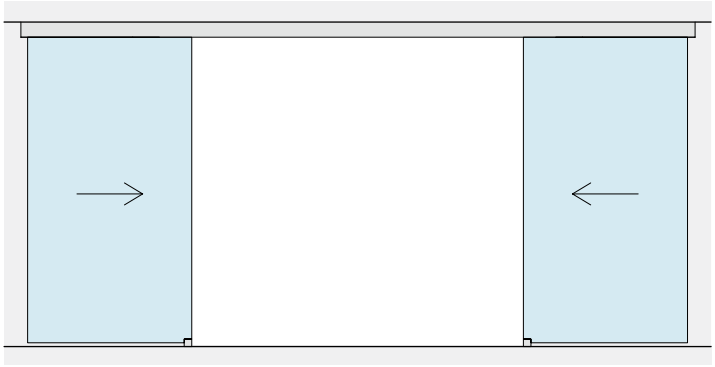

LV

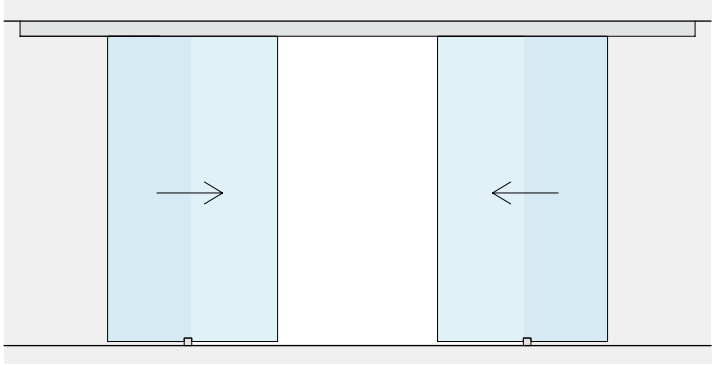

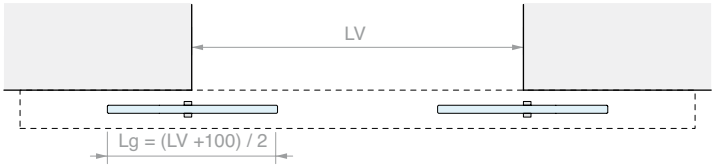
LV
Lg = (LV +100) / 2

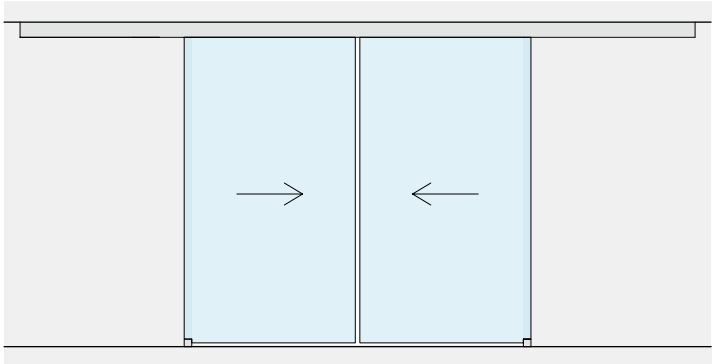

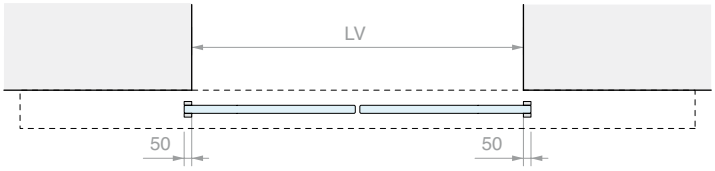
LV
50
50

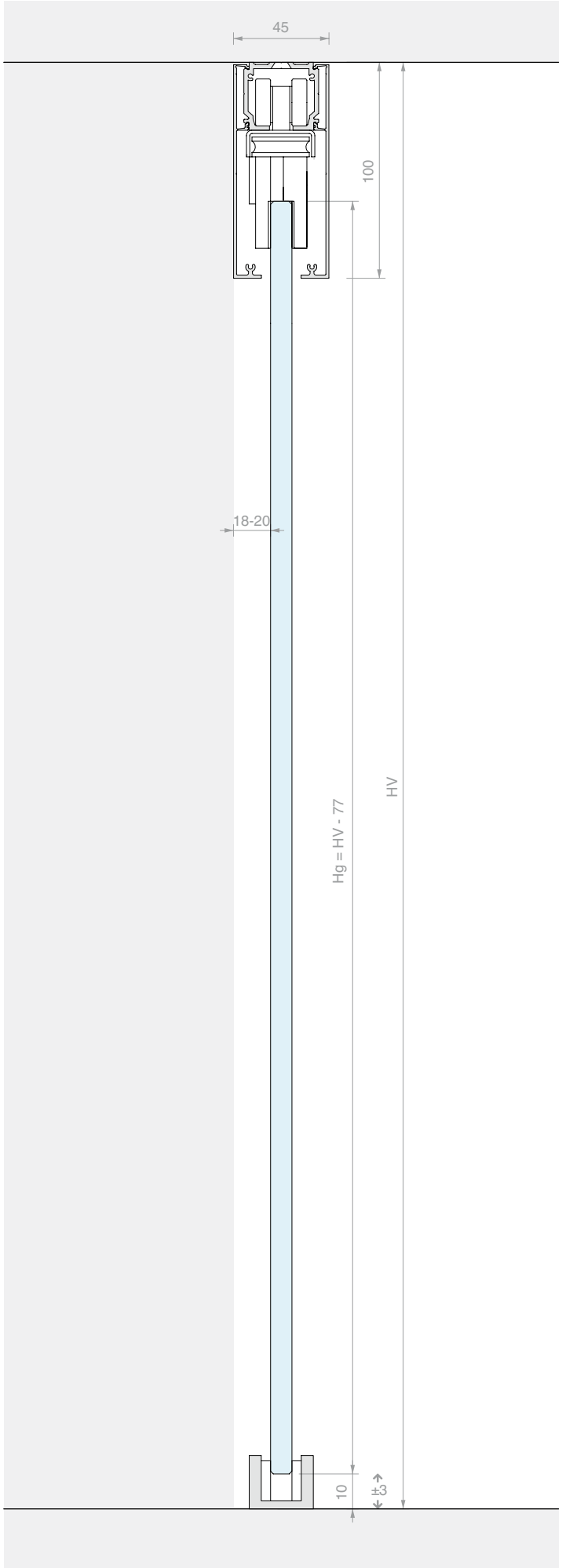
45
100
18-20
Hg = HV - 77
HV
10
±3

CEILING FIXING SLIDING DOOR KIT
SINGLE DOOR AND FIXED GLASS WITH LOW COVER

Material: Aluminium
Finish: /6 /88 /97

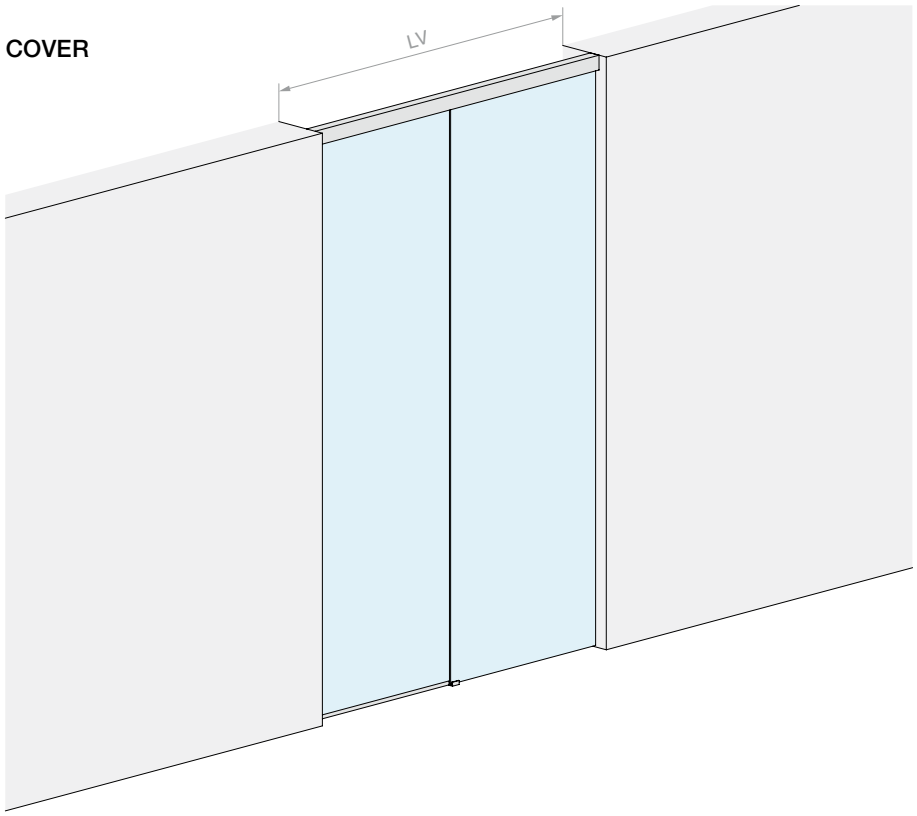

DOOR OPENING SIZE

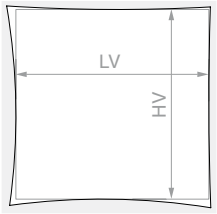

HV max: **3000** mm

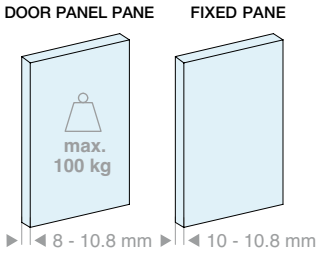

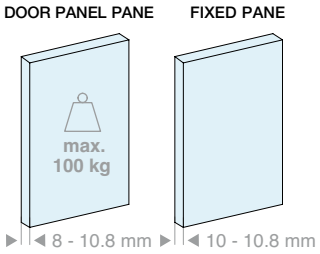

Kit comprising:

Art.	Description	Qty
LM21.200	Ceiling fixing track	1 Pc
LM26075.200	Fixed glass profile	1 Pc
LM0075C.200	Track cover	1 Pc
LMC13.100	Finishing profile	1 Pc
LMU20.150	U profile	1 Pc
LMU20.300	U profile	1 Pc
LMU20TP	Finishing cap	1 Pc
GTUP2	Glass holder gasket	5 m
CERPOS170ALL	Clamp	2 Pcs
057.3114.071	Roller with screw and nut	2 Pcs
057.3073.072	End stop with buffer	2 Pcs
LMGF	Floor guide	1 Pc
Optional		
042.3102.072	Softbreak damper, 20-60 kg	1 Pc
042.3102.071	Softbreak damper, 61-100 kg	1 Pc

Art.	LV max	Qty
LMV7511F.200	**2000** mm	1 Pc

Kit comprising:

Art.	Description	Qty
LM21.300	Ceiling fixing track	1 Pc
LM26075.300	Fixed glass profile	1 Pc
LM0075C.300	Track cover	1 Pc
LMC13.200	Finishing profile	1 Pc
LMU20.300	U profile	2 Pcs
LMU20TP	Finishing cap	1 Pc
GTUP2	Glass holder gasket	6 m
CERPOS170ALL	Clamp	2 Pcs
057.3114.071	Roller with screw and nut	2 Pcs
057.3073.072	End stop with buffer	2 Pcs
LMGF	Floor guide	1 Pc
Optional		
042.3102.072	Softbreak damper, 20-60 kg	1 Pc
042.3102.071	Softbreak damper, 61-100 kg	1 Pc

Art.	LV max	Qty
LMV7511F.300	**3000** mm	1 Pc

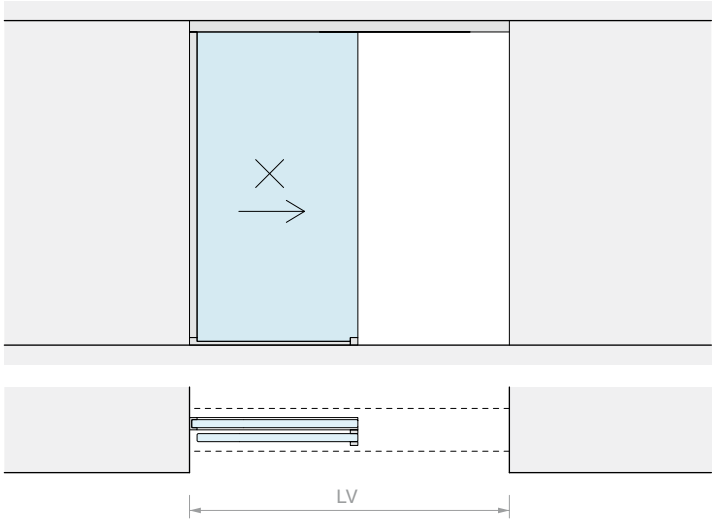

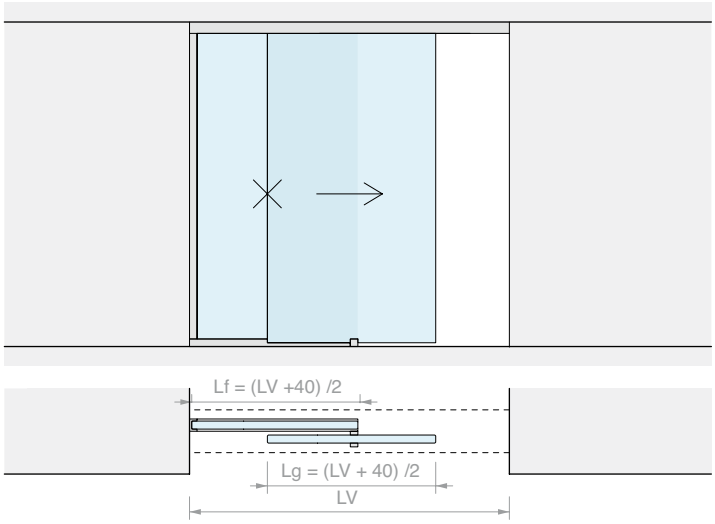

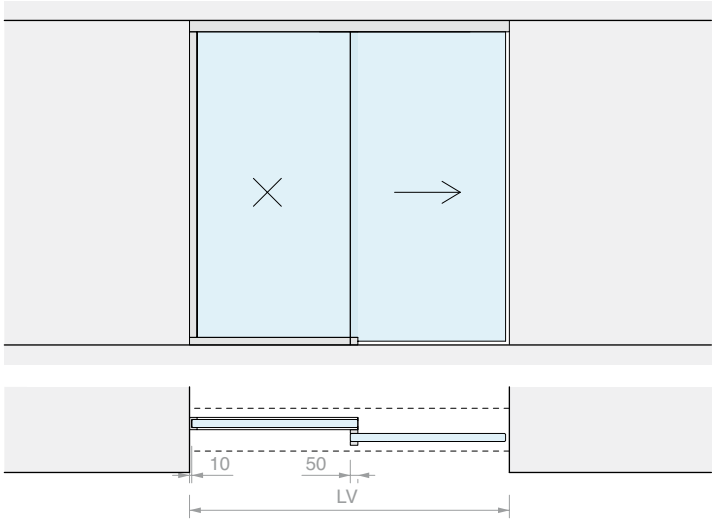

MACHINING OF GLASS FOR CERPOS170

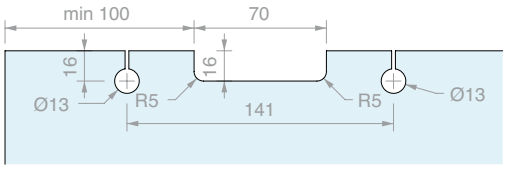

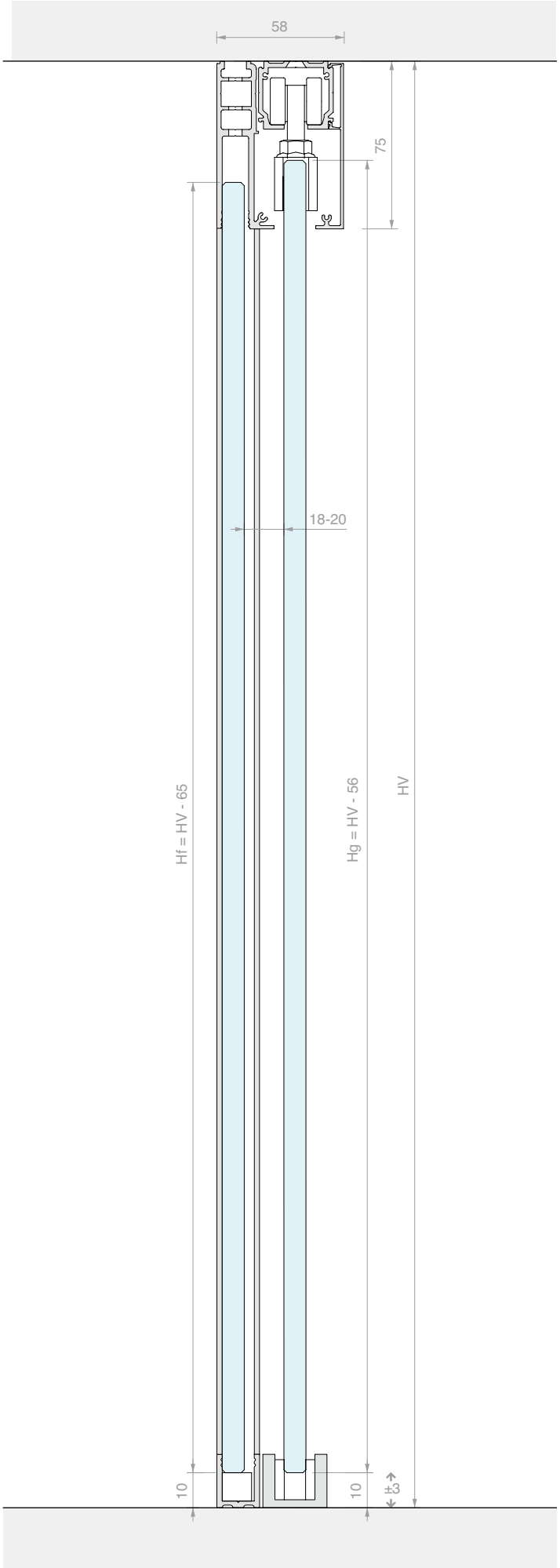

SLIDING DOOR KIT, CEILING FIXING
SINGLE DOOR AND FIXED GLASS WITH HIGH COVER

Material: Aluminium
Finish: /6 /88 /97

WITHOUT HOLES IN THE GLASS

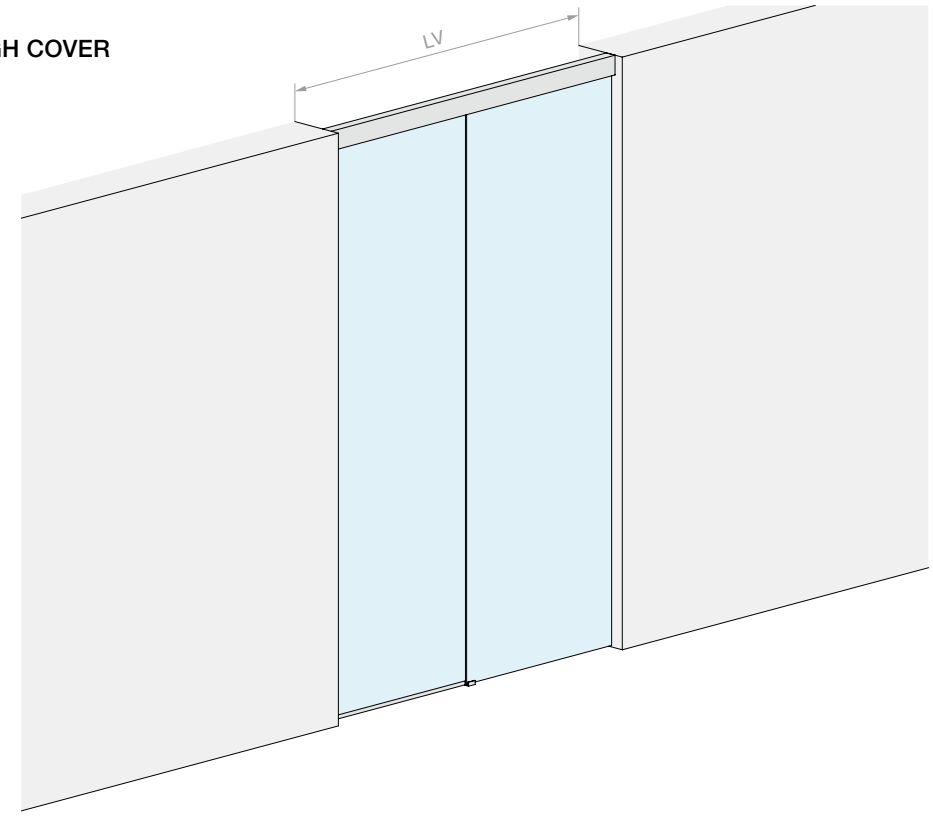

DOOR OPENING SIZE

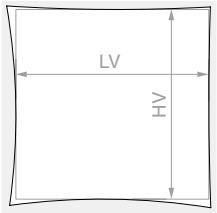

HV max: **3000** mm

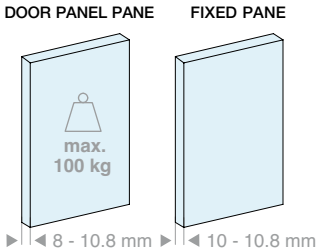

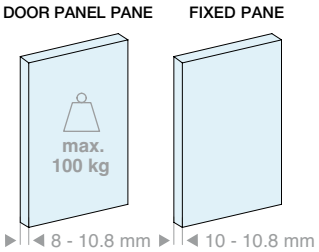

Kit comprising:

Art.	Description	Qty
LM21.200	Ceiling fixing track	1 Pc
LM26100.200	Fixed glass profile	1 Pc
LM0100C.200	Track cover	1 Pc
LMC13.100	Finishing profile	1 Pc
LMU20.150	U profile	1 Pc
LMU20.300	U profile	1 Pc
LMU20TP	Finishing cap	1 Pc
GTUP2	Glass holder gasket	5 m
CERPOS514	Clamp	2 Pcs
CARVIT8X40-A2	Roller with screw and nut	2 Pcs
057.3073.072	End stop with buffer	2 Pcs
LMGF	Floor guide	1 Pc

Optional

042.3102.072	Softbreak damper, 20-60 kg	1 Pc
042.3102.071	Softbreak damper, 61-100 kg	1 Pc

Art.	LV max	Qty
LMV10011F.200	**2000** mm	1 Pc

Kit comprising:

Art.	Description	Qty
LM21.300	Ceiling fixing track	1 Pc
LM26100.300	Fixed glass profile	1 Pc
LM0100C.300	Track cover	1 Pc
LMC13.200	Finishing profile	1 Pc
LMU20.300	U profile	2 Pcs
LMU20TP	Finishing cap	1 Pc
GTUP2	Glass holder gasket	6 m
CERPOS514	Clamp	2 Pcs
CARVIT8X40-A2	Roller with screw and nut	2 Pcs
057.3073.072	End stop with buffer	2 Pcs
LMGF	Floor guide	1 Pc

Optional

042.3102.072	Softbreak damper, 20-60 kg	1 Pc
042.3102.071	Softbreak damper, 61-100 kg	1 Pc

Art.	LV max	Qty
LMV10011F.300	**3000** mm	1 Pc

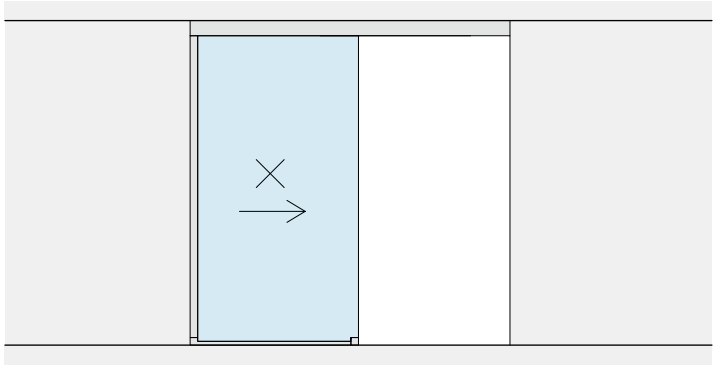
LV

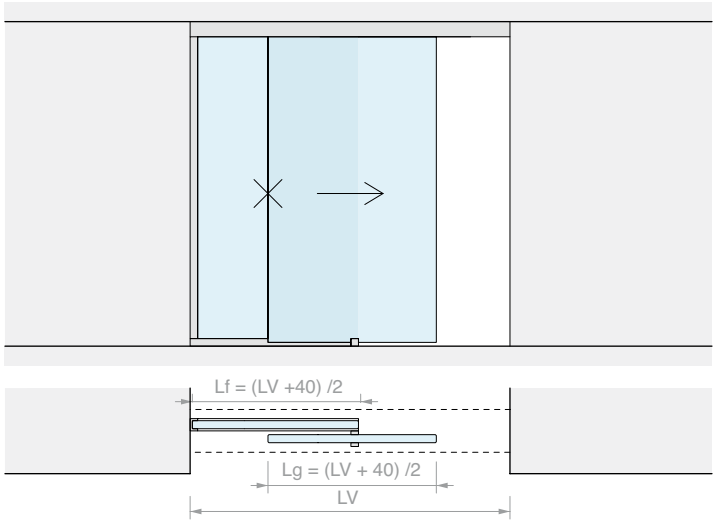
Lf = (LV +40) /2
Lg = (LV + 40) /2
LV

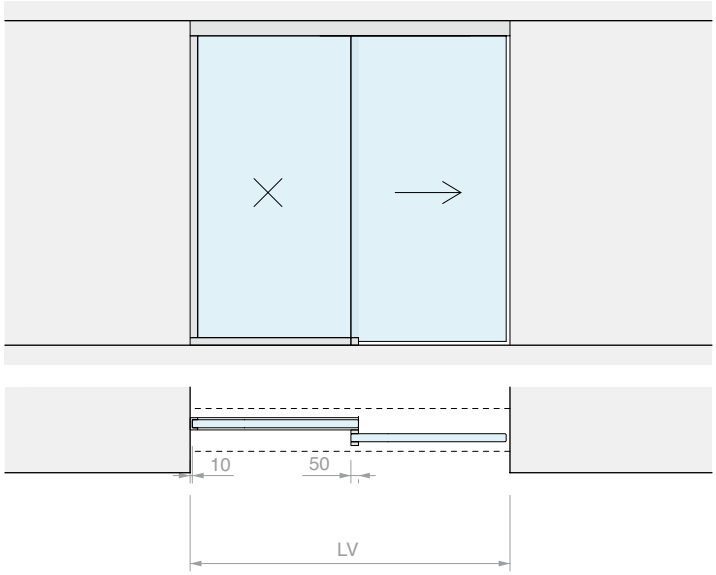
10
50
LV

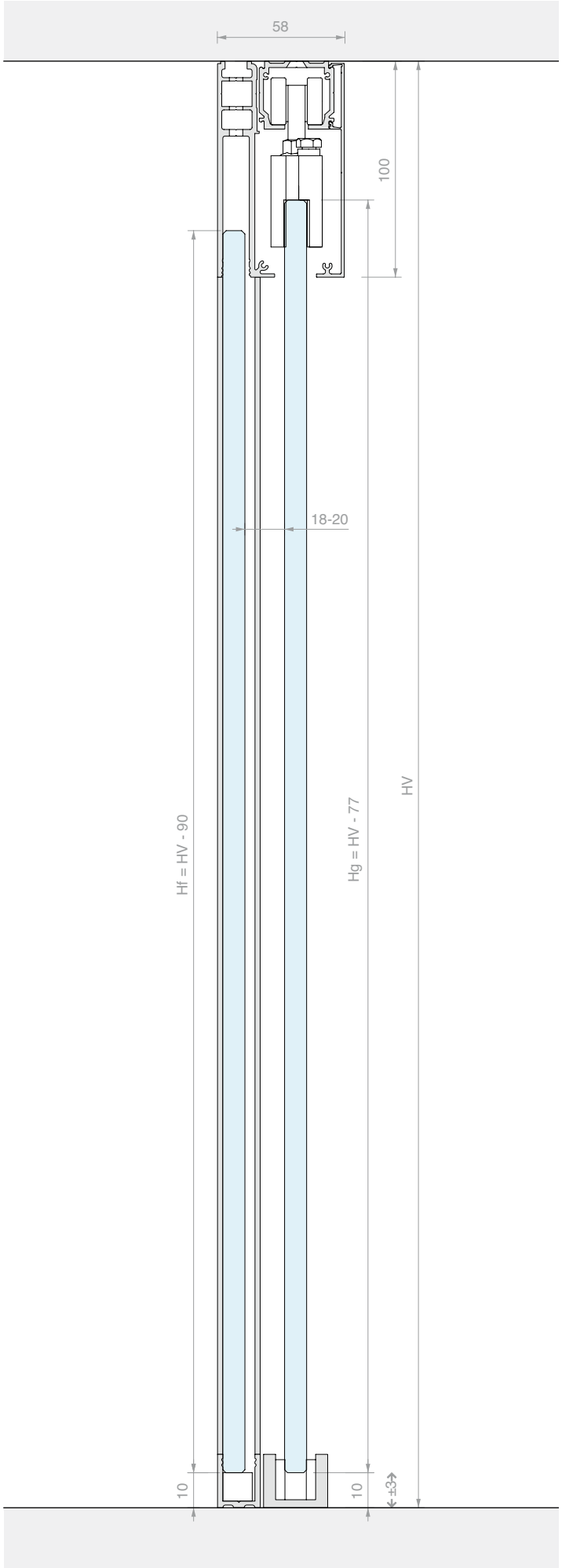
58
100
18-20
Hf = HV - 90
Hg = HV - 77
HV
10
10
±3

CEILING FIXING SLIDING DOOR KIT
SYNCHRONISED DOUBLE DOOR AND DOUBLE FIXED GLASS

Material: Aluminium

Finish: /6 /88 /97

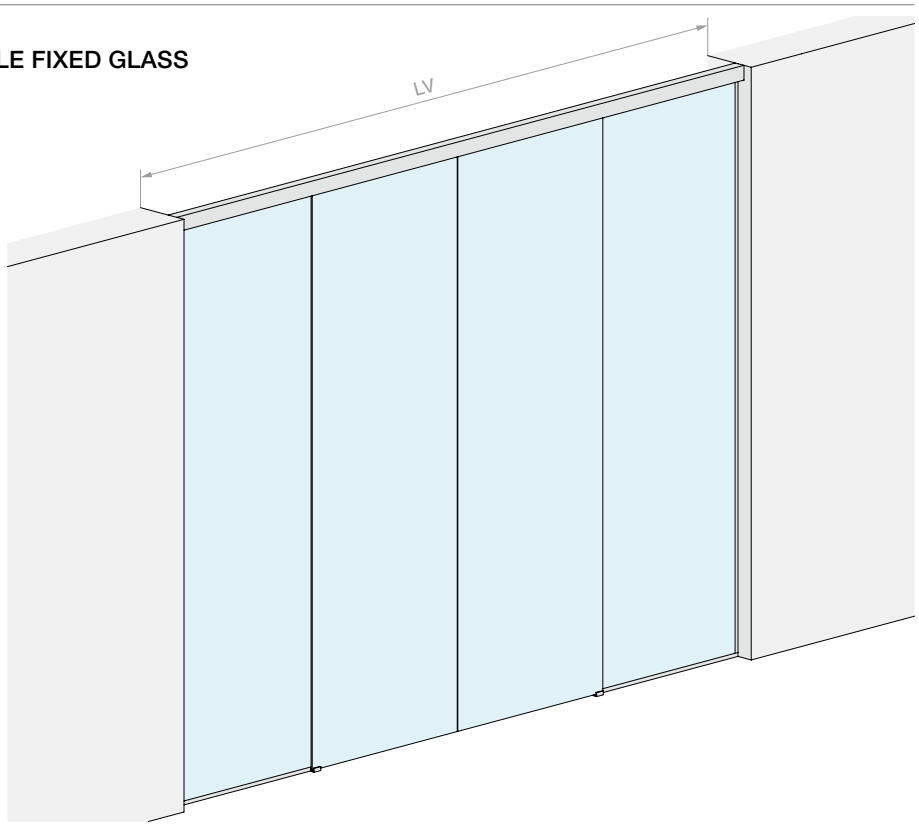

DOOR OPENING SIZE

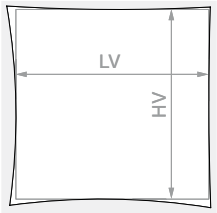

HV max: **3000** mm

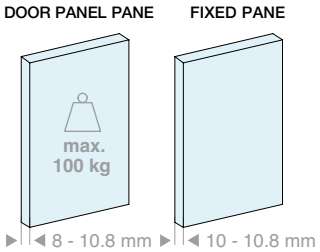

Kit comprising:

Art.	Description	Qty
LM21.400	Ceiling fixing track	1 Pc
LM26075.400	Fixed glass profile	1 Pc
LM0075C.400	Track cover	1 Pc
LMC13.200	Finishing profile	1 Pc
LMU20.300	U profile	3 Pcs
LMU20TP	Finishing cap	2 Pcs
GTUP2	Glass holder gasket	10 m
CERPOS170ALL	Clamp	2 Pcs
CERPOS170SYNC	Clamp for synchronisation	2 Pcs
057.3114.071	Roller with screw and nut	4 Pcs
057.3073.071	End stop without buffer	4 Pcs
LMGF	Floor guide	2 Pcs
LMSIN-2AC170	Synchronisation kit	1 Pc

Optional

042.3102.072	Softbreak damper, 20-60 kg	2 Pcs
042.3102.071	Softbreak damper, 61-100 kg	2 Pcs

Art.	LV max	Qty
LMV7511CF.400	**4000** mm	1 Pc

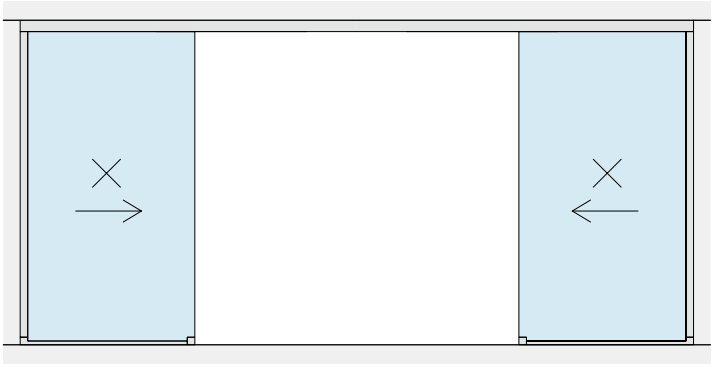

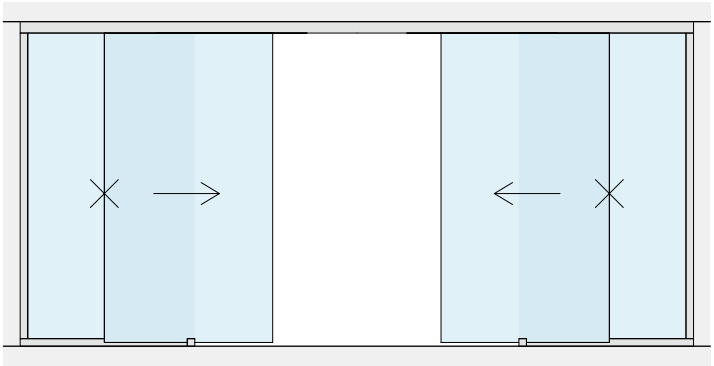

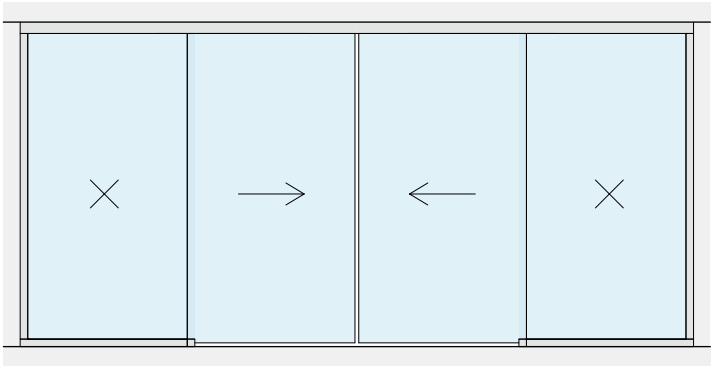

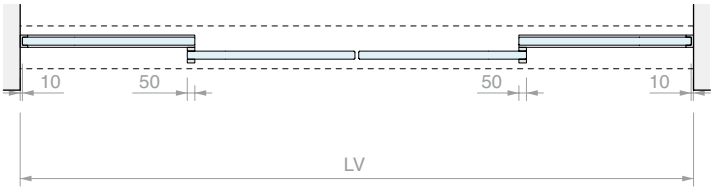

MACHINING OF GLASS FOR CERPOS170

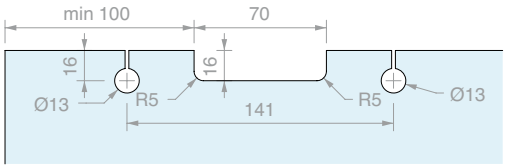

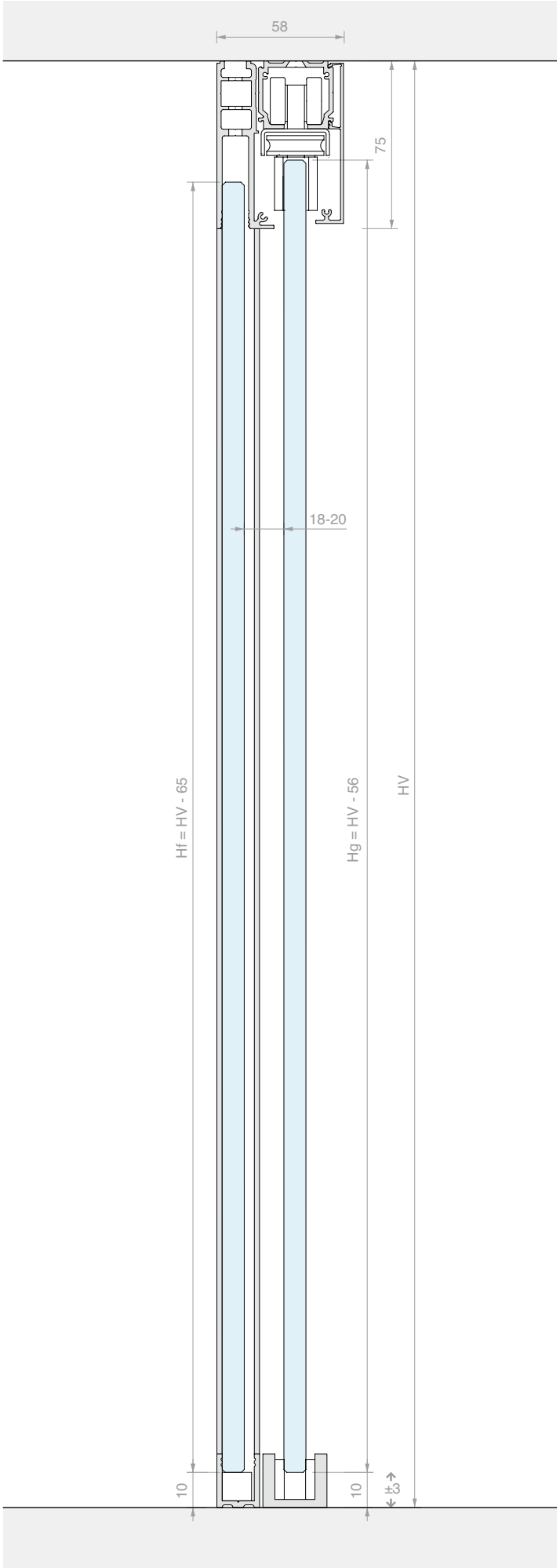

SLIDING DOOR KIT, CEILING FIXING
SYNCHRONISED DOUBLE DOOR AND DOUBLE FIXED GLASS WITH HIGH COVER

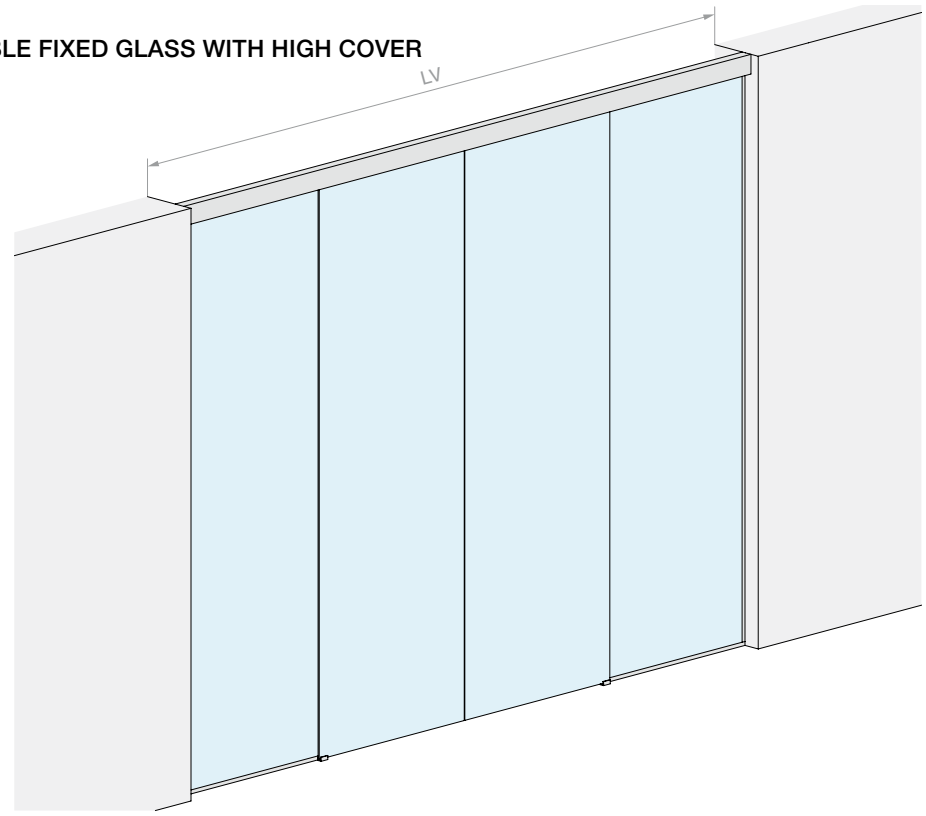

Material: Aluminium
Finish: /6 /88 /97

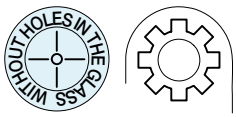

DOOR OPENING SIZE

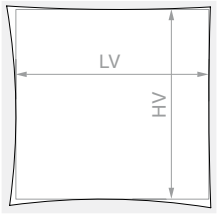

HV max: **3000** mm

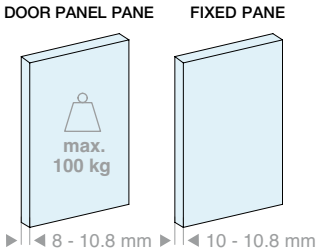

Kit comprising:

Art.	Description	Qty
LM21.400	Ceiling fixing track	1 Pc
LM26100.400	Fixed glass profile	1 Pc
LM0100C.400	Track cover	1 Pc
LMC13.200	Finishing profile	1 Pc
LMU20.300	U profile	3 Pcs
LMU20TP	Finishing cap	2 Pcs
GTUP2	Glass holder gasket	10 m
CERPOS514	Clamp	2 Pcs
CERPOS514-C	Clamp for synchronisation	2 Pcs
CARVIT8X40-A2	Roller with screw and nut	4 Pcs
057.3073.071	End stop without buffer	4 Pcs
LMGF	Floor guide	2 Pcs
LMSIN-2AC500	Synchronisation kit	1 Pc

Optional

042.3102.072	Softbreak damper, 20-60 kg	2 Pcs
042.3102.071	Softbreak damper, 61-100 kg	2 Pcs

Art.	LV max	Qty
LMV10011CF.400	**4000** mm	1 Pc

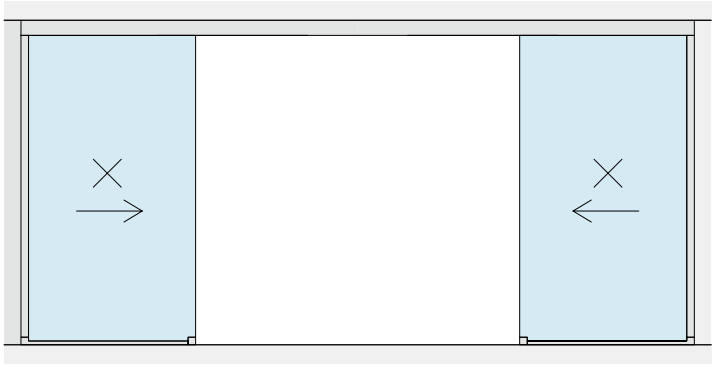

LV

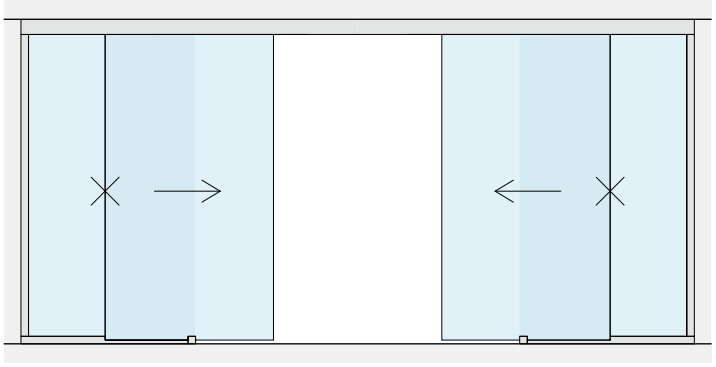

Lf = (LV +80) /4
Lg = (LV + 80) /4
LV

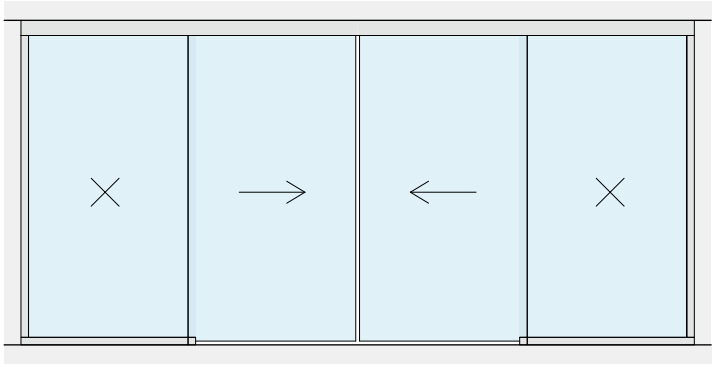

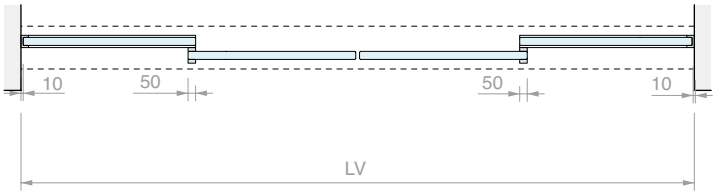
10
50
50
10
LV

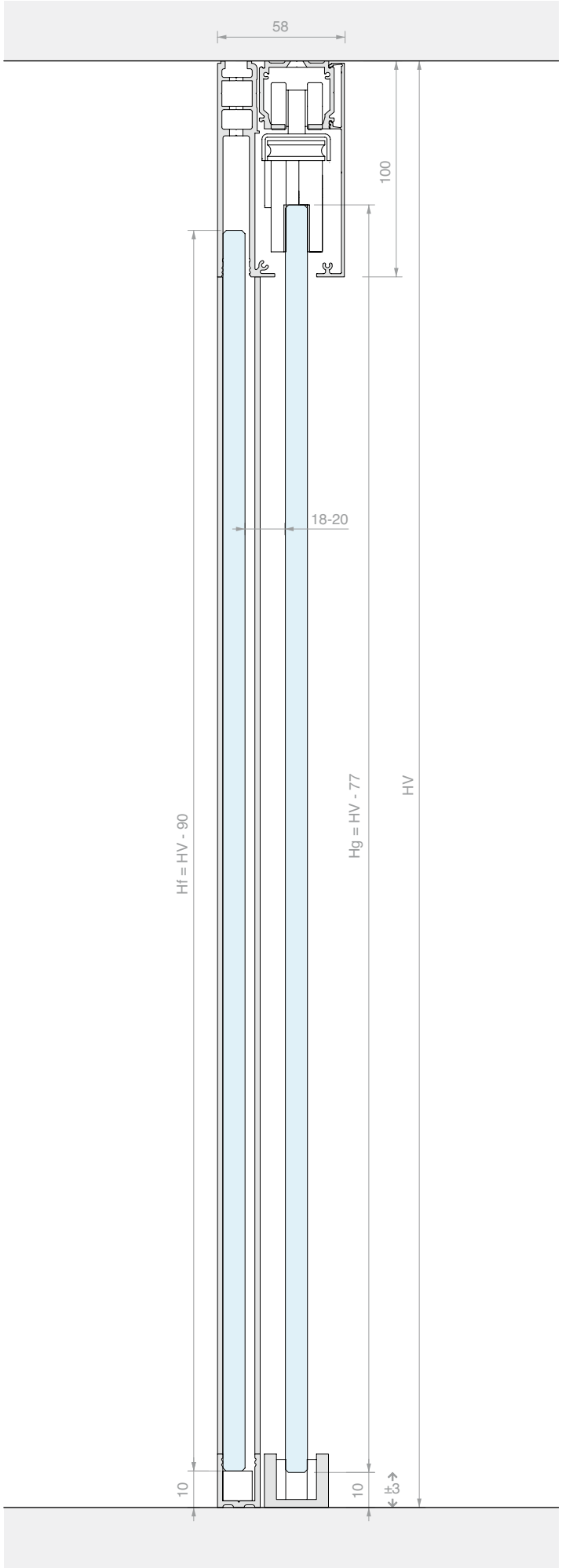
58
100
18-20
Hf = HV - 90
Hg = HV - 77
HV
10
10
±3

SLIDING DOOR KIT, CEILING FIXING
DOUBLE DOOR WITH DRAGGING SYSTEM

Material: Aluminium
Finish: /6 /88 /97

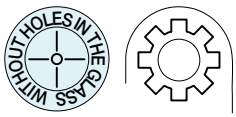

DOOR OPENING SIZE

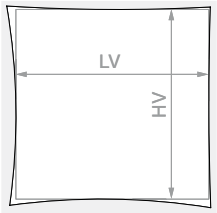

HV max: **3000** mm

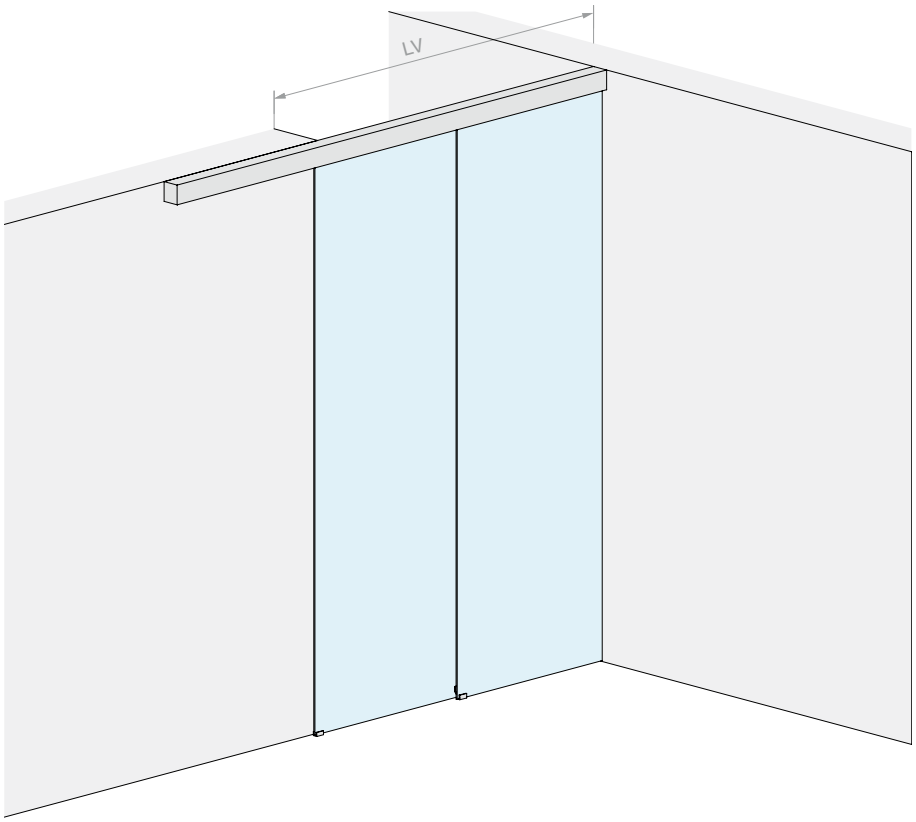

DOOR PANEL PANE

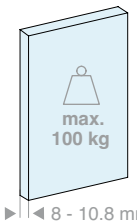

8 - 10.8 mm

Kit comprising:

Art.	Description	Qty
LM2V080.300	2-way ceiling fixing track	1 Pc
LM0100C.300	Track cover	2 Pcs
LM10090TP33	Finishing cap	2 Pcs
CERPOS514	Clamp	1 Pc
CERPOS514-C	Clamp for synchronisation	2 Pcs
CERPOS514-T	Clamp for lead & follower	1 Pc
CARVIT8X50-A2	Roller with screw and nut	4 Pcs
057.3073.072	End stop with buffer	2 Pcs
057.3073.071	End stop without buffer	2 Pcs
LMSIN-2AT502	Synchronisation kit	1 Pc

Optional

042.3102.071	Softbreak damper, for panels from 40 to 65 kg	1 or 2 Pcs

Art.	LV max	Qty
LMV10012.300	**1965** mm	1 Pc

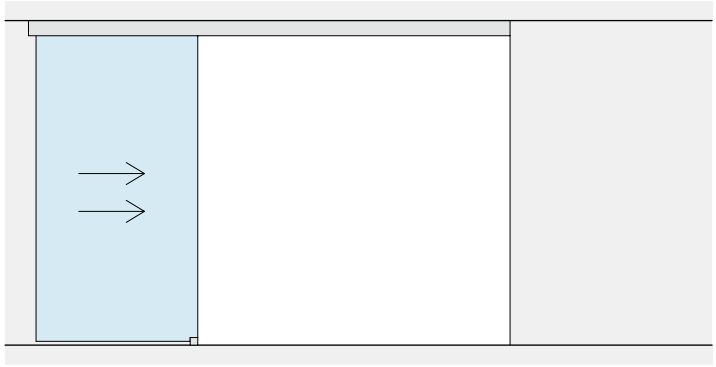

LV

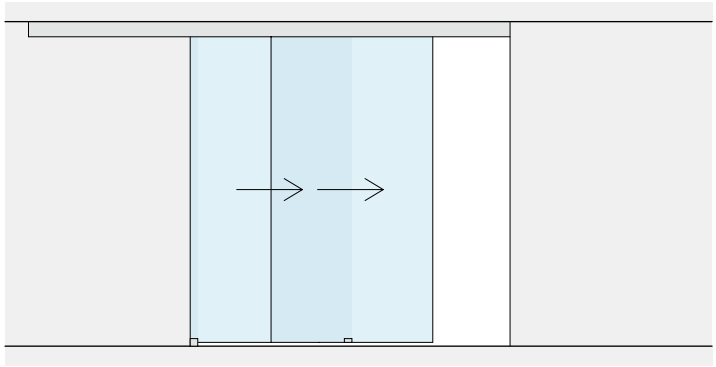

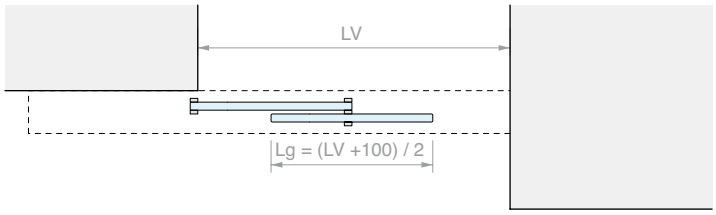
LV
Lg = (LV +100) / 2

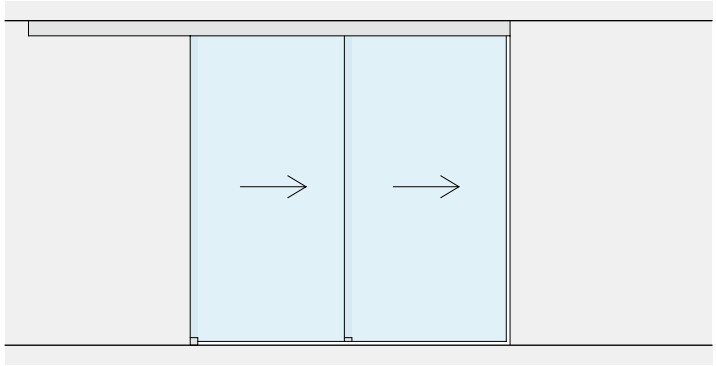

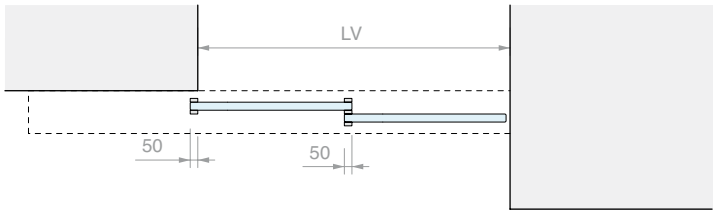
LV
50
50

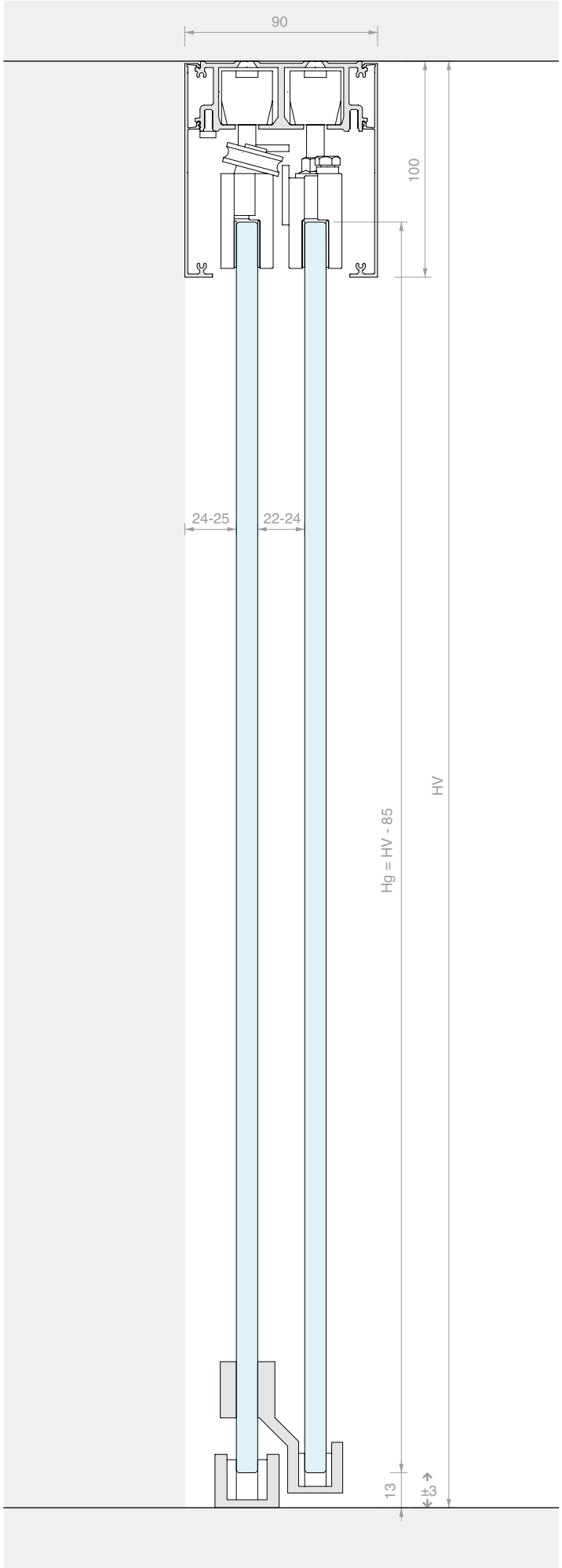
90
100
24-25
22-24
Hg = HV - 85
HV
13
±3

SLIDING DOOR KIT, CEILING FIXING
DOUBLE DRAGGING DOOR AND FIXED GLASS

Material: Aluminium
Finish: /6 /88 /97

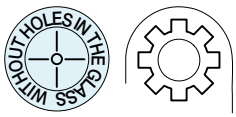

DOOR OPENING SIZE

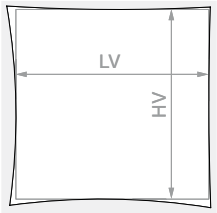

HV max: **3000** mm

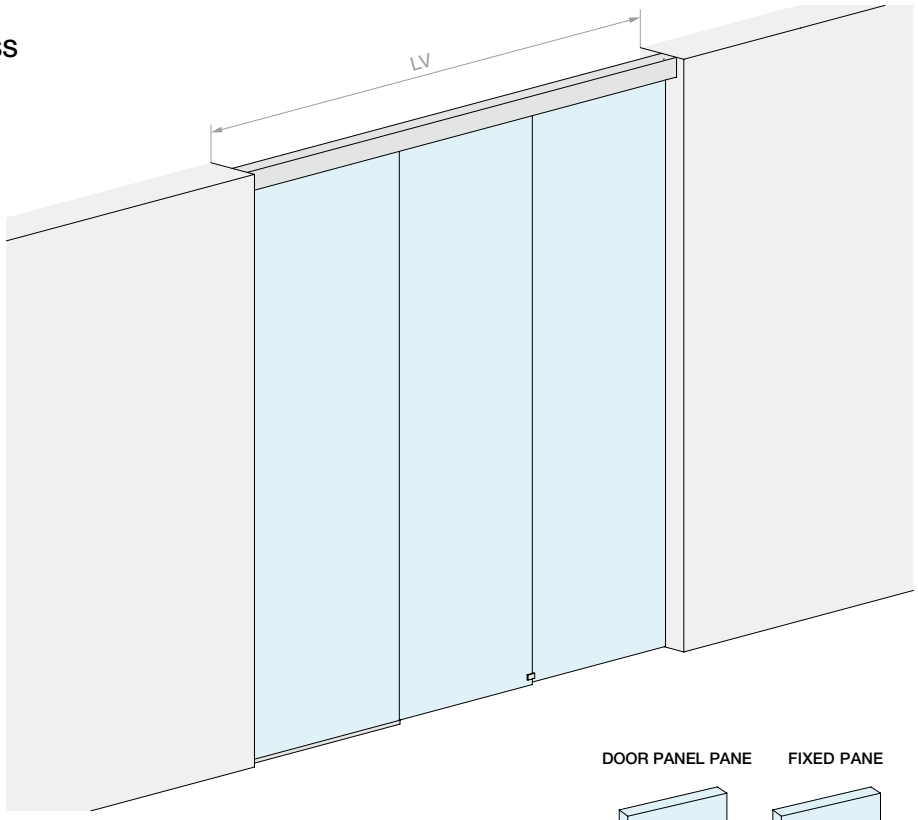

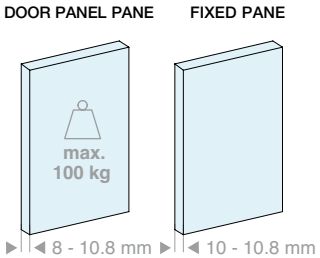

Kit comprising:

Art.	Description	Qty
LM2V080.300	2-way ceiling fixing track	1 Pc
LM26100.300	Fixed glass profile	1 Pc
LM0100C.300	Track cover	1 Pc
LMC13.200	Finishing profile	1 Pc
LMU20.150	U profile	1 Pc
LMU20.300	U profile	1 Pc
LMU20TP	Finishing cap	1 Pc
GTUP2	Glass holder gasket	5 m
CERPOS514	Clamp	1 Pc
CERPOS514-C	Clamp for synchronisation	2 Pcs
CERPOS514-T	Clamp for lead & follower	1 Pc
CARVIT8X50-A2	Roller with screw and nut	4 Pcs
057.3073.072	End stop with buffer	2 Pcs
057.3073.071	End stop without buffer	2 Pcs
LMSIN-2AT502	Synchronisation kit	1 Pc

Optional

042.3102.071	Softbreak damper, for panels from 40 to 65 kg	1 or 2 Pcs

Art.	LV max	Qty
LMV10012F.300	**3000** mm	1 Pcs

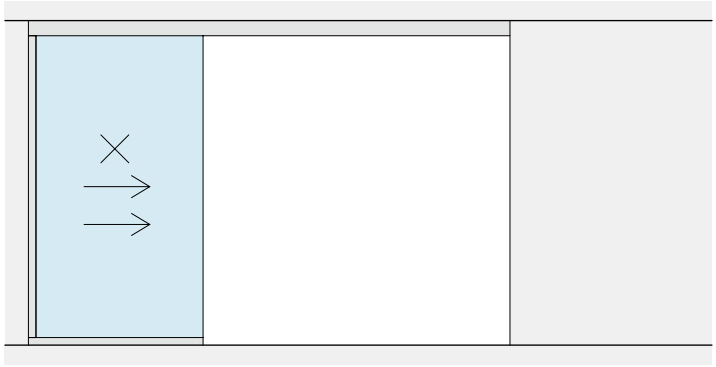

LP
LV

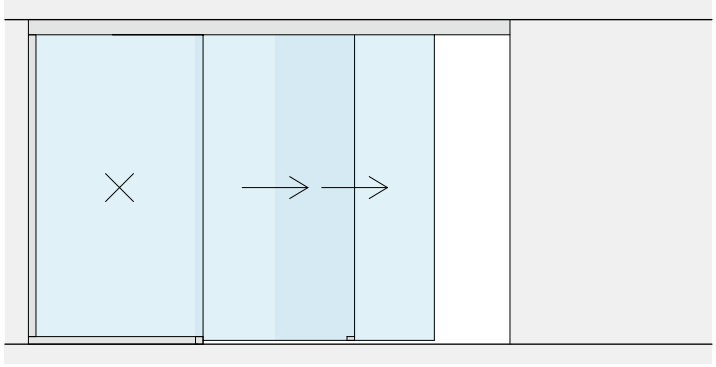

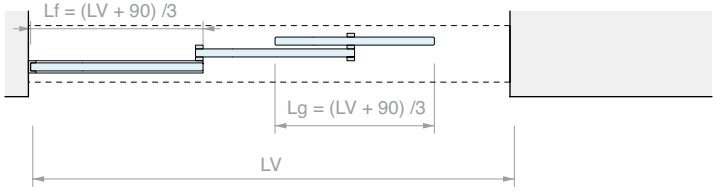
Lf = (LV + 90) /3
Lg = (LV + 90) /3
LV

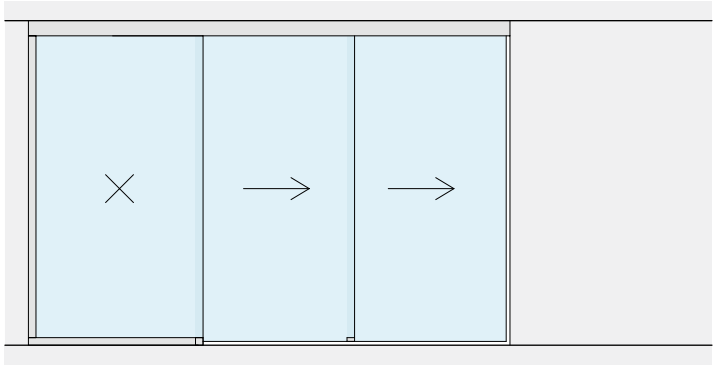

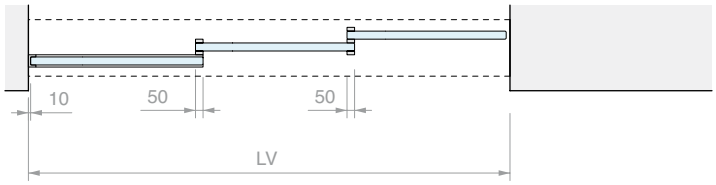
10
50
50
LV

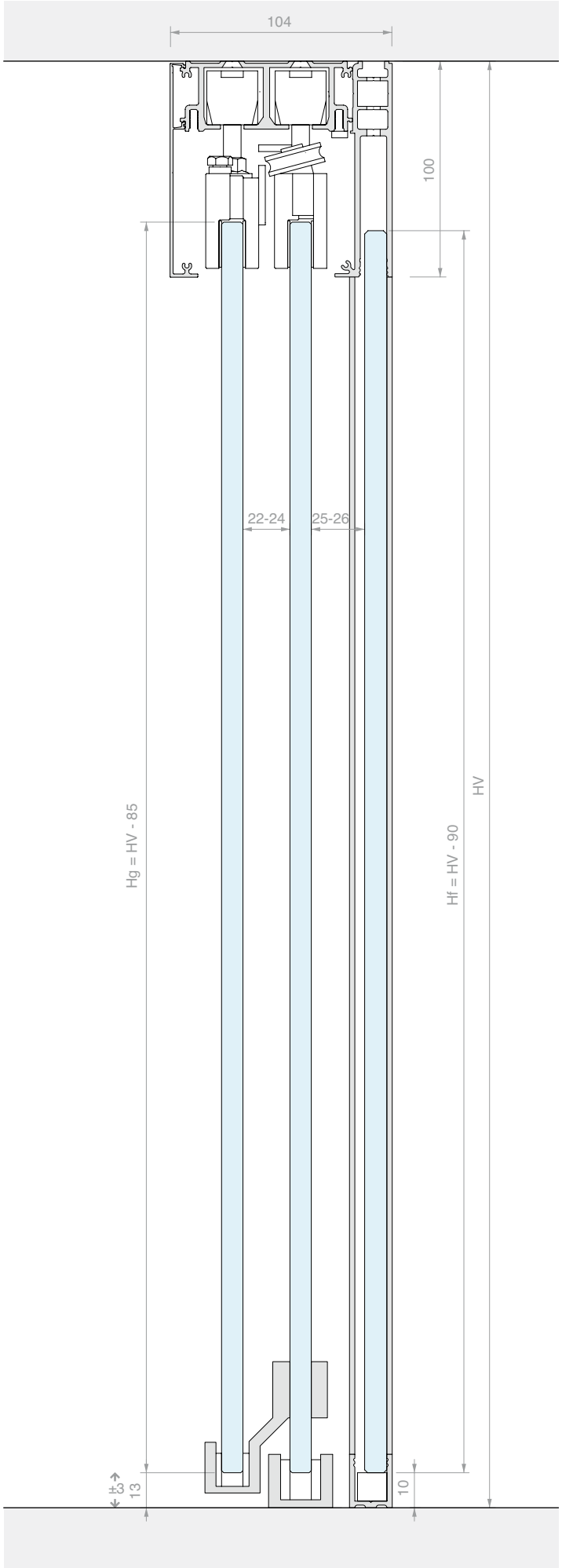
104
100
22-24
25-26
Hg = HV - 85
Hf = HV - 90
HV
±3
13
10

SLIDING DOOR KIT, CEILING FIXING
TRIPLE DOOR WITH DRAGGING SYSTEM

Material: Aluminium
Finish: /6 /88 /97

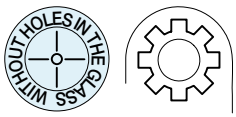

DOOR OPENING SIZE

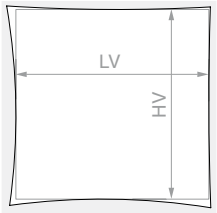

HV max: **3000** mm

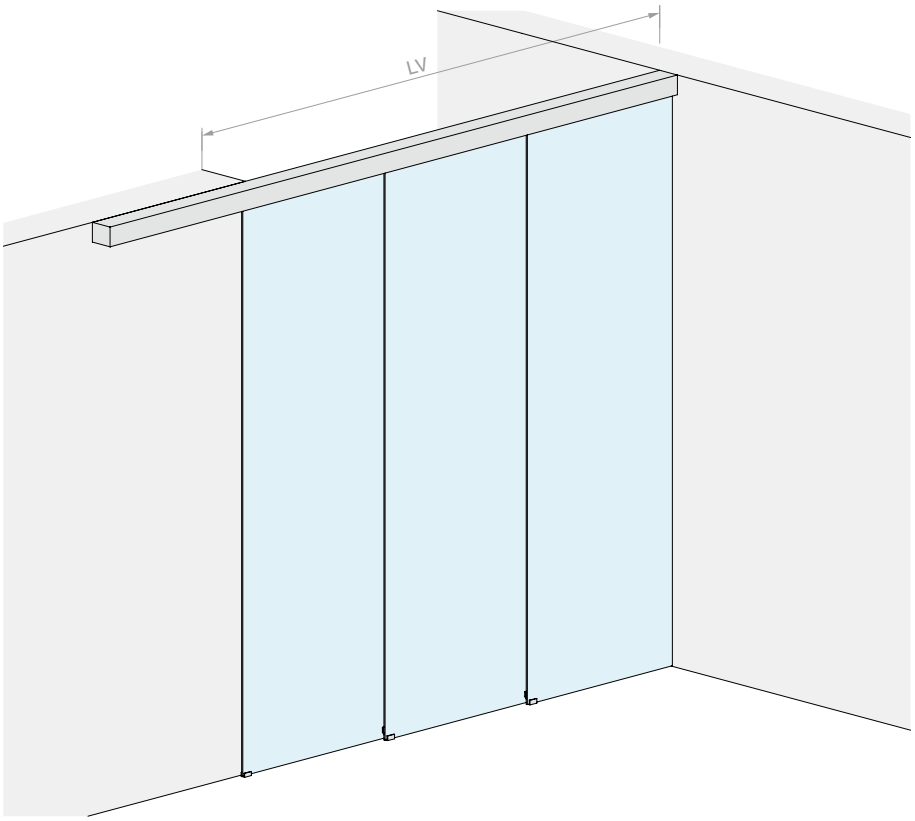

DOOR PANEL PANE

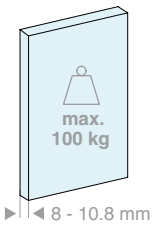

Kit comprising:

Art.	Description	Qty
LM3V112.400	3-way ceiling fixing track	1 Pc
LM0100C.400	Track cover	2 Pcs
LM10022TP33	Finishing cap	2 Pcs
CERPOS514	Clamp	1 Pc
CERPOS514-C	Clamp for synchronisation	3 Pcs
CERPOS514-T	Clamp for lead & follower	2 Pcs
CARVIT8X50-A2	Roller with screw and nut	6 Pcs
057.3073.072	End stop with buffer	2 Pcs
057.3073.071	End stop without buffer	4 Pcs
LMSIN-3AT503	Synchronisation kit	1 Pc

Optional

042.3102.071	Softbreak damper, for panels from 30 to 55 kg	1 or 2 Pcs

Art.	LV max	Qty
LMV10013.400	**2955** mm	1 Pc

LV

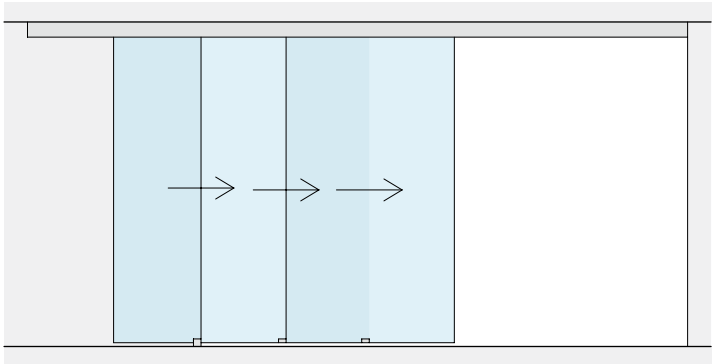

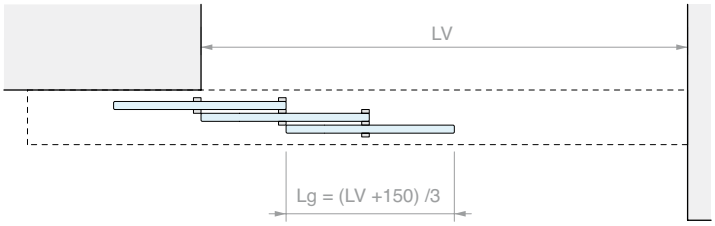
LV
Lg = (LV +150) /3

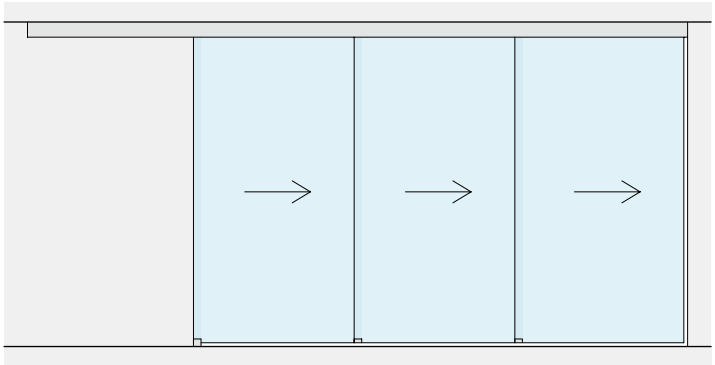

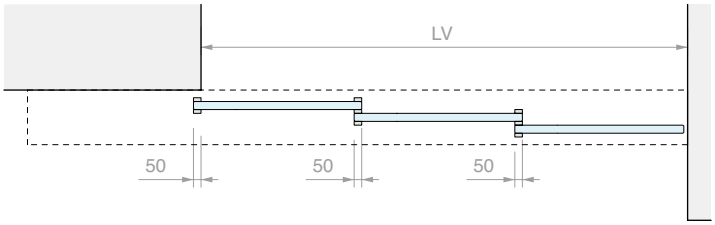
LV
50
50
50

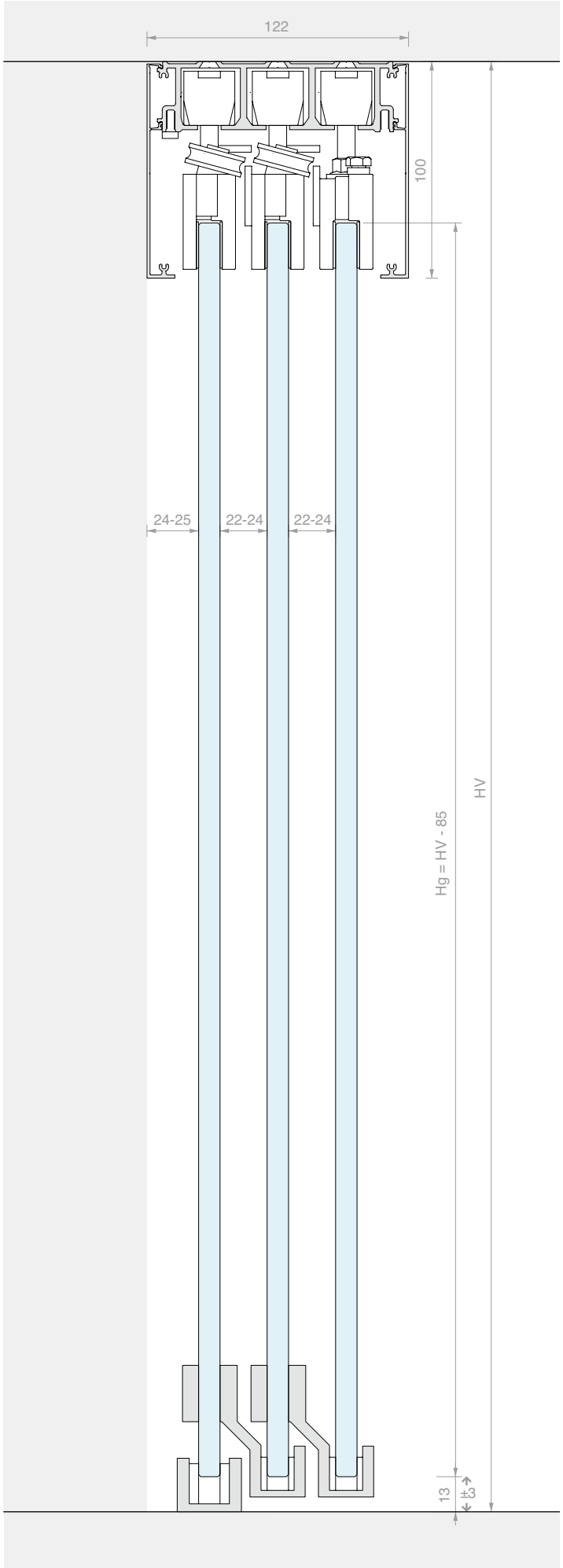
122
100
24-25
22-24
22-24
HV
Hg = HV - 85
13
±3

SLIDING DOOR KIT, CEILING FIXING
TRIPLE DRAGGING DOOR AND FIXED GLASS

Material: Aluminium
Finish: /6 /88 /97

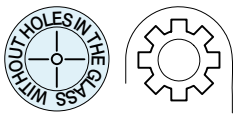

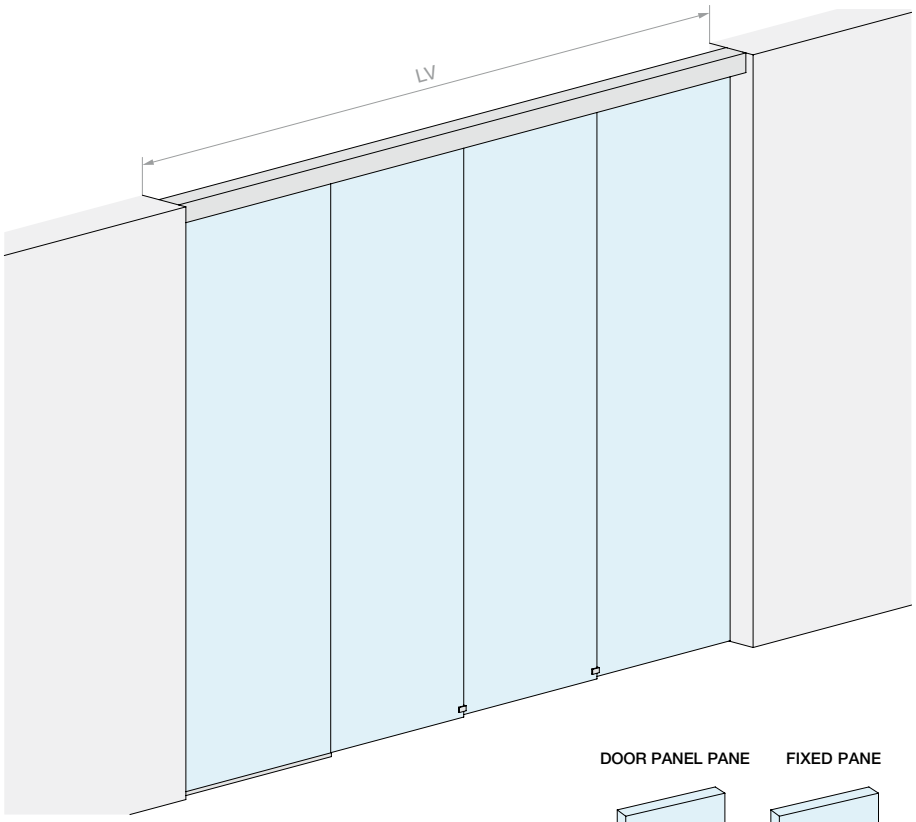

DOOR OPENING SIZE

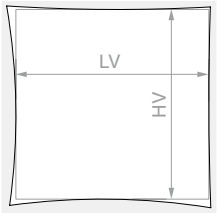

HV max: **3000** mm

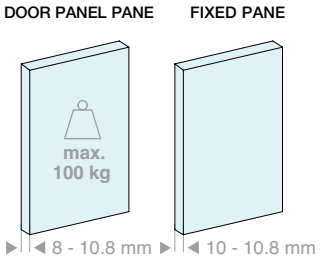

Kit comprising:

Art.	Description	Qty
LM3V112.400	3-way ceiling fixing track	1 Pc
LM26100.400	Fixed glass profile	1 Pc
LM0100C.400	Track cover	1 Pc
LMC13.300	Finishing profile	1 Pc
LMU20.150	U profile	1 Pc
LMU20.300	U profile	1 Pc
LMU20TP	Finishing cap	1 Pc
GTUP2	Glass holder gasket	5 m
CERPOS514	Clamp	1 Pc
CERPOS514-C	Clamp for synchronisation	3 Pcs
CERPOS514-T	Clamp for lead & follower	2 Pcs
CARVIT8X50-A2	Roller with screw and nut	6 Pcs
057.3073.072	End stop with buffer	2 Pcs
057.3073.071	End stop without buffer	4 Pcs
LMSIN-3AT503	Synchronisation kit	1 Pc

Optional

042.3102.071	Softbreak damper, for panels from 40 to 65 kg	1 or 2 Pcs

Art.	LV max	Qty
LMV10013F.400	**4000** mm	1 Pc

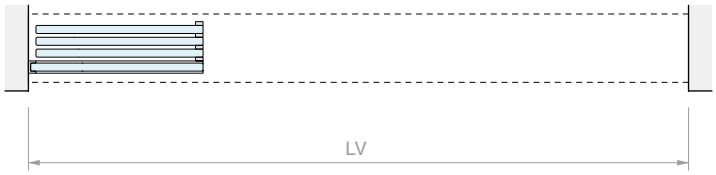
LV

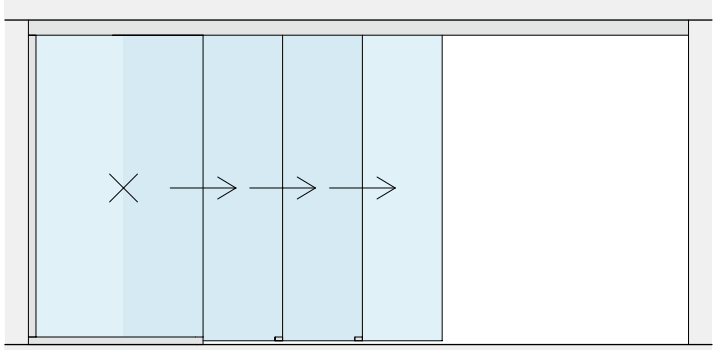

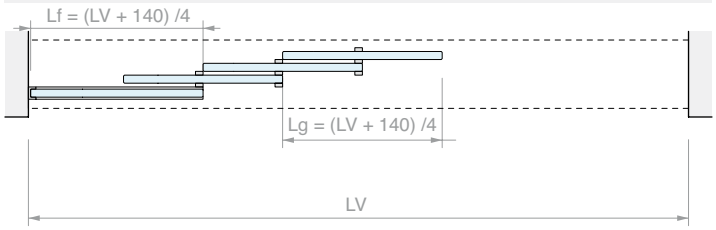
Lf = (LV + 140) /4
Lg = (LV + 140) /4
LV

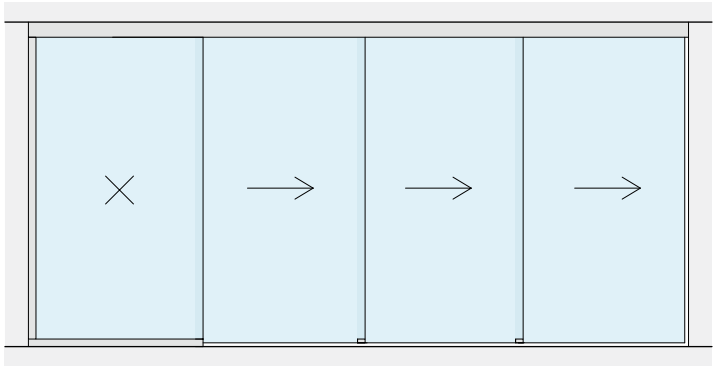

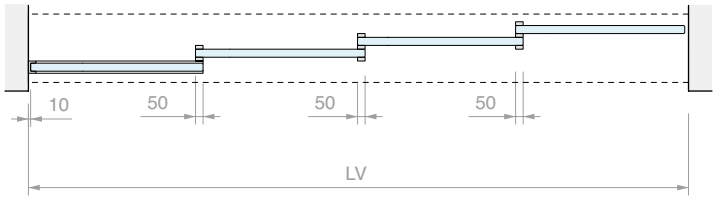
10
50
50
50
LV

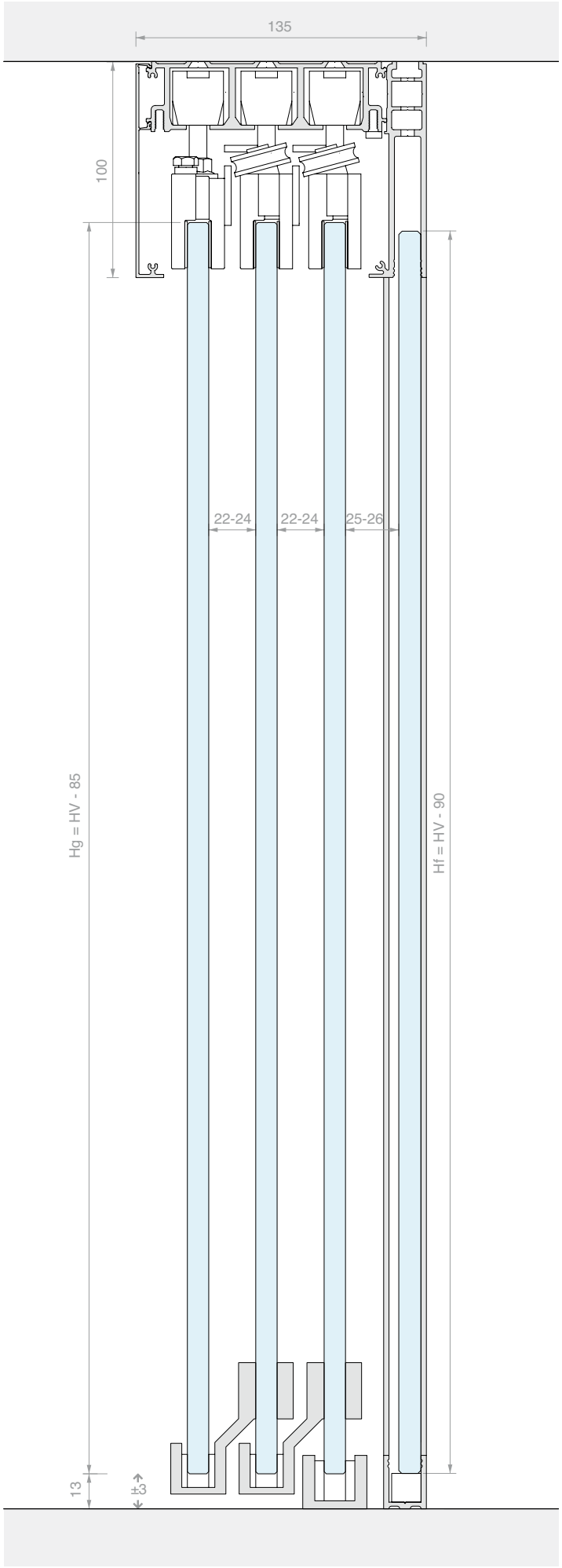
135
100
22-24
22-24
25-26
Hg = HV - 85
Hf = HV - 90
13
±3

WHITE

WALL FIXING SLIDING DOOR KIT
SINGLE DOOR WITH VISIBLE CLAMPS

Material: Aluminium
Finish: /6 /88 /97

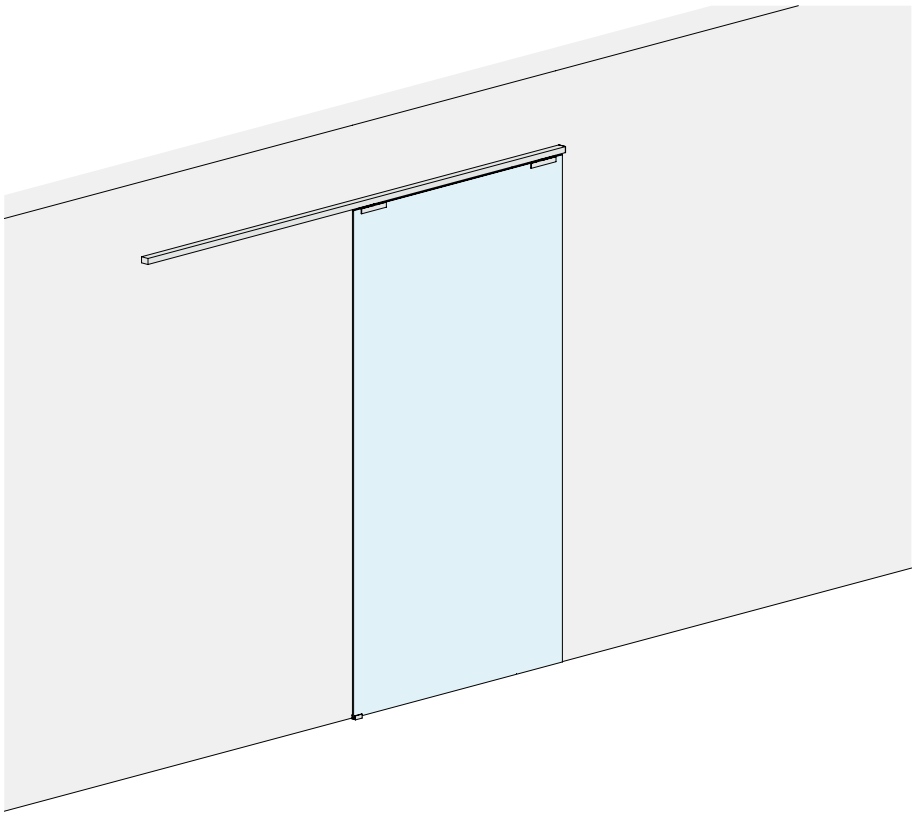

DOOR OPENING SIZE

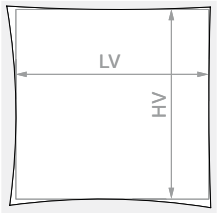

HV max: **3000** mm

DOOR PANEL PANE

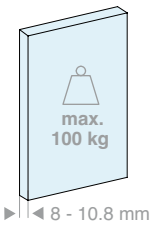

DOOR PANEL PANE

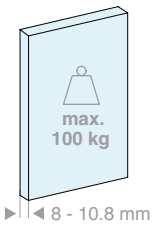

Kit comprising:

Art.	Description	Qty
LM3110.200	Wall fixing track	1 Pc
LM3120.200	Track cover	1 Pc
LM31042TP32	Finishing cap	2 Pcs
CERPOS170COV	Clamp	2 Pcs
057.3114.071	Roller with screw and nut	2 Pcs
057.3073.072	End stop with buffer	2 Pcs
LMGF	Floor guide	1 Pc
Optional		
042.3102.072	Softbreak damper, 20-60 kg	1 Pc
042.3102.071	Softbreak damper, 61-100 kg	1 Pc

Kit comprising:

Art.	Description	Qty
LM3110.300	Wall fixing track	1 Pc
LM3120.300	Track cover	1 Pc
LM31042TP32	Finishing cap	2 Pcs
CERPOS170COV	Clamp	2 Pcs
057.3114.071	Roller with screw and nut	2 Pcs
057.3073.072	End stop with buffer	2 Pcs
LMGF	Floor guide	1 Pc
Optional		
042.3102.072	Softbreak damper, 20-60 kg	1 Pc
042.3102.071	Softbreak damper, 61-100 kg	1 Pc

Art.	LV max	Qty
LMV3121.200	**920** mm	1 Pc

Art.	LV max	Qty
LMV3121.300	**1420** mm	1 Pc

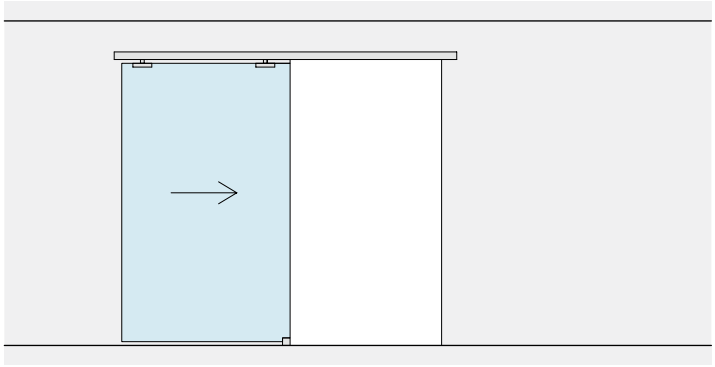

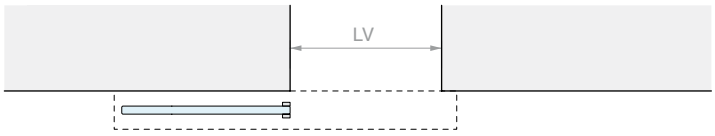

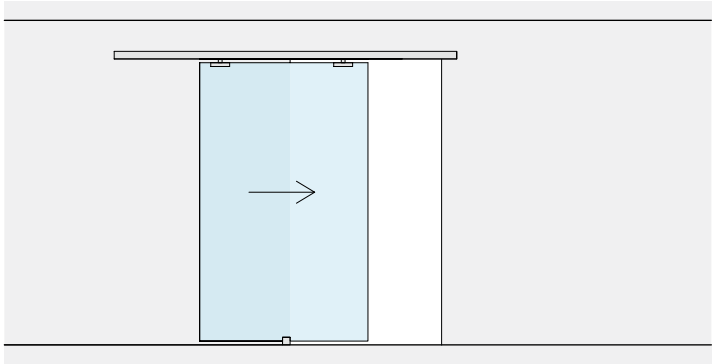

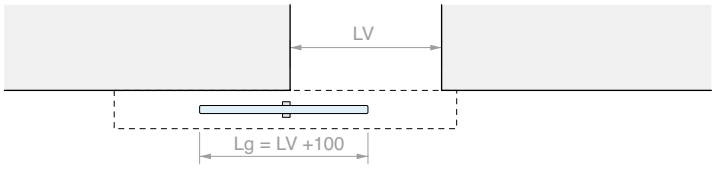

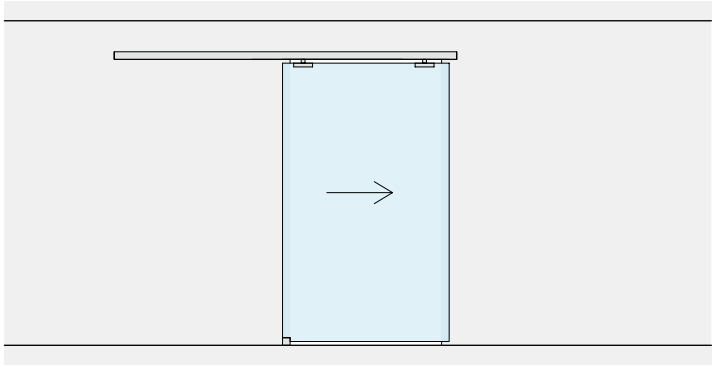

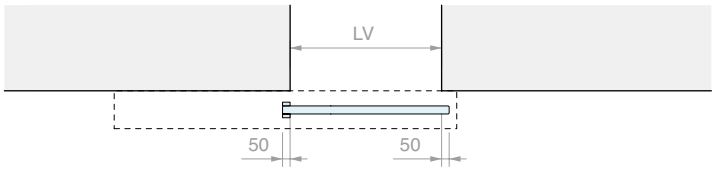

MACHINING OF GLASS FOR CERPOS170

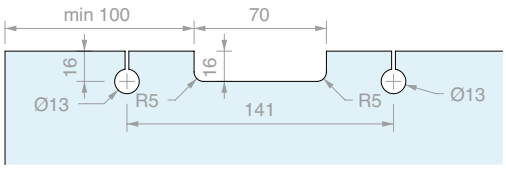

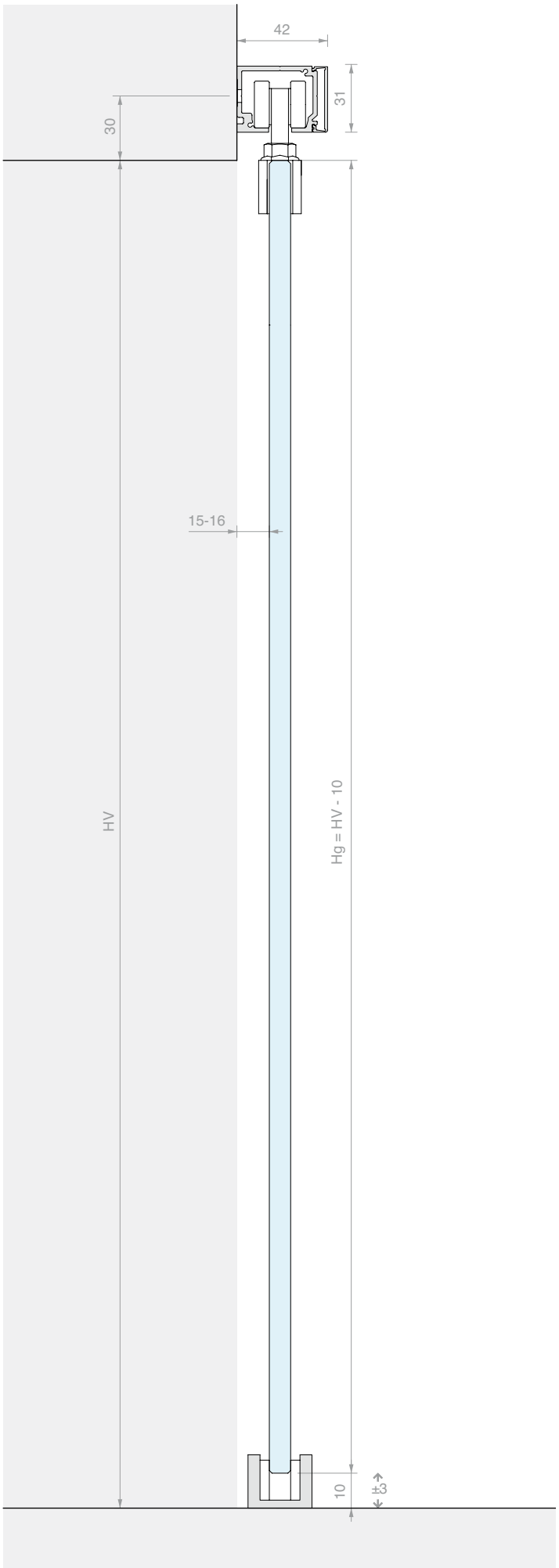

WALL FIXING SLIDING DOOR KIT
SINGLE DOOR WITH LOW COVER

Material: Aluminium
Finish: /6 /88 /97

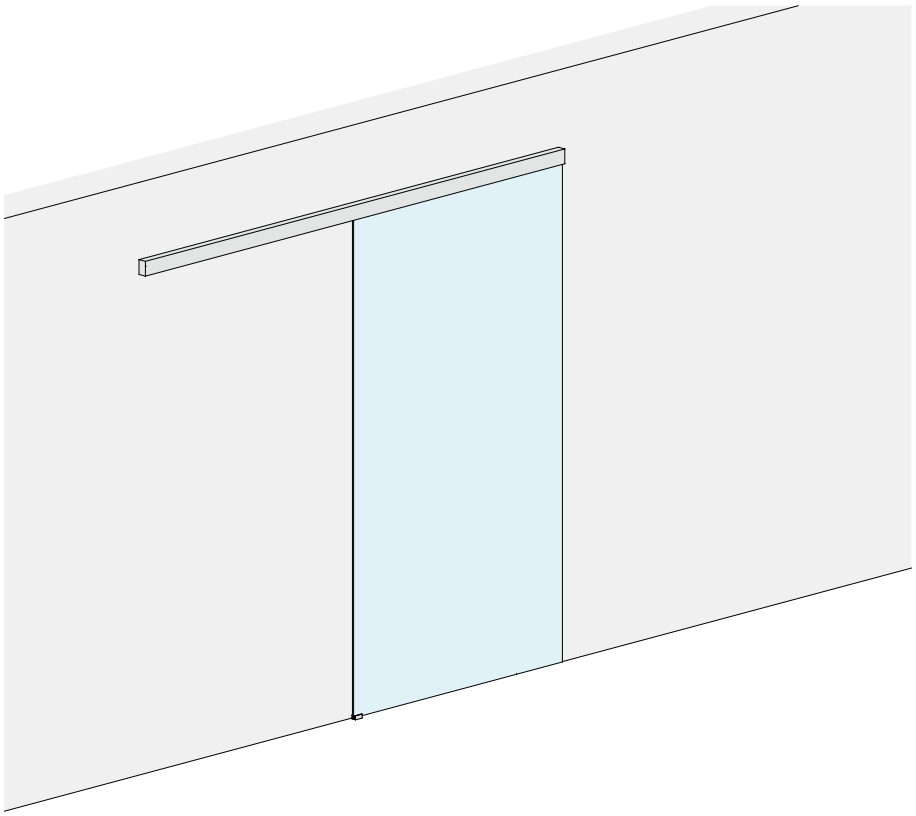

DOOR OPENING SIZE

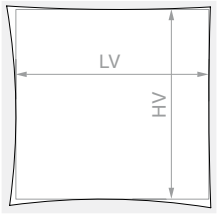

HV max: **3000** mm

DOOR PANEL PANE

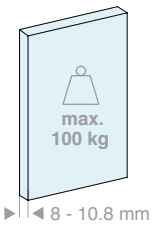

DOOR PANEL PANE

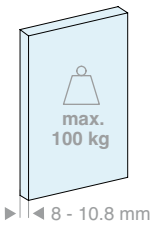

Kit comprising:

Art.	Description	Qty
LM3110.200	Wall fixing track	1 Pc
LM0075C.200	Track cover	1 Pc
LM75042TP33	Finishing cap	2 Pcs
CERPOS170ALL	Clamp	2 Pcs
057.3114.071	Roller with screw and nut	2 Pcs
057.3073.072	End stop with buffer	2 Pcs
LMGF	Floor guide	1 Pc
Optional		
042.3102.072	Softbreak damper, 20-60 kg	1 Pc
042.3102.071	Softbreak damper, 61-100 kg	1 Pc

Kit comprising:

Art.	Description	Qty
LM3110.300	Wall fixing track	1 Pc
LM0075C.300	Track cover	1 Pc
LM75042TP33	Finishing cap	2 Pcs
CERPOS170ALL	Clamp	2 Pcs
057.3114.071	Roller with screw and nut	2 Pcs
057.3073.072	End stop with buffer	2 Pcs
LMGF	Floor guide	1 Pc
Optional		
042.3102.072	Softbreak damper, 20-60 kg	1 Pc
042.3102.071	Softbreak damper, 61-100 kg	1 Pc

Art.	LV max	Qty
LMV7521.200	**920** mm	1 Pc

Art.	LV max	Qty
LMV7521.300	**1420** mm	1 Pc

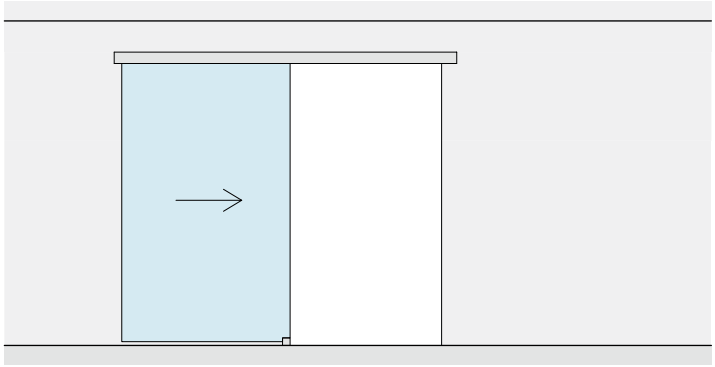

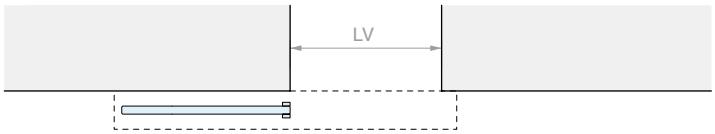

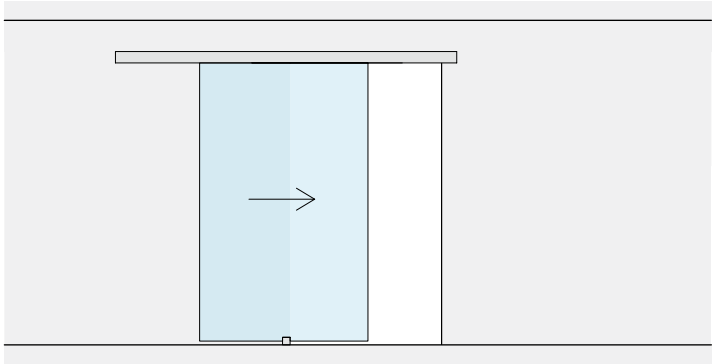

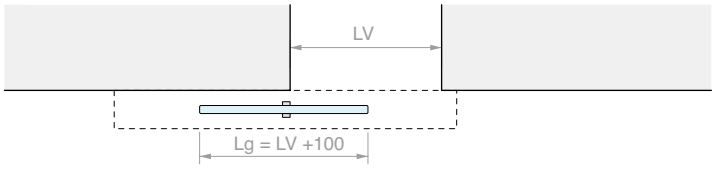

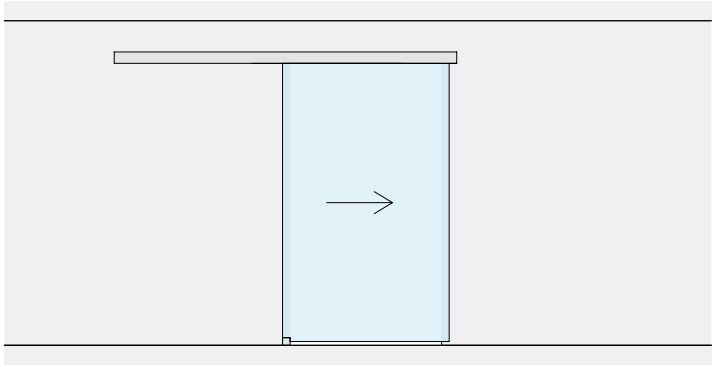

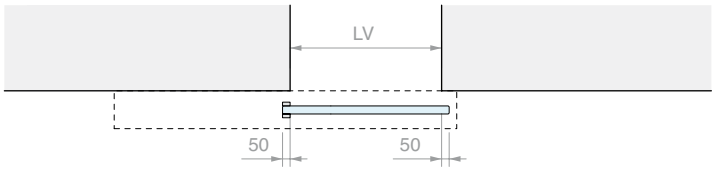

MACHINING OF GLASS FOR CERPOS170

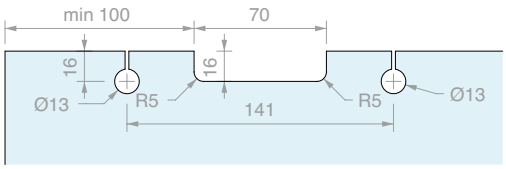

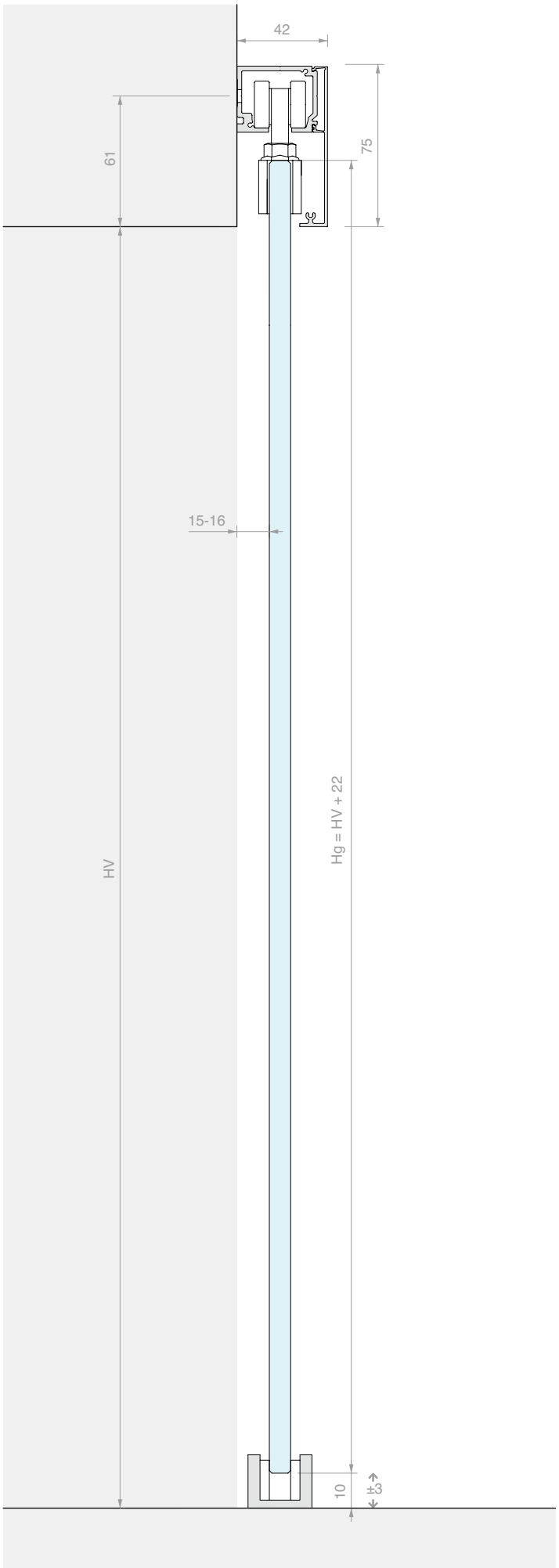

WALL FIXING SLIDING DOOR KIT
SINGLE DOOR WITH HIGH COVER

Material: Aluminium
Finish: /6 /88 /97

WITHOUT HOLES IN THE GLASS

DOOR OPENING SIZE

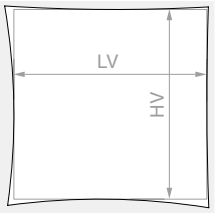

HV max: **3000** mm

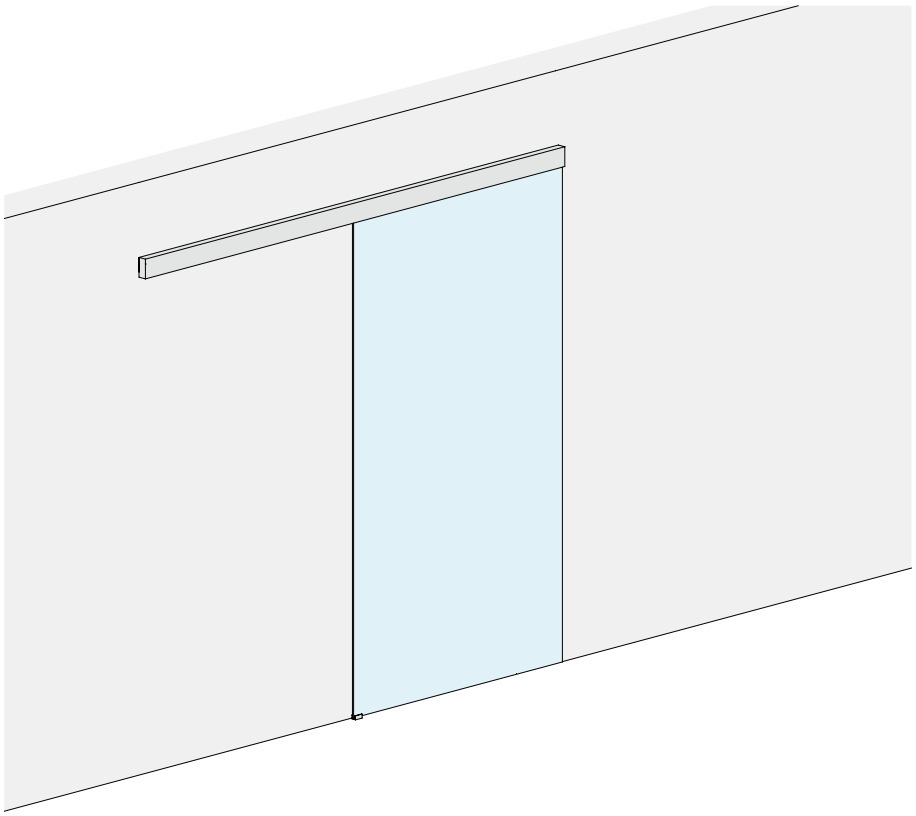

DOOR PANEL PANE

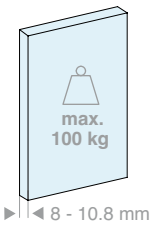

DOOR PANEL PANE

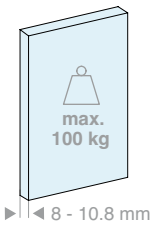

Kit comprising:

Art.	Description	Qty
LM3110.200	Wall fixing track	1 Pc
LM0100C.200	Track cover	1 Pc
LM10042TP33	Finishing cap	2 Pcs
CERPOS514	Clamp	2 Pcs
CARVIT8X40-A2	Roller with screw and nut	2 Pcs
057.3073.072	End stop with buffer	2 Pcs
LMGF	Floor guide	1 Pc
Optional		
042.3102.072	Softbreak damper, 20-60 kg	1 Pc
042.3102.071	Softbreak damper, 61-100 kg	1 Pc

Kit comprising:

Art.	Description	Qty
LM3110.300	Wall fixing track	1 Pc
LM0100C.300	Track cover	1 Pc
LM10042TP33	Finishing cap	2 Pcs
CERPOS514	Clamp	2 Pcs
CARVIT8X40-A2	Roller with screw and nut	2 Pcs
057.3073.072	End stop with buffer	2 Pcs
LMGF	Floor guide	1 Pc
Optional		
042.3102.072	Softbreak damper, 20-60 kg	1 Pc
042.3102.071	Softbreak damper, 61-100 kg	1 Pc

Art.	LV max	Qty
LMV10021.200	**920** mm	1 Pc

Art.	LV max	Qty
LMV10021.300	**1420** mm	1 Pc

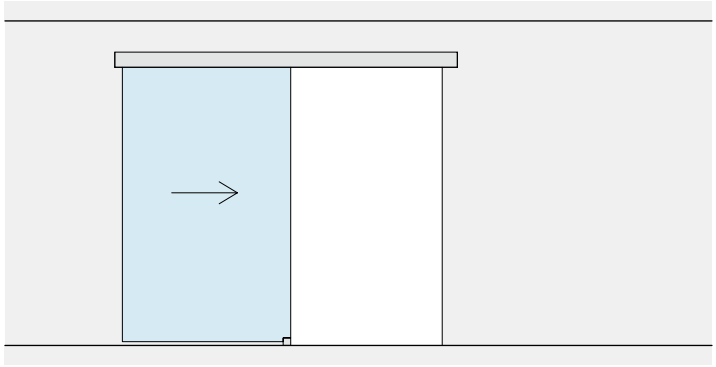

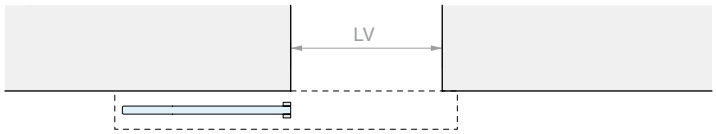
LV

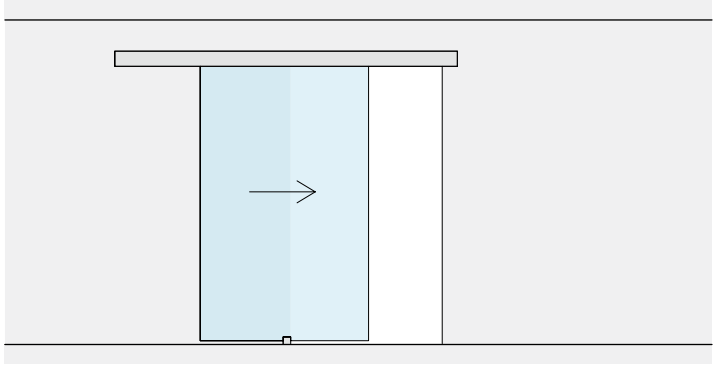

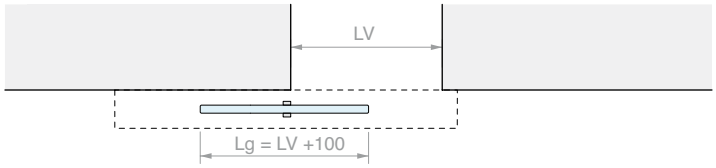
LV
Lg = LV +100

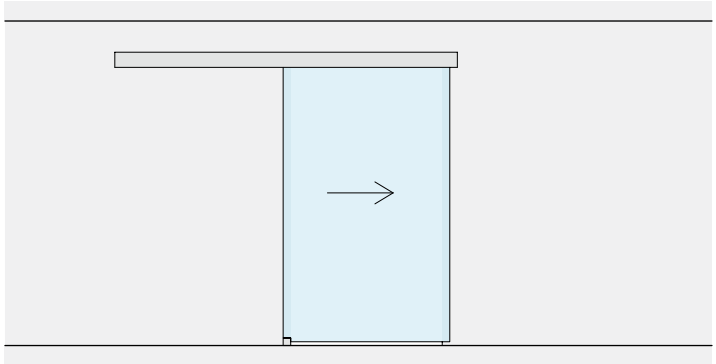

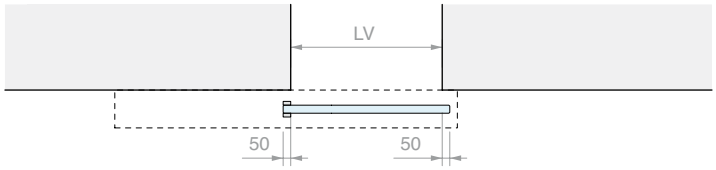
LV
50
50

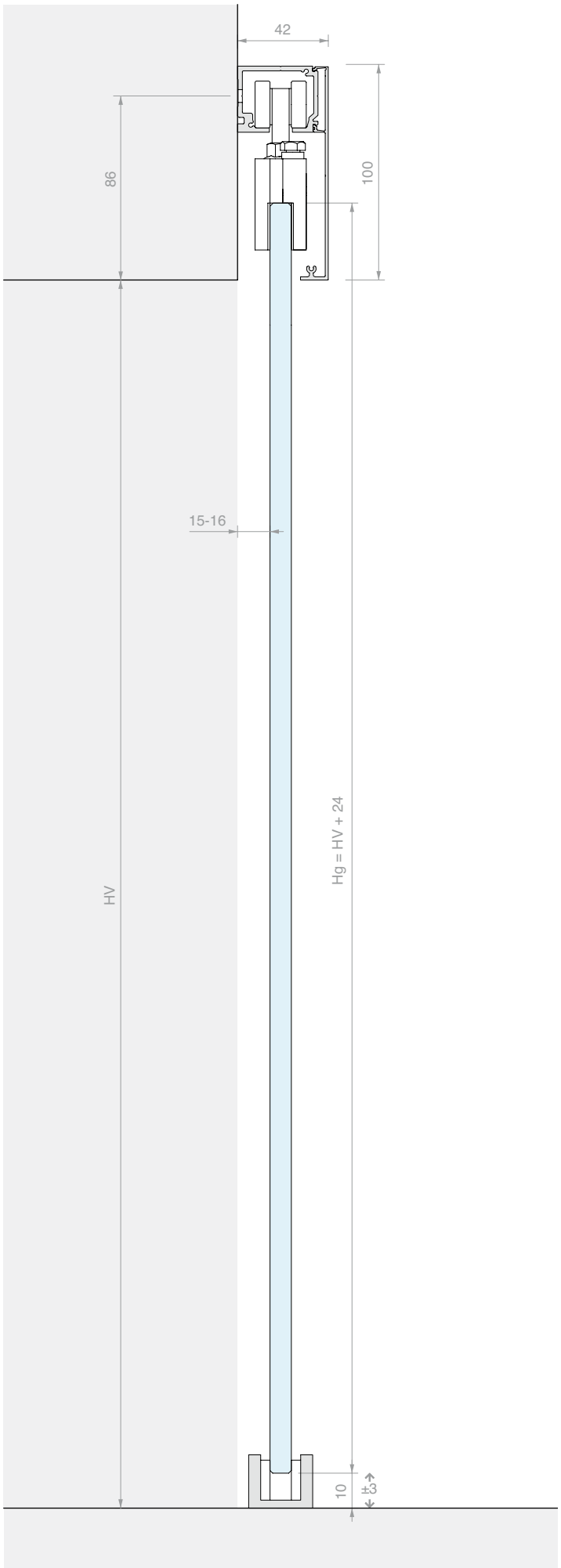
42
86
100
15-16
HV
Hg = HV + 24
10
±3

SLIDING DOOR KIT, CEILING FIXING
DOUBLE SLIDING DOOR WITH VISIBLE CLAMPS

Material: Aluminium
Finish: /6 /88 /97

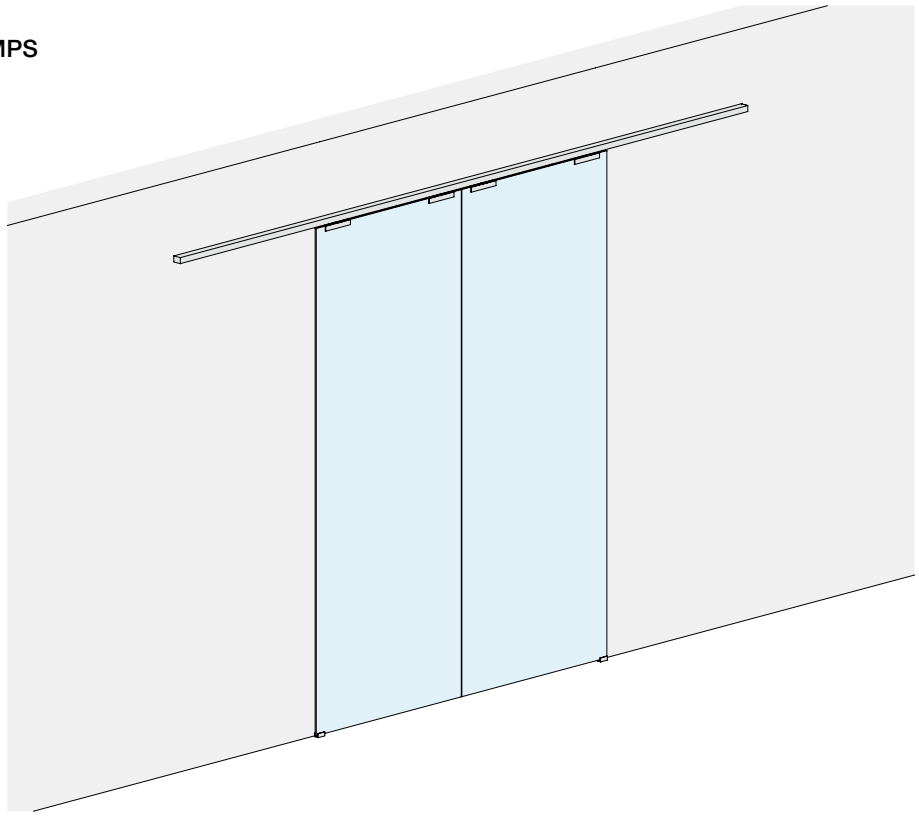

DOOR OPENING SIZE

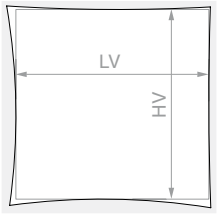

HV max: **3000** mm

DOOR PANEL PANE

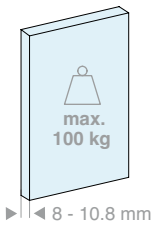

Kit comprising:

Art.	Description	Qty
LM3110.400	Wall fixing track	1 Pc
LM3120.400	Track cover	1 Pc
LM31042TP32	Finishing cap	2 Pcs
CERPOS170COV	Clamp	4 Pcs
057.3114.071	Roller with screw and nut	4 Pcs
057.3073.072	End stop with buffer	4 Pcs
LMGF	Floor guide	2 Pcs
Optional		
042.3102.072	Softbreak damper, 20-60 kg	2 Pcs
042.3102.071	Softbreak damper, 61-100 kg	2 Pcs

Art.	LV max	Qty
LMV3121C.400	**1940** mm	1 Pc

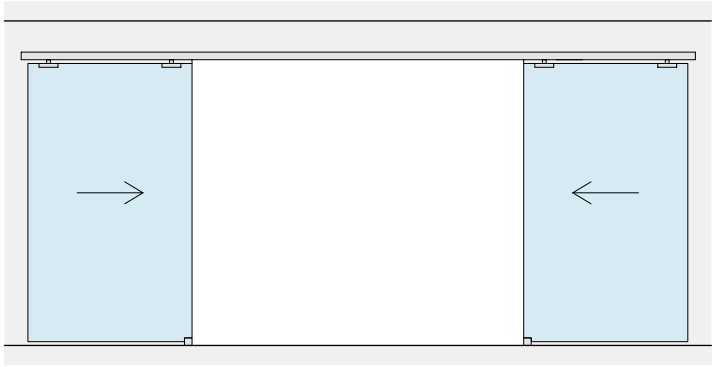

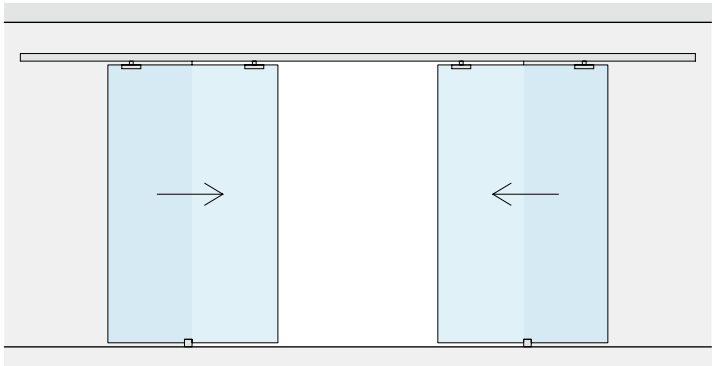

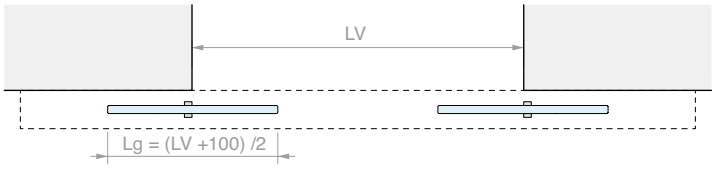

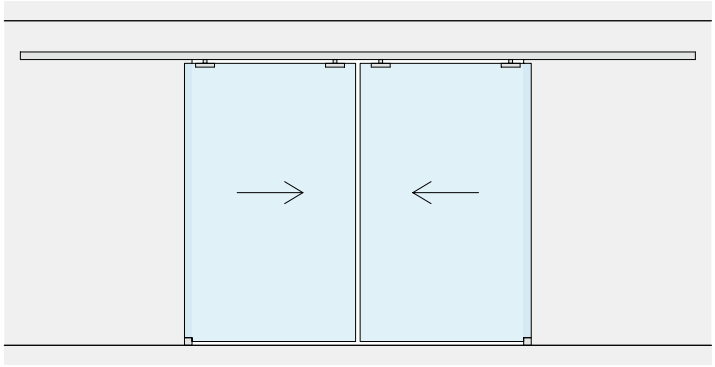

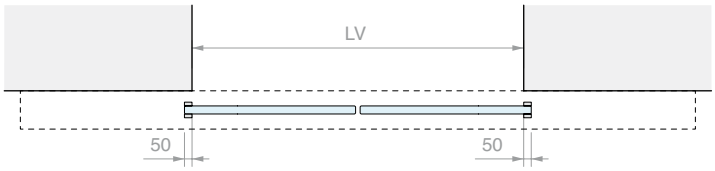

MACHINING OF GLASS FOR CERPOS170

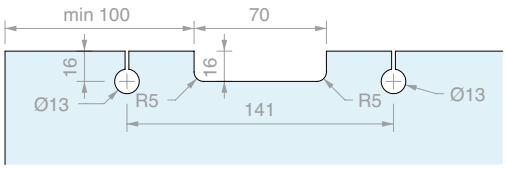

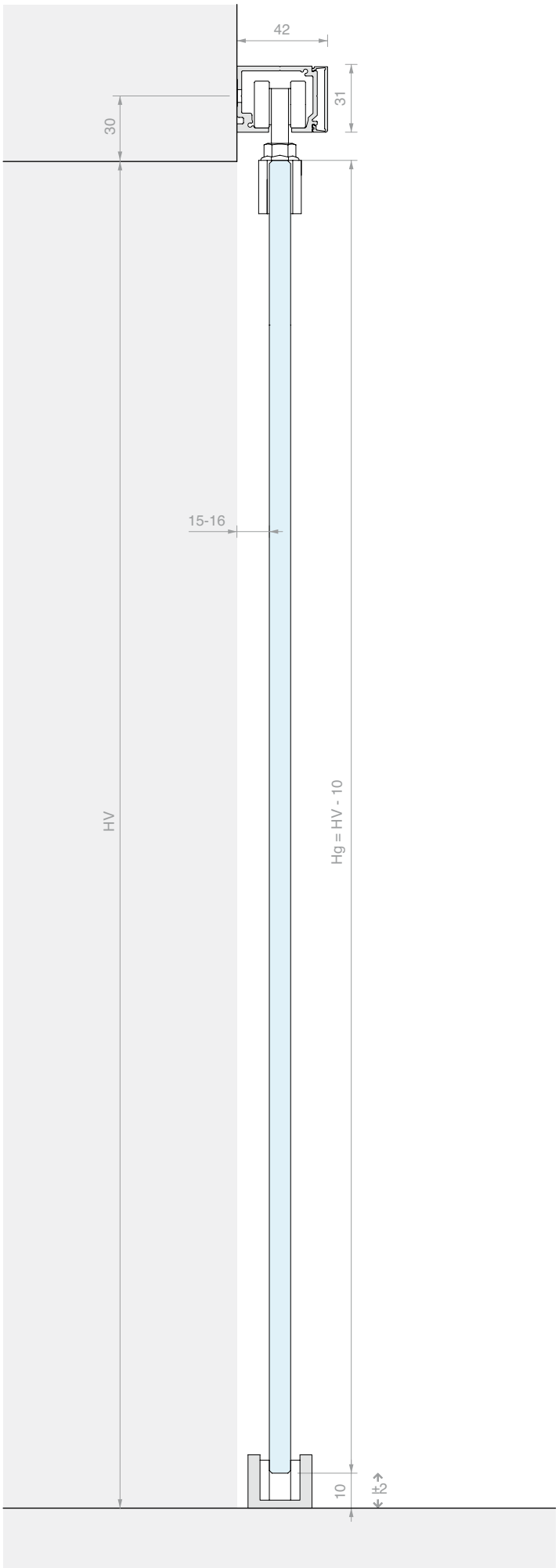

WALL FIXING SLIDING DOOR KIT
DOUBLE DOOR SYNCHRONISED WITH LOW COVER

Material: Aluminium
Finish: /6 /88 /97

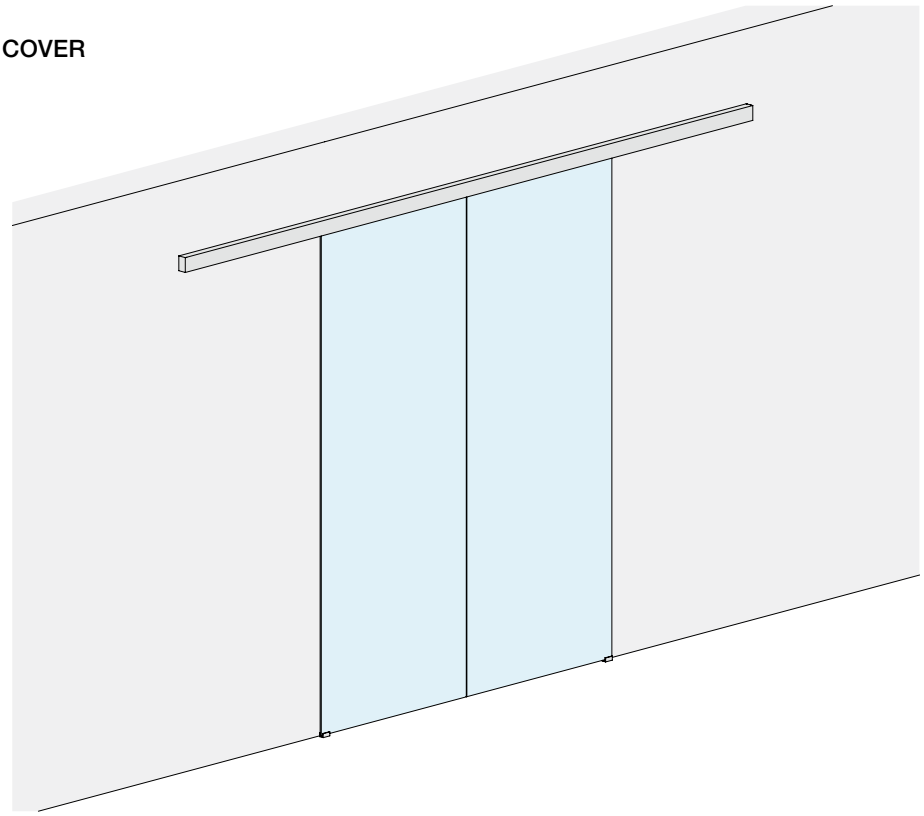

DOOR OPENING SIZE

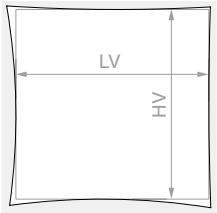

HV max: **3000** mm

DOOR PANEL PANE

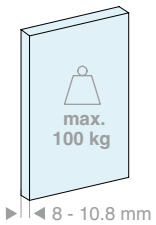

Kit comprising:

Art.	Description	Qty
LM3110.400	Wall fixing track	1 Pc
LM0075C.400	Track cover	1 Pc
LM75042TP33	Finishing cap	2 Pcs
CERPOS170ALL	Clamp	2 Pcs
CERPOS170SYNC	Clamp for synchronisation	2 Pcs
057.3114.071	Roller with screw and nut	4 Pcs
057.3073.071	End stop without buffer	4 Pcs
LMGF	Floor guide	2 Pcs
LMSIN-2AC170	Synchronisation kit	1 Pc
Optional		
042.3102.072	Softbreak damper, 20-60 kg	2 Pcs
042.3102.071	Softbreak damper, 61-100 kg	2 Pcs

Art.	LV max	Qty
LMV7521C.400	**1900** mm	1 Pc

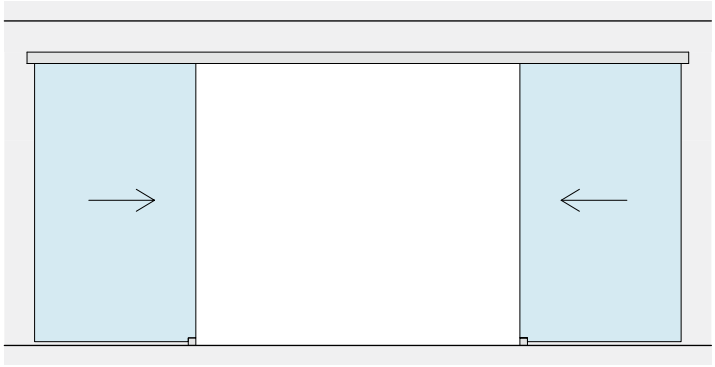

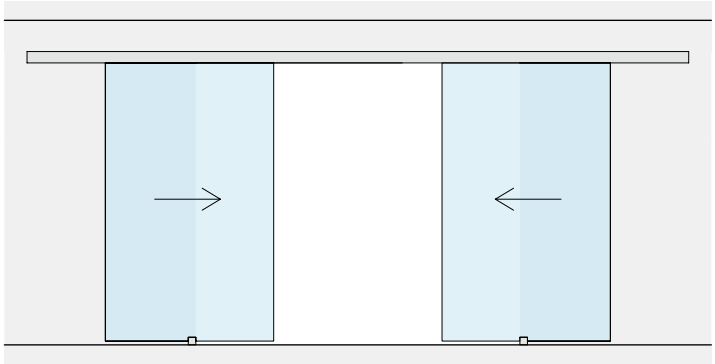

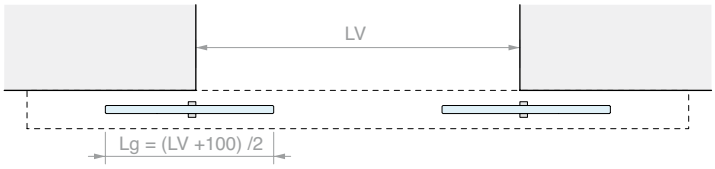

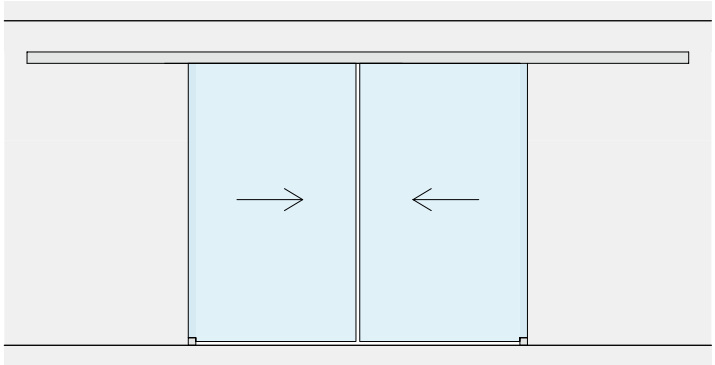

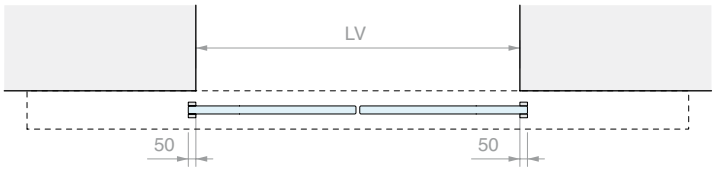

MACHINING OF GLASS FOR CERPOS170

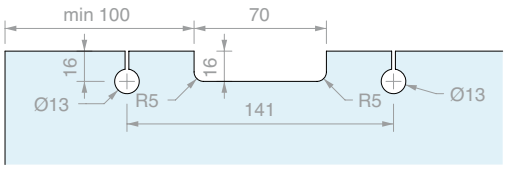

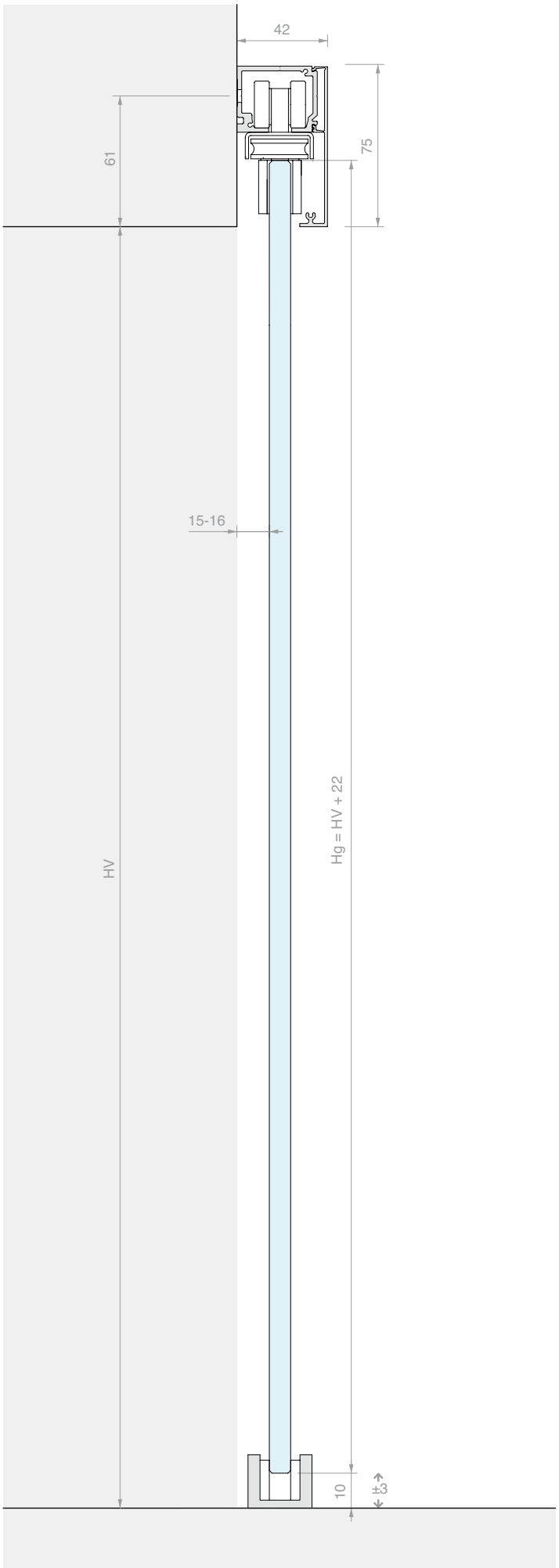

WALL FIXING SLIDING DOOR KIT
DOUBLE DOOR SYNCHRONISED WITH HIGH COVER

Material: Aluminium
Finish: /6 /88 /97

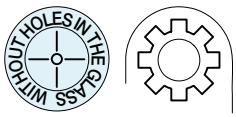

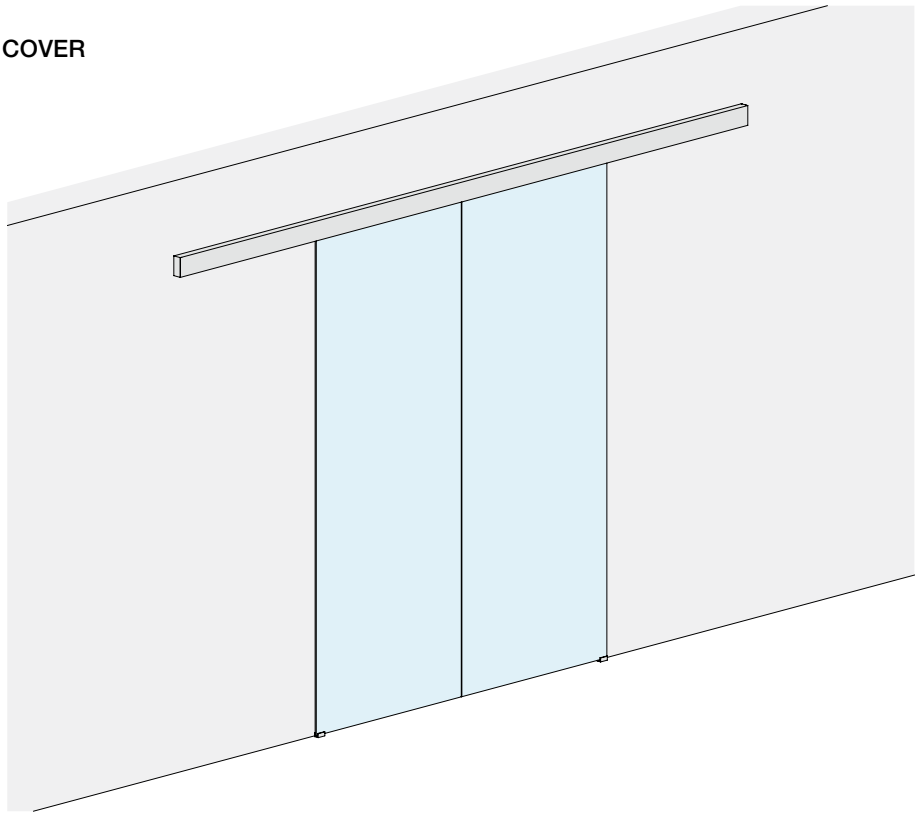

DOOR OPENING SIZE

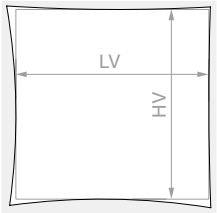

HV max: **3000** mm

DOOR PANEL PANE

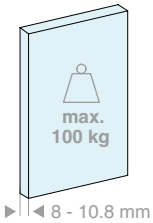

Kit comprising:

Art.	Description	Qty
LM3110.400	Wall fixing track	1 Pc
LM0100C.400	Track cover	1 Pc
LM10042TP33	Finishing cap	2 Pcs
CERPOS514	Clamp	2 Pcs
CERPOS514-C	Clamp for synchronisation	2 Pcs
CARVIT8X40-A2	Roller with screw and nut	4 Pcs
057.3073.071	End stop without buffer	4 Pcs
LMGF	Floor guide	2 Pcs
LMSIN-2AC500	Synchronisation kit	1 Pc
Optional		
042.3102.072	Softbreak damper, 20-60 kg	2 Pcs
042.3102.071	Softbreak damper, 61-100 kg	2 Pcs

Art.	LV max	Qty
LMV10021C.400	**1940** mm	1 Pc

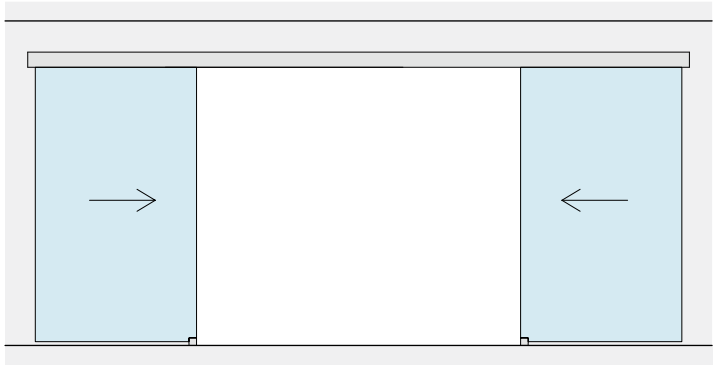

LV

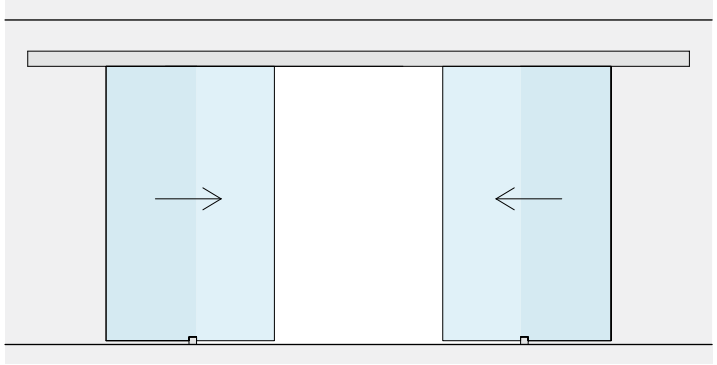

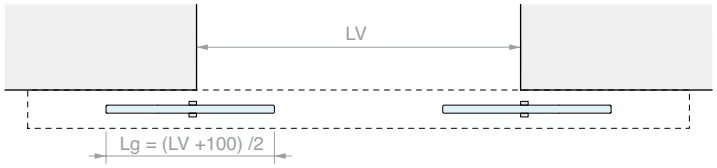
LV
Lg = (LV +100) /2

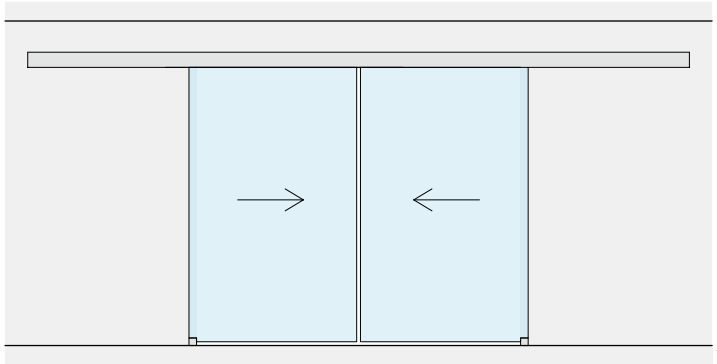

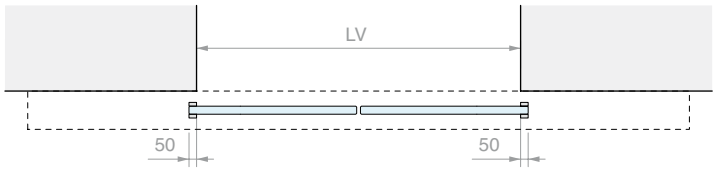
LV
50
50

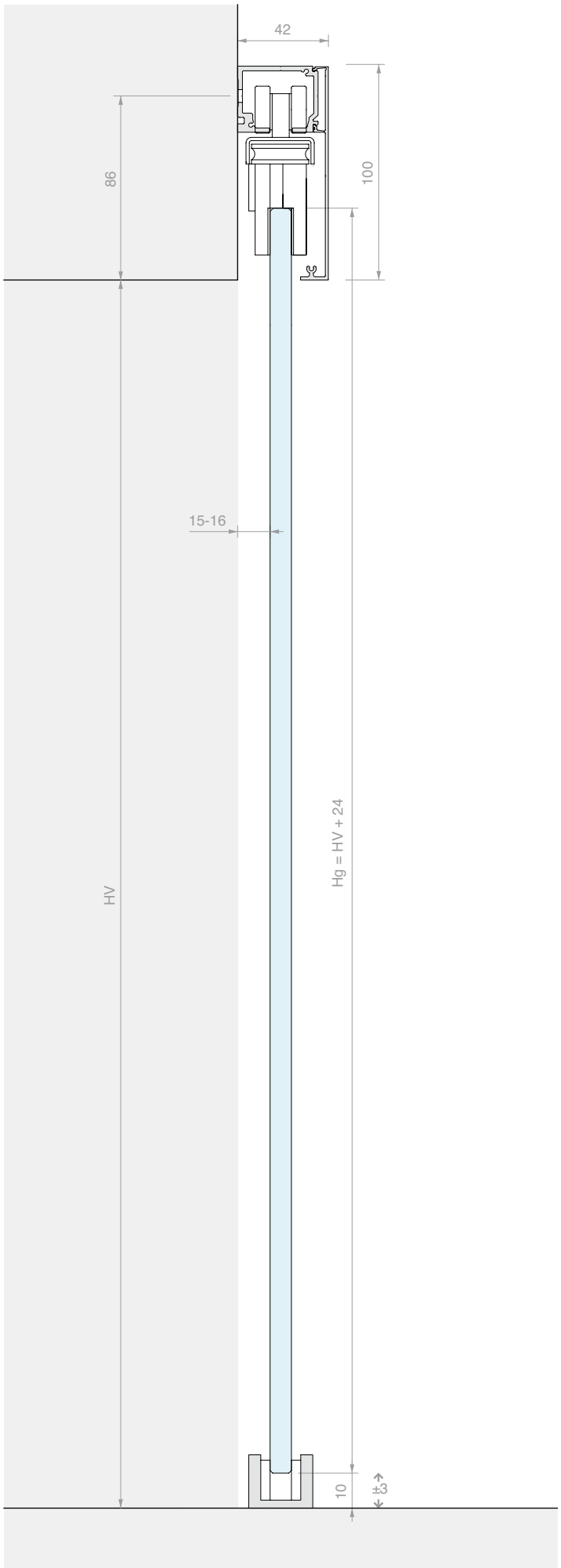
42
86
100
15-16
HV
Hg = HV + 24
10
±3

WHITE

WALL FIXING SLIDING DOOR KIT
SINGLE DOOR AND FIXED GLASS WITH LOW COVER

Material: Aluminium
Finish: /6 /88 /97

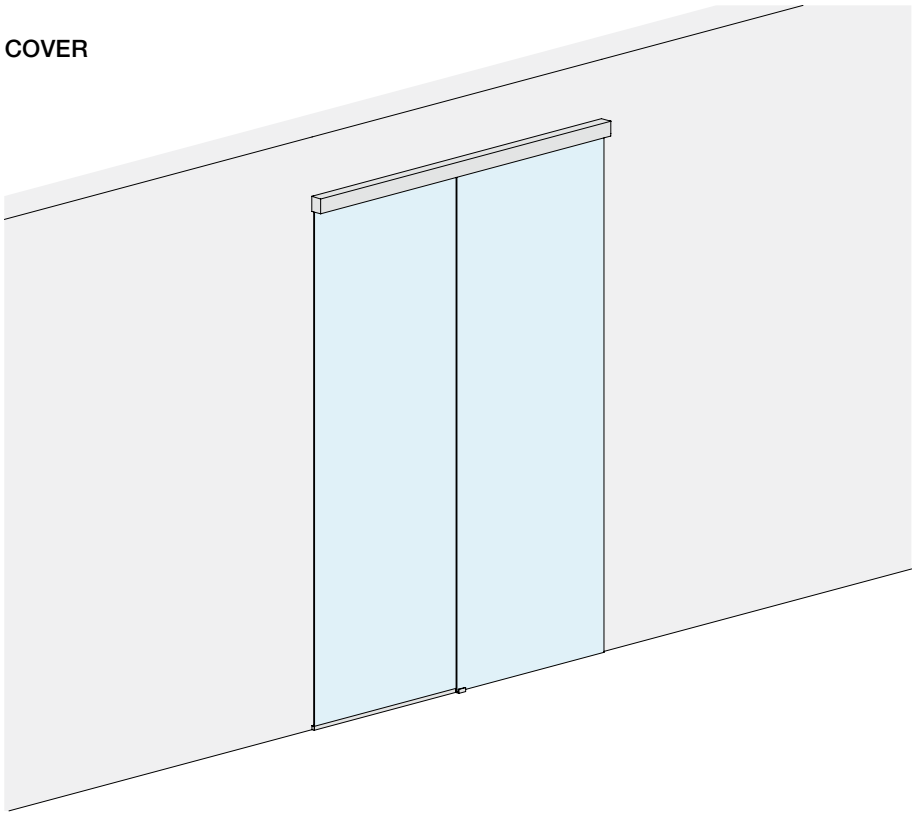

DOOR OPENING SIZE

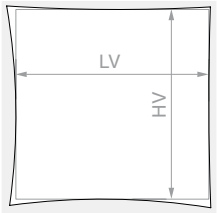

HV max: **3000** mm

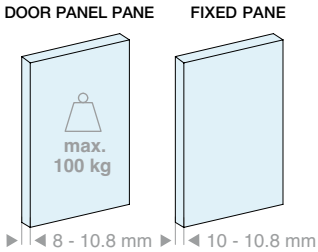

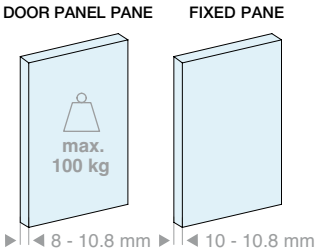

Kit comprising:

Art.	Description	Qty
LM3110.200	Wall fixing track	1 Pc
LM26075.200	Fixed glass profile	1 Pc
LM0075C.200	Track cover	1 Pc
LMC13.100	Finishing profile	1 Pc
LMU20.150	U profile	1 Pc
LMU20TP	Finishing cap	2 Pcs
GTUP2	Glass holder gasket	2 m
LM75059TP33	Finishing cap	2 Pcs
CERPOS170ALL	Clamp	2 Pcs
057.3114.071	Roller with screw and nut	2 Pcs
057.3073.072	End stop with buffer	2 Pcs
LMGF	Floor guide	1 Pc
Optional		
042.3102.072	Softbreak damper, 20-60 kg	1 Pc
042.3102.071	Softbreak damper, 61-100 kg	1 Pc

Art.	LV max	Qty
LMV7521F.200	**1880** mm	1 Pc

Kit comprising:

Art.	Description	Qty
LM3110.300	Wall fixing track	1 Pc
LM26075.300	Fixed glass profile	1 Pc
LM0075C.300	Track cover	1 Pc
LMC13.200	Finishing profile	1 Pc
LMU20.300	U profile	1 Pc
LMU20TP	Finishing cap	2 Pcs
GTUP2	Glass holder gasket	3 m
LM75059TP33	Finishing cap	2 Pcs
CERPOS170ALL	Clamp	2 Pcs
057.3114.071	Roller with screw and nut	2 Pcs
057.3073.072	End stop with buffer	2 Pcs
LMGF	Floor guide	1 Pc
Optional		
042.3102.072	Softbreak damper, 20-60 kg	1 Pc
042.3102.071	Softbreak damper, 61-100 kg	1 Pc

Art.	LV max	Qty
LMV7521F.300	**2880** mm	1 Pc

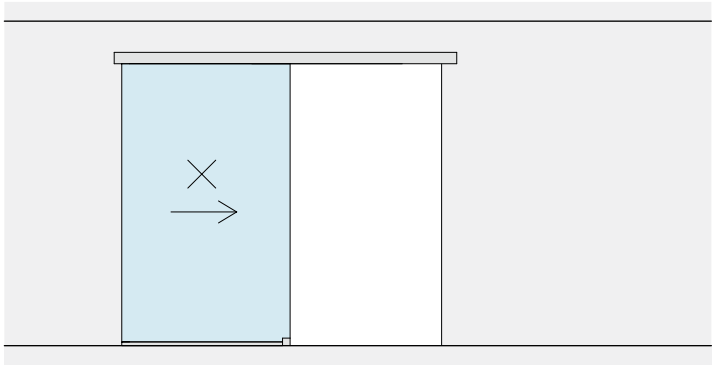

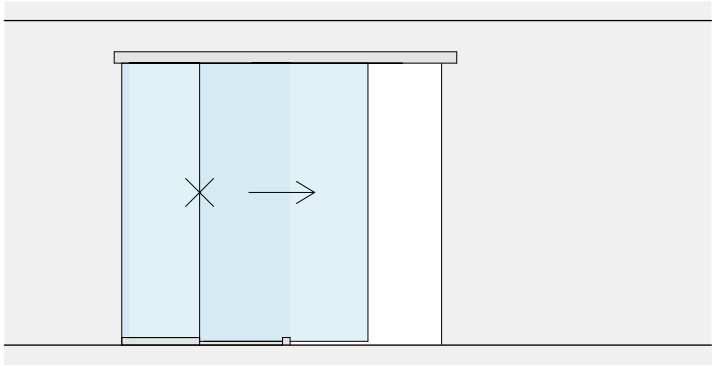

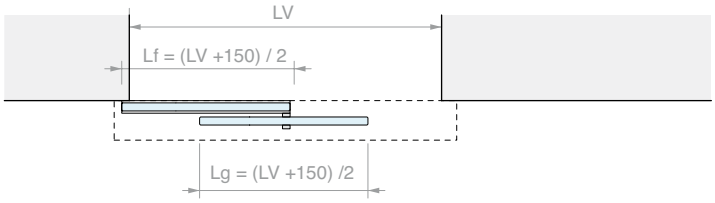

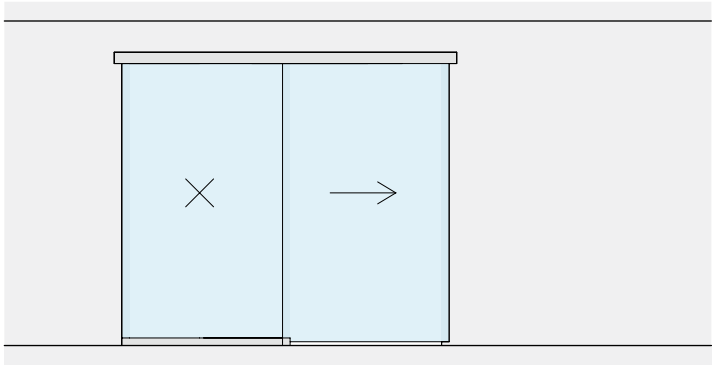

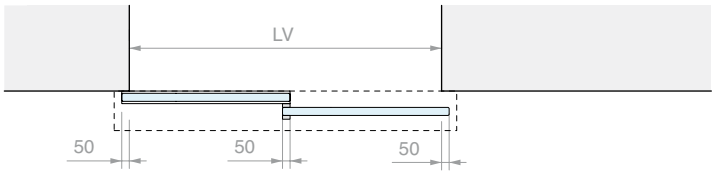

MACHINING OF GLASS FOR CERPOS170

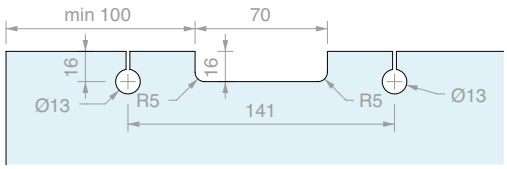

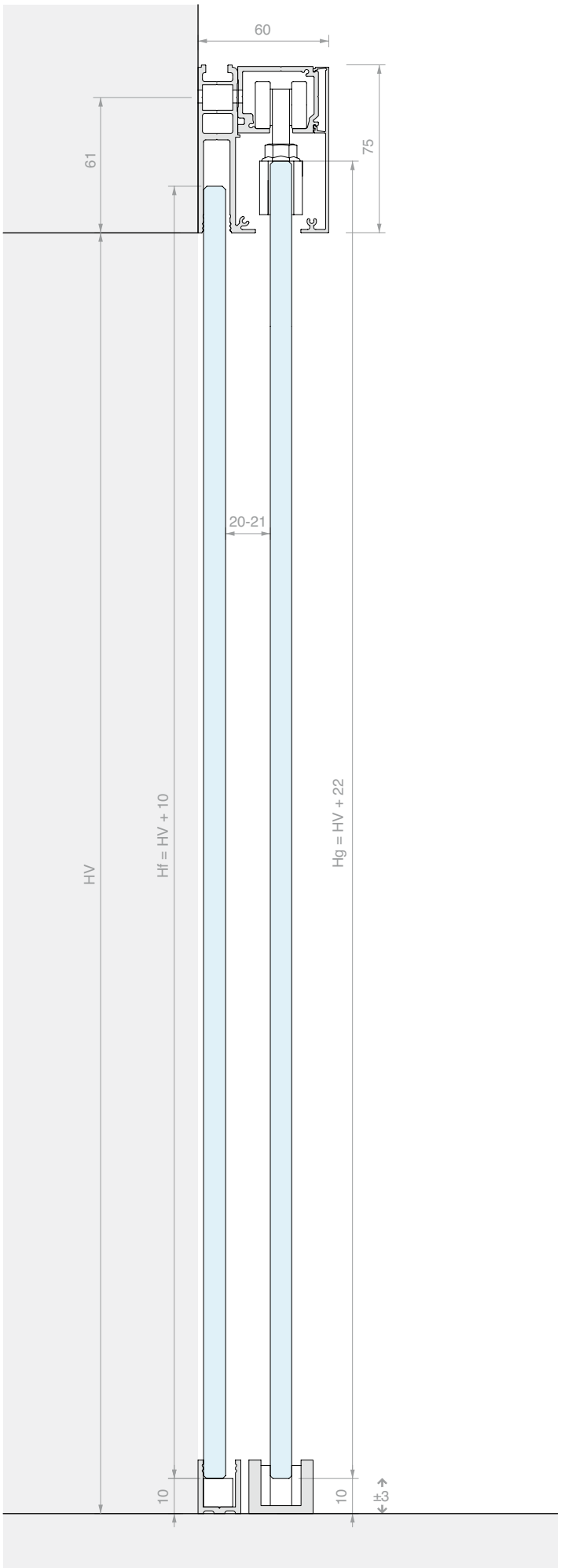

WALL FIXING SLIDING DOOR KIT
SINGLE DOOR AND FIXED GLASS WITH HIGH COVER

Material: Aluminium
Finish: /6 /88 /97

WITHOUT HOLES IN THE GLASS

DOOR OPENING SIZE

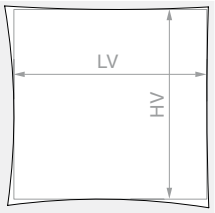

HV max: **3000** mm

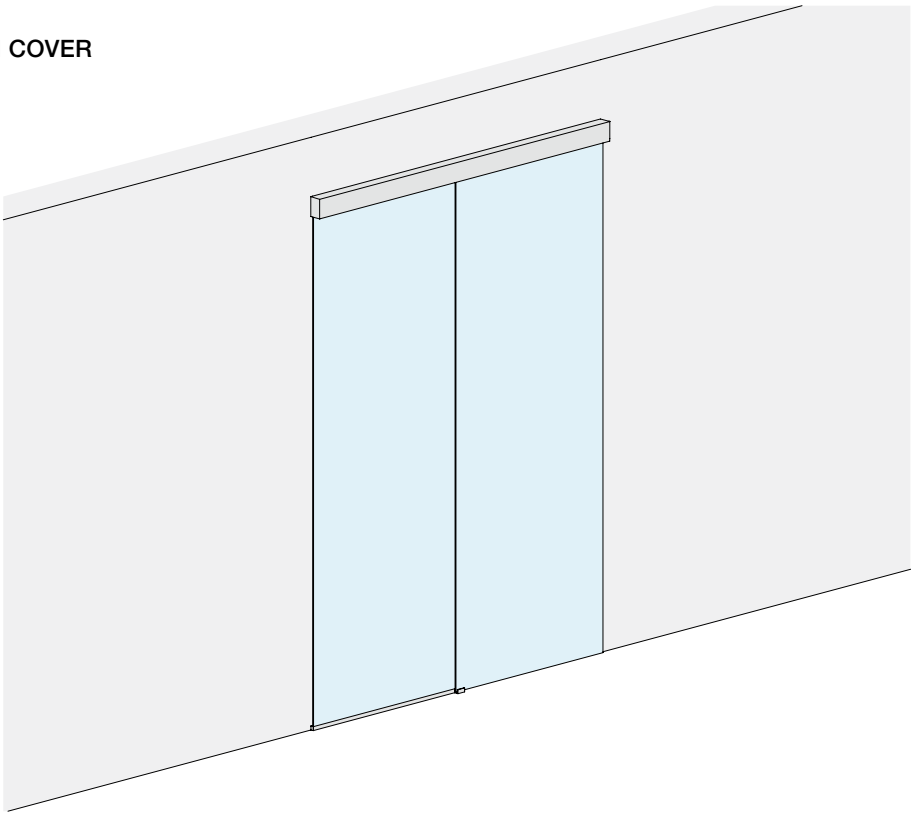

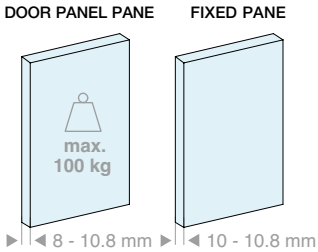

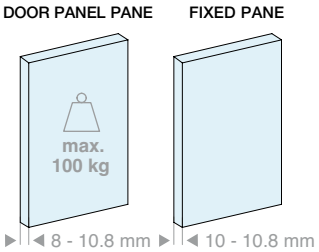

Kit comprising:

Art.	Description	Qty
LM3110.200	Wall fixing track	1 Pc
LM26100.200	Fixed glass profile	1 Pc
LM0100C.200	Track cover	1 Pc
LMC13.100	Finishing profile	1 Pc
LMU20.150	U profile	1 Pc
LMU20TP	Finishing cap	2 Pcs
GTUP2	Glass holder gasket	2 m
LM10059TP33	Finishing cap	2 Pcs
CERPOS514	Clamp	2 Pcs
CARVIT8X40-A2	Roller with screw and nut	2 Pcs
057.3073.072	End stop with buffer	2 Pcs
LMGF	Floor guide	1 Pc
Optional		
042.3102.072	Softbreak damper, 20-60 kg	1 Pc
042.3102.071	Softbreak damper, 61-100 kg	1 Pc

Art.	LV max	Qty
LMV10021F.200	**1880** mm	1 Pc

Kit comprising:

Art.	Description	Qty
LM3110.300	Wall fixing track	1 Pc
LM26100.300	Fixed glass profile	1 Pc
LM0100C.300	Track cover	1 Pc
LMC13.200	Finishing profile	1 Pc
LMU20.300	U profile	1 Ps
LMU20TP	Finishing cap	2 Pcs
GTUP2	Glass holder gasket	3 m
LM10059TP33	Finishing cap	2 Pcs
CERPOS514	Clamp	2 Pcs
CARVIT8X40-A2	Roller with screw and nut	2 Pcs
057.3073.072	End stop with buffer	2 Pcs
LMGF	Floor guide	1 Pc
Optional		
042.3102.072	Softbreak damper, 20-60 kg	1 Pc
042.3102.071	Softbreak damper, 61-100 kg	1 Pc

Art.	LV max	Qty
LMV10021F.300	**2880** mm	1 Pc

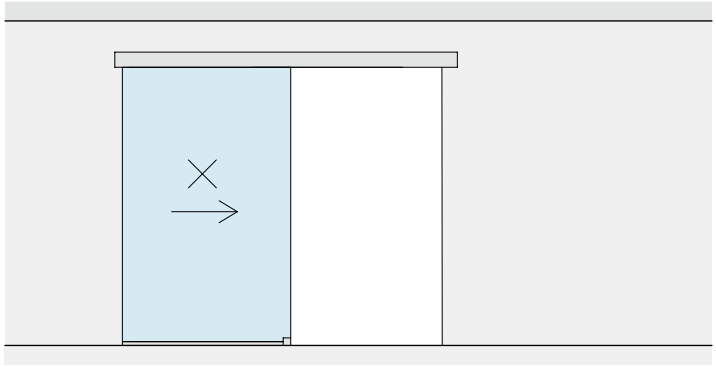

LV

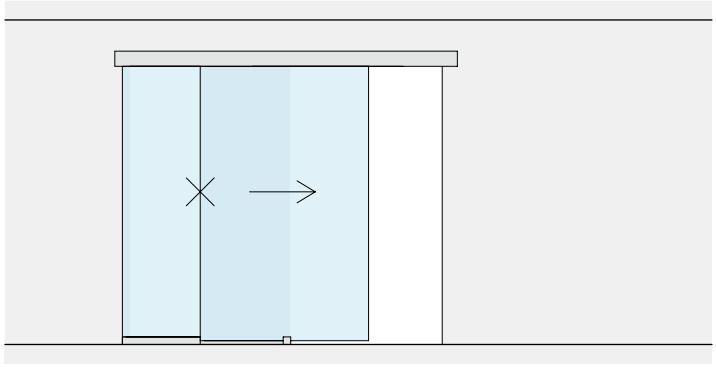

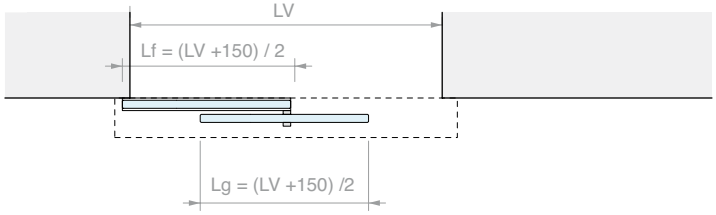
LV
Lf = (LV +150) / 2
Lg = (LV +150) /2

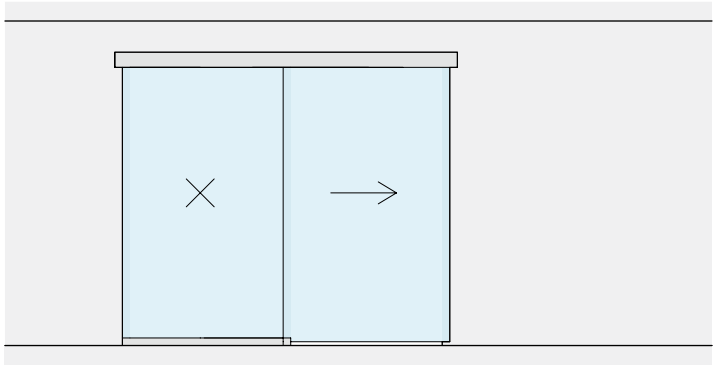

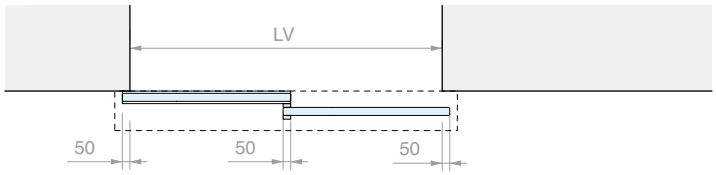
LV
50
50
50

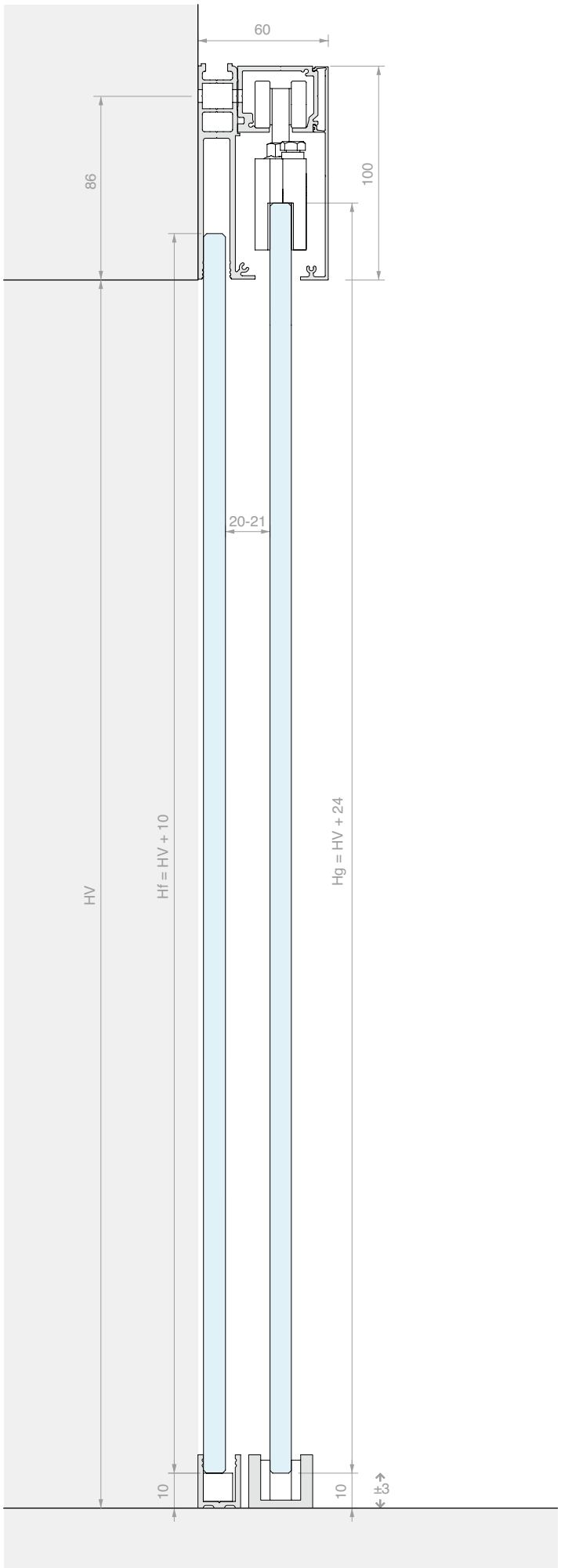
60
86
100
20-21
HV
Hf = HV + 10
Hg = HV + 24
10
10
±3

WALL FIXING SLIDING DOOR KIT
SYNCHRONISED DOUBLE DOOR AND DOUBLE FIXED GLASS WITH LOW COVER

Material: Aluminium
Finish: /6 /88 /97

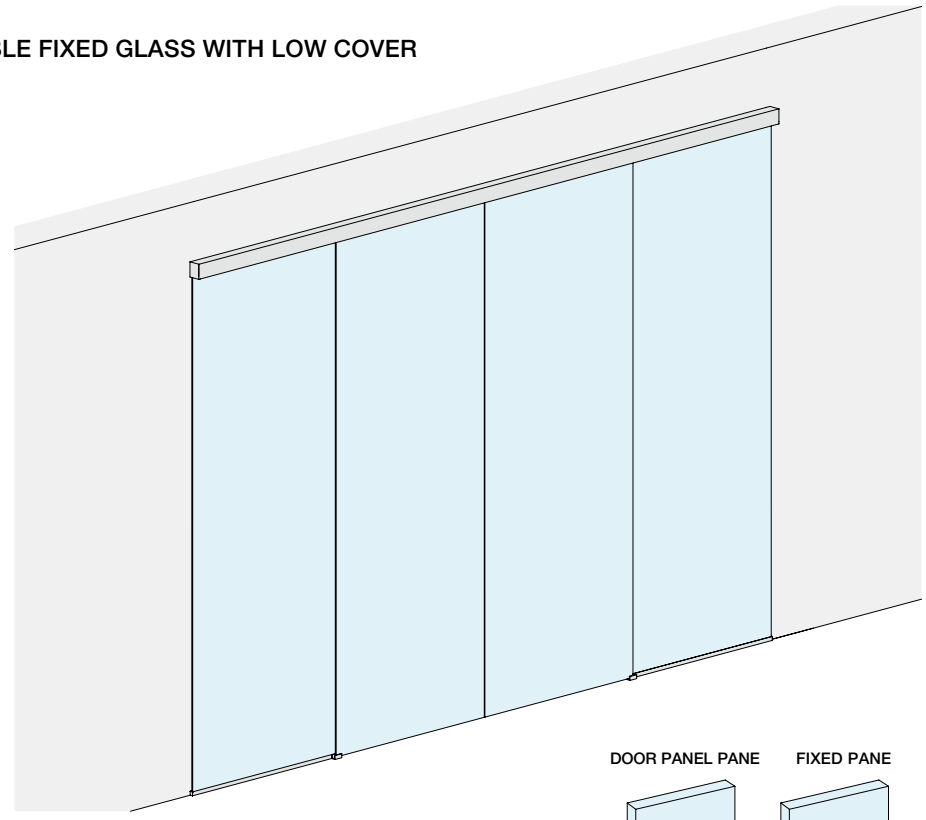

DOOR OPENING SIZE

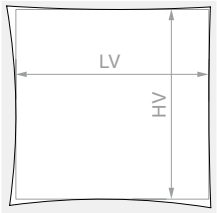

HV max: **3000** mm

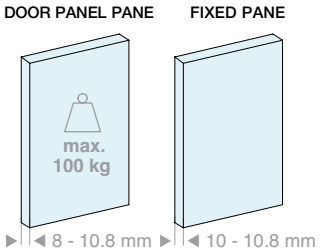

Kit comprising:

Art.	Description	Qty
LM3110.400	Wall fixing track	1 Pc
LM26075.400	Fixed glass profile	1 Pc
LM0075C.400	Track cover	1 Pc
LMC13.200	Finishing profile	1 Pc
LMU20.300	U profile	1 Pc
LMU20TP	Cap	4 Pcs
GTUP2	Glass holder gasket	4 m
LM75059TP33	Finishing cap	2 Pcs
CERPOS170ALL	Clamp	2 Pcs
CERPOS170SYNC	Clamp for synchronisation	2 Pcs
057.3114.071	Roller with screw and nut	4 Pcs
057.3073.071	End stop without buffer	4 Pcs
LMGF	Floor guide	2 Pcs
LMSIN-2AC170	Synchronisation kit	1 Pc

Optional

042.3102.072	Softbreak damper, 20-60 kg	2 Pcs
042.3102.071	Softbreak damper, 61-100 kg	2 Pcs

Art.	LV max	Qty
LMV7521CF.400	**3880** mm	1 Pc

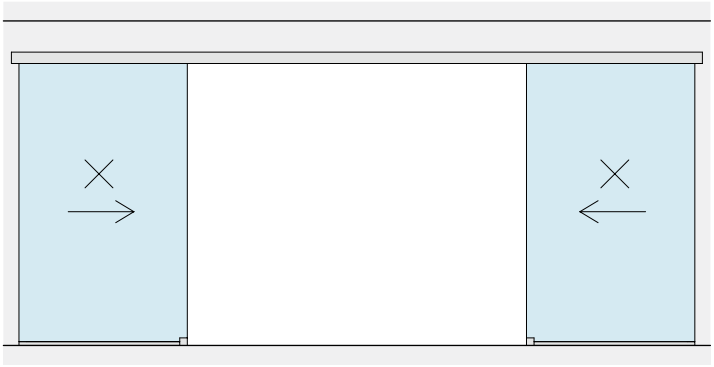

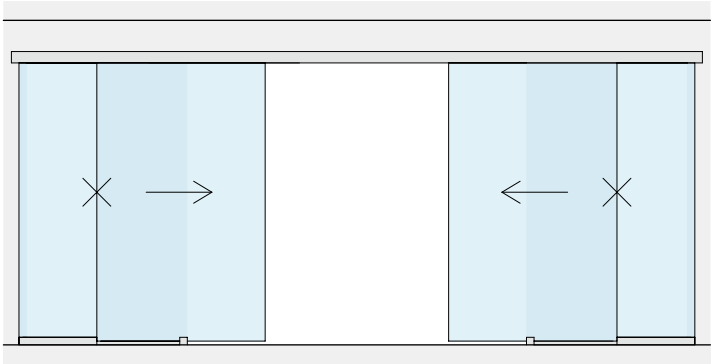

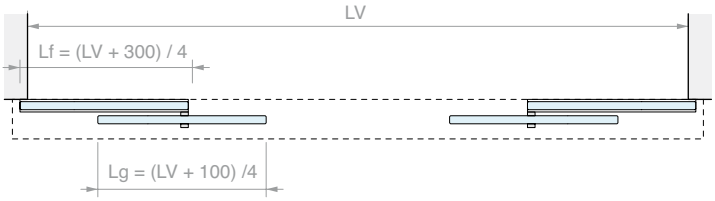

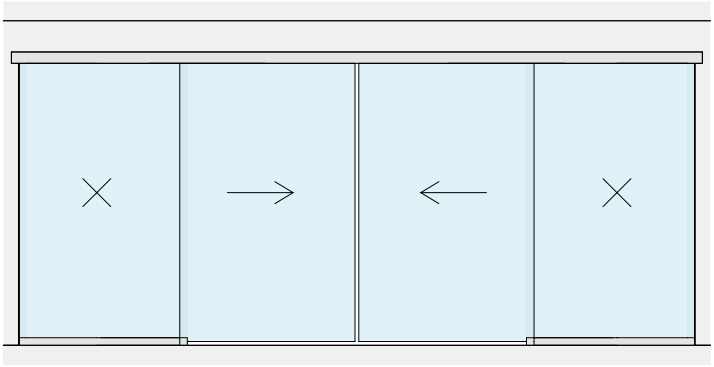

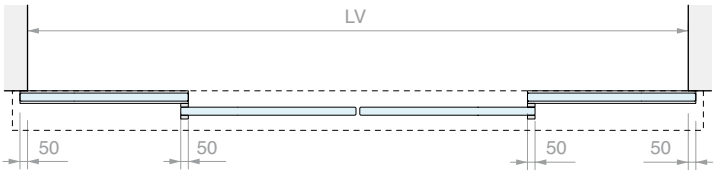

MACHINING OF GLASS FOR CERPOS170

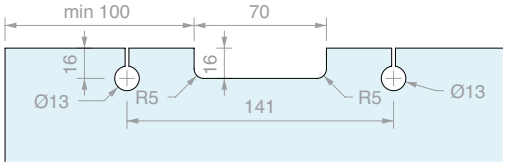

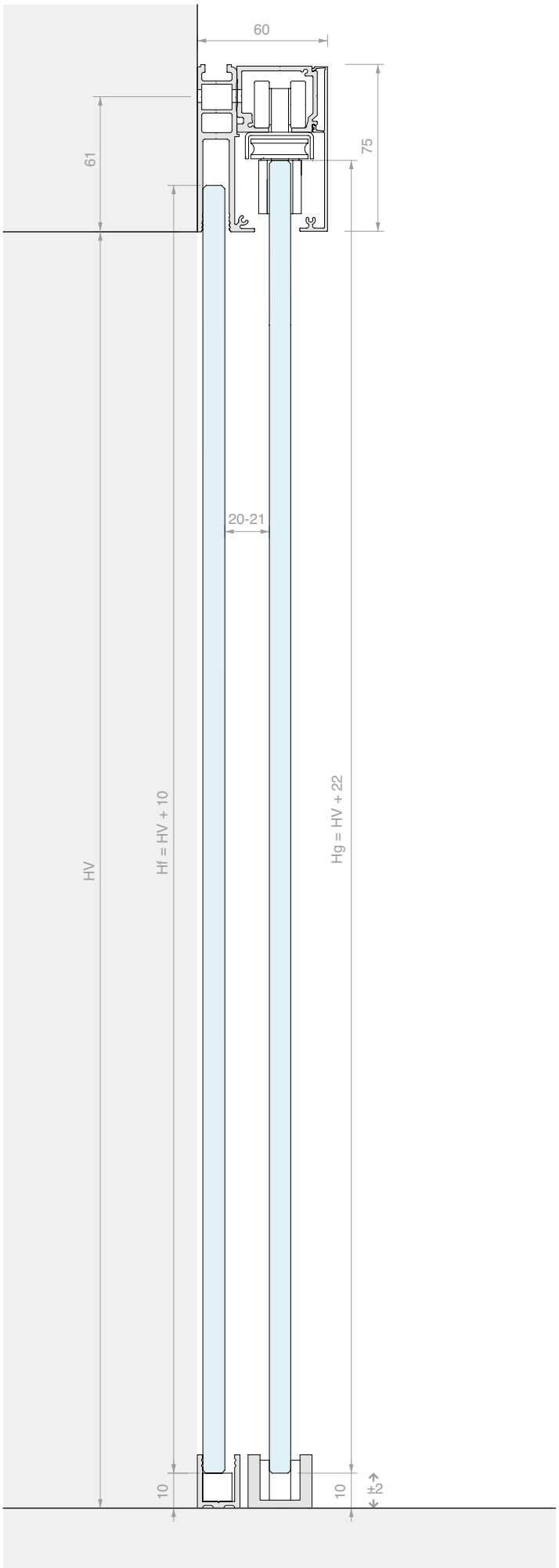

WALL FIXING SLIDING DOOR KIT
SYNCHRONISED DOUBLE DOOR AND DOUBLE FIXED GLASS WITH HIGH COVER

Material: Aluminium
Finish: /6 /88 /97

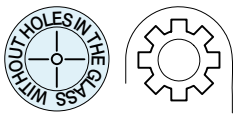

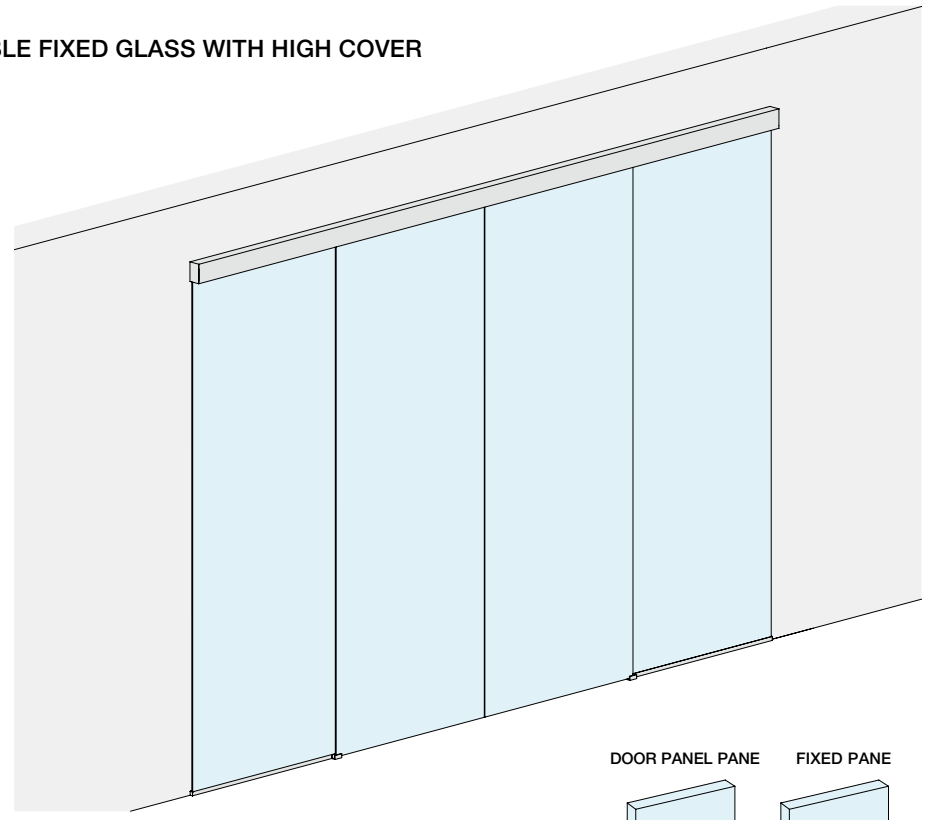

DOOR OPENING SIZE

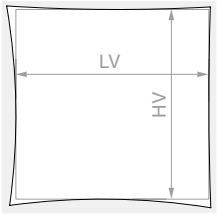

HV max: **3000** mm

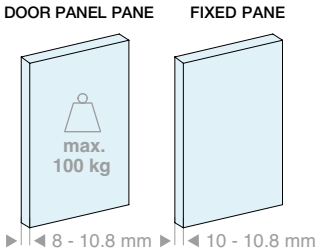

Kit comprising:

Art.	Description	Qty
LM3110.400	Wall fixing track	1 Pc
LM26100.400	Fixed glass profile	1 Pc
LM0100C.400	Track cover	1 Pc
LMC13.200	Finishing profile	1 Pc
LMU20.300	U profile	1 Pc
LMU20TP	Cap	4 Pcs
GTUP2	Glass holder gasket	4 m
LM10059TP33	Finishing cap	2 Pcs
CERPOS514	Clamp	2 Pcs
CERPOS514-C	Clamp for synchronisation	2 Pcs
CARVIT8X40-A2	Roller with screw and nut	4 Pcs
057.3073.071	End stop without buffer	4 Pcs
LMGF	Floor guide	2 Pcs
LMSIN-2AC500	Synchronisation kit	1 Pc

Optional

042.3102.072	Softbreak damper, 20-60 kg	2 Pcs
042.3102.071	Softbreak damper, 61-100 kg	2 Pcs

Art.	LV max	Qty
LMV10021CF.400	**3880** mm	1 Pc

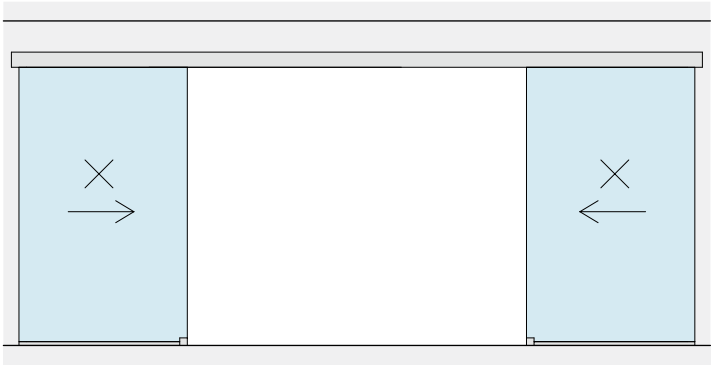

LV

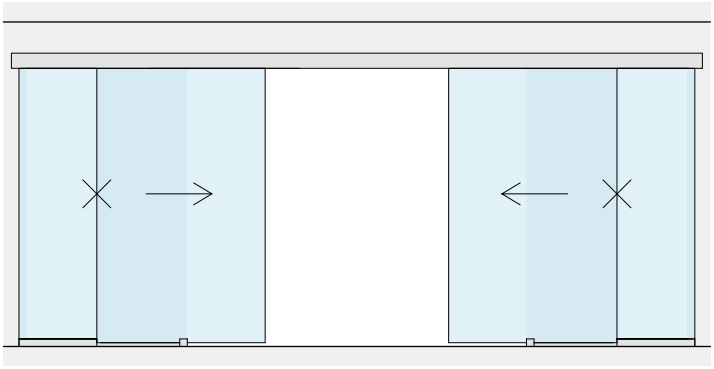

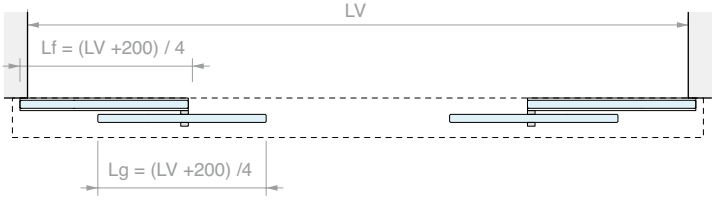
LV
Lf = (LV +200) / 4
Lg = (LV +200) /4

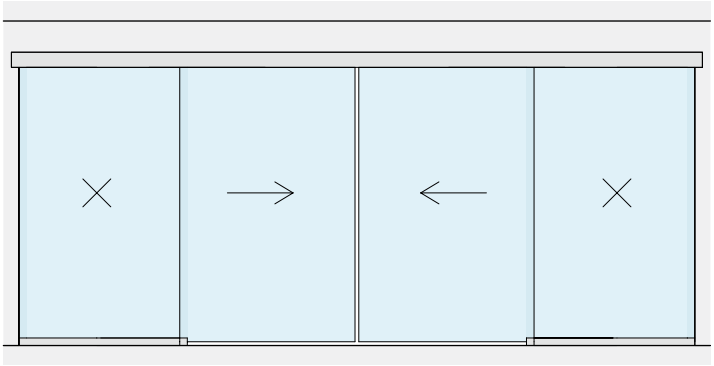

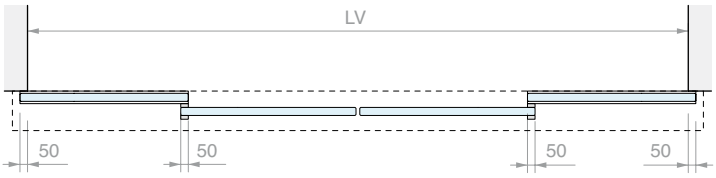
LV
50
50
50
50

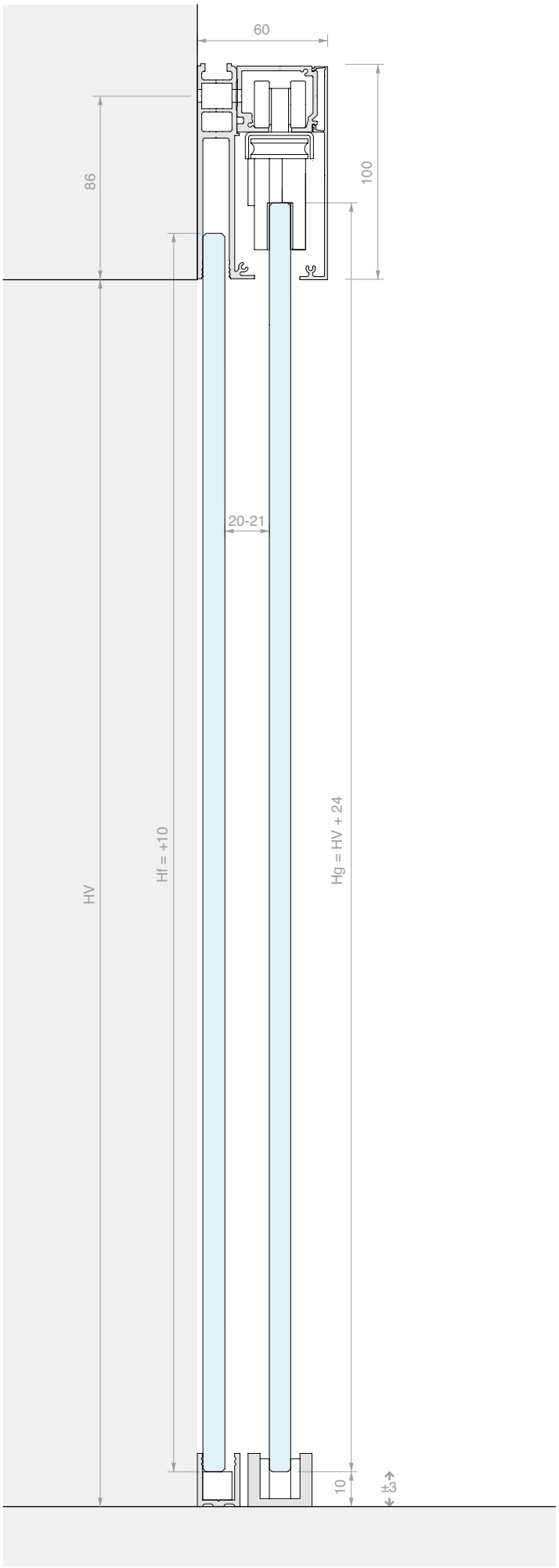
60
86
100
20-21
HV
Hf = +10
Hg = HV + 24
10
±3

CEILING FIXING TRACK

Material: Aluminium

Finish: /6 /88 /97

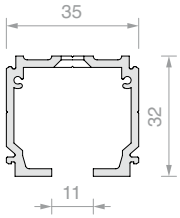

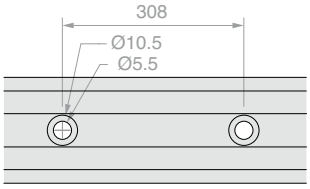

Art.	Length	Qty
LM21.200	**1998** mm	1 Pc
LM21.300	**2998** mm	1 Pc
LM21.400	**3998** mm	1 Pc
LM21.600	**6000** mm	1 Pc

WALL FIXING TRACK

Material: Aluminium

Finish: /6 /88 /97

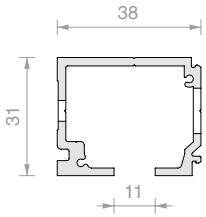

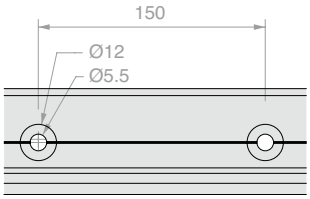

Art.	Length	Qty
LM3110.200	**1998** mm	1 Pc
LM3110.300	**2998** mm	1 Pc
LM3110.400	**3998** mm	1 Pc
LM3110.600	**6000** mm	1 Pc

2-WAY CEILING FIXING TRACK

Material: Aluminium

Finish: /6

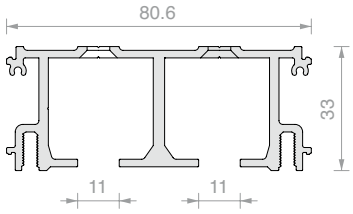

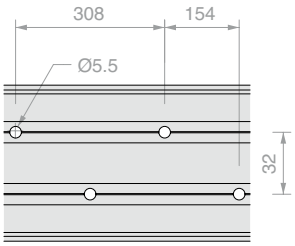

Art.	Length	Qty
LM2V080.200	**1998** mm	1 Pc
LM2V080.300	**2998** mm	1 Pc
LM2V080.400	**3998** mm	1 Pc
LM2V080.600	**6000** mm	1 Pc

3-WAY CEILING FIXING TRACK

Material: Aluminium

Finish: /6

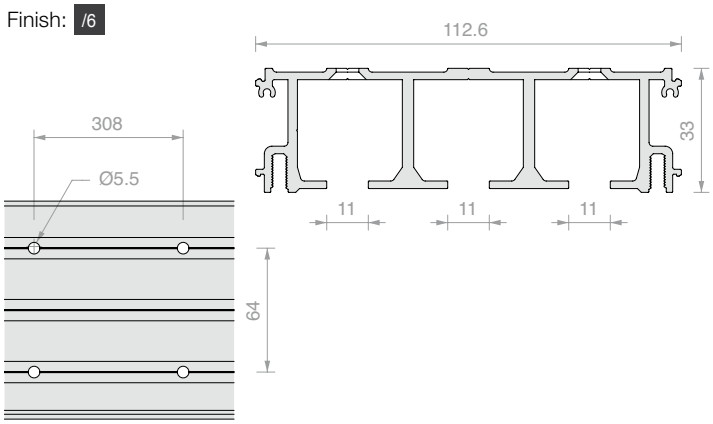

Art.	Length	Qty
LM3V112.200	**1998** mm	1 Pc
LM3V112.300	**2998** mm	1 Pc
LM3V112.400	**3998** mm	1 Pc
LM3V112.600	**6000** mm	1 Pc

FIXED GLASS LOW PROFILE

Material: Aluminium

Finish: /6 /88 /97

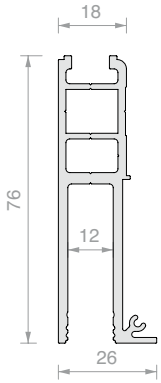

Art.	Length	Qty
LM26075.200	**1998** mm	1 Pc
LM26075.300	**2998** mm	1 Pc
LM26075.400	**3998** mm	1 Pc
LM26075.600	**6000** mm	1 Pc

FIXED GLASS HIGH PROFILE

Material: Aluminium

Finish: /6 /88 /97

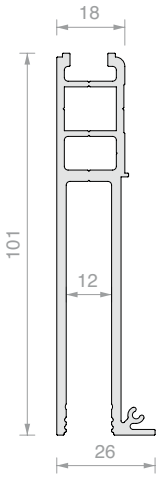

Art.	Length	Qty
LM26100.200	**1998** mm	1 Pc
LM26100.300	**2998** mm	1 Pc
LM26100.400	**3998** mm	1 Pc
LM26100.600	**6000** mm	1 Pc

COVER FOR VISIBLE CLAMPS

Material: Aluminium

Finish: /6 /88 /97

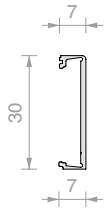

Art.	Length	Qty
LM3120.200	**1998** mm	1 Pc
LM3120.300	**2998** mm	1 Pc
LM3120.400	**3998** mm	1 Pc
LM3120.600	**6000** mm	1 Pc

LOW COVER

Material: Aluminium

Finish: /6 /88 /97

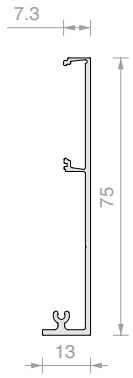

Art.	Length	Qty
LM0075C.200	**1998** mm	1 Pc
LM0075C.300	**2998** mm	1 Pc
LM0075C.400	**3998** mm	1 Pc
LM0075C.600	**6000** mm	1 Pc

HIGH COVER

Material: Aluminium

Finish: /6 /88 /97

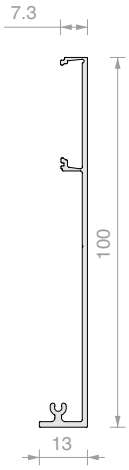

Art.	Length	Qty
LM0100C.200	**1998** mm	1 Pc
LM0100C.300	**2998** mm	1 Pc
LM0100C.400	**3998** mm	1 Pc
LM0100C.600	**6000** mm	1 Pc

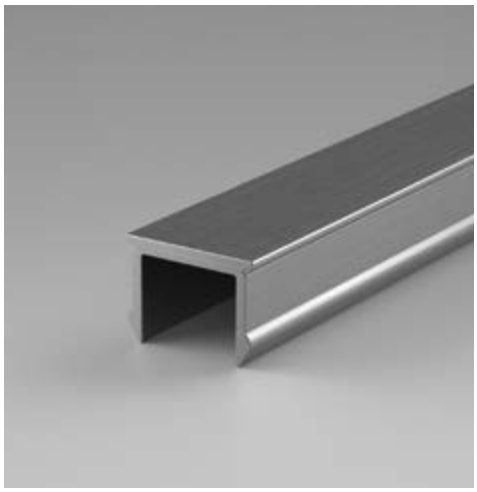

FINISHING PROFILE

Material: Aluminium

Finish: /6 /88 /97

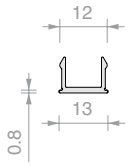

Art.	Length	Qty
LMC13.100	**996** mm	1 Pc
LMC13.150	**1498** mm	1 Pc
LMC13.200	**1998** mm	1 Pc
LMC13.300	**3000** mm	1 Pc

U PROFILE

Material: Aluminium

Finish: /6 /88 /91 /97

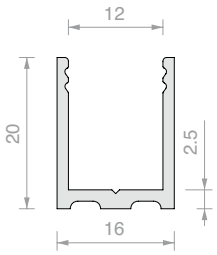

Art.	Length	Qty
LMU20.100	**996** mm	1 Pc
LMU20.150	**1498** mm	1 Pc
LMU20.300	**3000** mm	1 Pc

FINISHING CAP

Material: Aluminium

Finish: /88 /91 /97 /R2

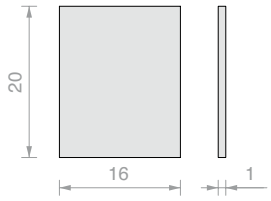

Art.	Qty
LMU20TP	1 Pc

GLASS HOLDER SEAL

Material: PVC

Art.	Thickness	Colour	Qty
GTUP2	**2** mm	Transparent	1 m
GTUP3	**3** mm	Transparent	1 m
GTUP4	**4** mm	Transparent	1 m
GTUP5	**5** mm	Transparent	1 m
GTUP6	**6** mm	Transparent	1 m

Art.	Thickness	Colour	Qty
GTUP2G	**2** mm	Embossed	1 m
GTUP3G	**3** mm	Embossed	1 m
GTUP4G	**4** mm	Embossed	1 m
GTUP5G	**5** mm	Embossed	1 m
GTUP6G	**6** mm	Embossed	1 m

Art.	Thickness	Colour	Qty
GTUP2N	**2** mm	Black	1 m
GTUP3N	**3** mm	Black	1 m
GTUP4N	**4** mm	Black	1 m
GTUP5N	**5** mm	Black	1 m
GTUP6N	**6** mm	Black	1 m

FINISHING CAP 2 SCREWS

Material: Aluminium

Finish: /6 /88 /97

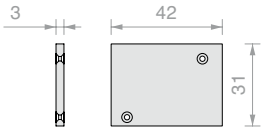

Art.	Qty
LM31042TP32	1 Pc

FINISHING CAP 2 SCREWS

Material: Aluminium

Finish: /6 /88 /97

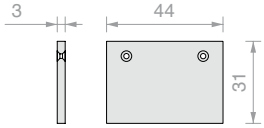

Art.	Qty
LM31044TP32	1 Pc

FINISHING CAP 3 SCREWS

Material: Aluminium

Finish: /6 /88 /97

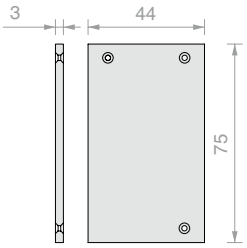

Art.	Qty
LM75044TP33	1 Pc

FINISHING CAP 3 SCREWS

Material: Aluminium

Finish: /6 /88 /97

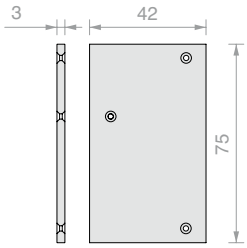

Art.	Qty
LM75042TP33	1 Pc

FINISHING CAP 3 SCREWS

Material: Aluminium

Finish: /6 /88 /97

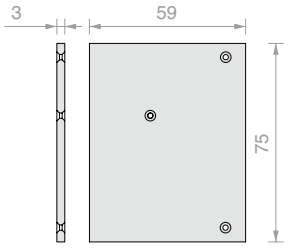

Art.	Qty
LM75059TP33	1 Pc

FINISHING CAP 3 SCREWS

Material: Aluminium

Finish: /6 /88 /97

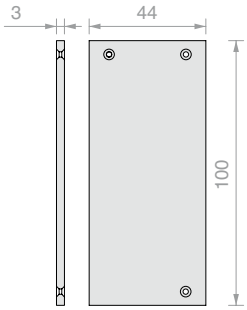

Art.	Qty
LM10044TP33	1 Pc

FINISHING CAP 3 SCREWS

Material: Aluminium

Finish: /6 /88 /97

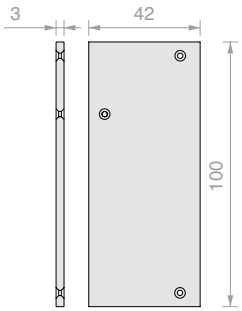

Art.	Qty
LM10042TP33	1 Pc

FINISHING CAP 3 SCREWS

Material: Aluminium

Finish: /6 /88 /97

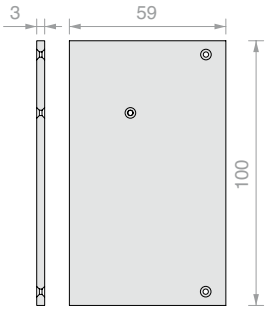

Art.	Qty
LM10059TP33	1 Pc

FINISHING CAP 3 SCREWS

Material: Aluminium

Finish: /6 /88 /97

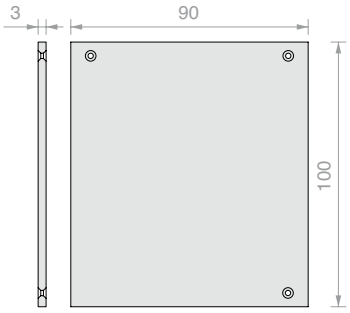

Art.	Qty
LM10090TP33	1 Pc

FINISHING CAP 3 SCREWS

Material: Aluminium

Finish: /6 /88 /97

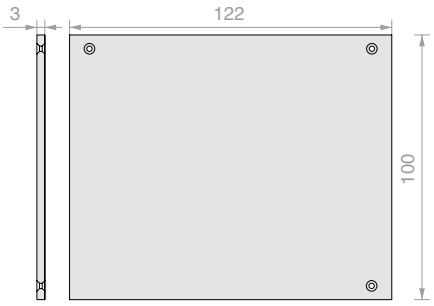

Art.	Qty
LM10022TP33	1 Pc

ROLLER WITH SCREW AND NUT

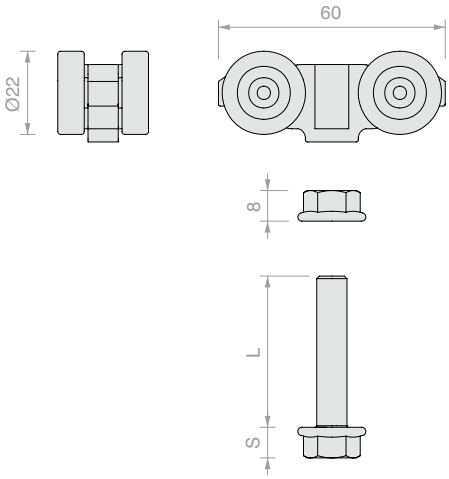

Art.	L	S	For clamps	Qty
CARVIT8X50-A2	**50** mm	**8** mm	CERPOS514	1 Pc
CARVIT8X40-A2	**40** mm	**8** mm	CERPOS514	1 Pc
057.3114.071	**32** mm	**5** mm	CERPOS170	1 Pc

SOFTBREAK DAMPER

Material: ABS, zamak and steel

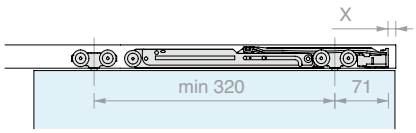

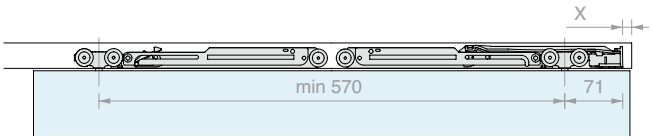

Art.	Load	Qty
042.3102.072	From **20** to **60** kg	1 Pc
042.3102.071	From **61** to **100** kg	1 Pc

CLAMP FOR SLIDING DOORS

Material: Aluminium

Finish: /6 /10 /88 /97

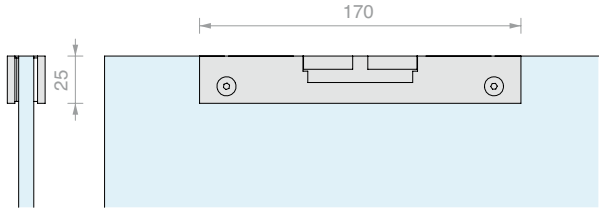

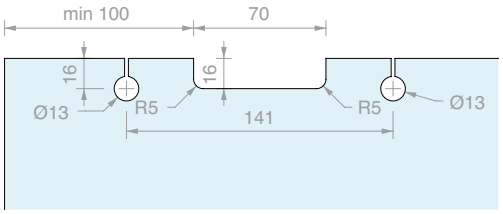

Art.	For glass	Qty
CERPOS170ALL	From **8** to **10.8** mm	1 Pc

CLAMP FOR SLIDING DOORS WITH COVER

Material: Aluminium

Finish: /6 /88 /97

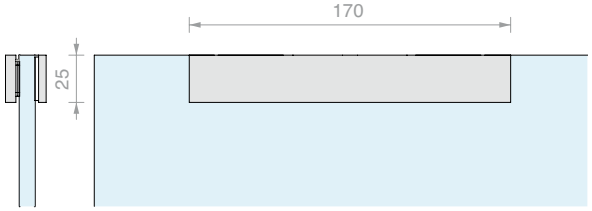

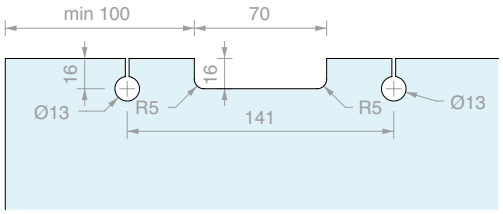

Art.	For glass	Qty
CERPOS170COV	From **8** to **10.8** mm	1 Pc

CLAMP FOR SLIDING DOORS FOR SYNCHRONISATION

Material: Aluminium

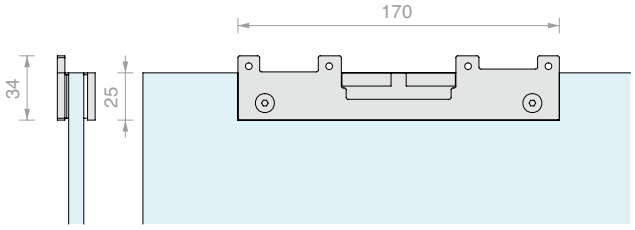

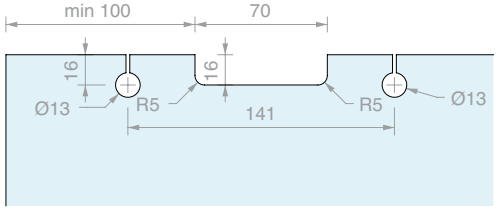

Art.	For glass	Qty
CERPOS170SYNC	From **8** to **10.8** mm	1 Pc

CLAMP FOR SLIDING DOORS

Material: Aluminium

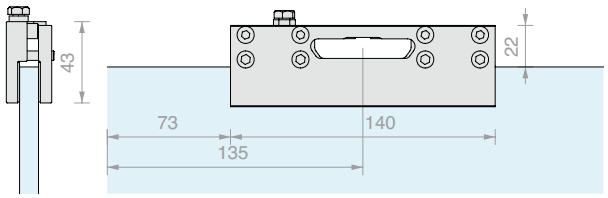

Art.	For glass	Qty
CERPOS514	From **8** to **12.8** mm	1 Pc

CLAMP FOR SLIDING DOORS FOR SIMULTANEOUS SYNCHRONISATION OR DRAGGING MOVEMENT

Material: Aluminium

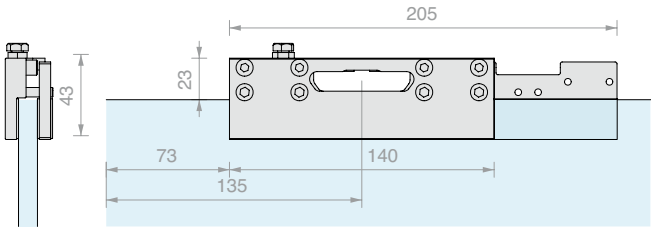

Art.	For glass	Qty
CERPOS514-C	From **8** to **10.8** mm	1 Pc

CLAMP FOR SLIDING DOORS FOR DRAGGING MOVEMENT

Material: Aluminium

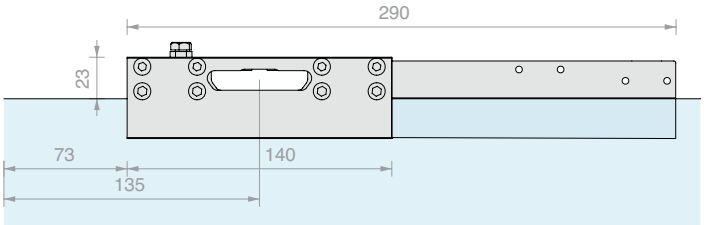

Art.	For glass	Qty
CERPOS514-T	From **8** to **10.8** mm	1 Pc

END STOP WITH BUFFER

Material: ABS

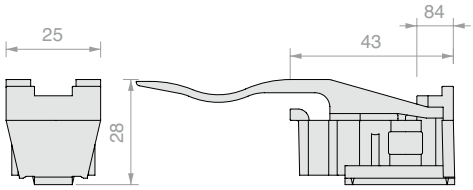

Art.	Q.ty
057.3073.072	1 Pc

END STOP WITHOUT BUFFER

Material: ABS

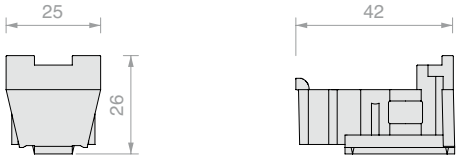

Art.	Q.ty
057.3073.071	1 Pc

GUIDE

Material: Aluminium

Finish: /88 /97 /R2

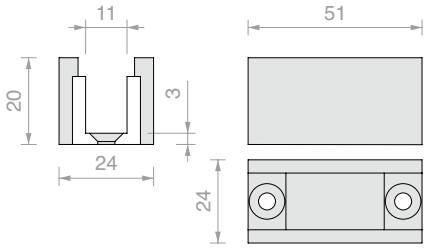

Art.	For glass thickness	Qty
LMGF	From **8** to **10** mm	1 Pc

SYNCHRONISATION KIT FOR 2 DRAGGED DOORS WITH CERPOS514-C-E-T

Finish: /6 /88 /97

Art.	Qty
LMSIN-2AT502	1 Pc

SYNCHRONISATION KIT FOR 3 DRAGGED DOORS WITH CERPOS514-C-E-T

Finish: /6 /88 /97

Art.	Qty
LMSIN-3AT503	1 Pc

SYNCHRONISATION KIT FOR 2 IN-LINE DOORS WITH CERPOS170SYNC

Art.	Qty
LMSIN-2AC170	1 Pc

SYNCHRONISATION KIT FOR 2 IN-LINE DOORS WITH CERPOS514-C

Art.	Qty
LMSIN-2AC500	1 Pc

Forme

Smaller profiles for finishing glass door panels.
Applied to the glass with a 0.5 mm thick two-sided tape, silicone or UV bonding.
Select the right guide and accessories for holding the glass and your edging profile.

FLAT PROFILE FORME SERIES

Material: Aluminium

Finish: /6 /88 /97 /RAL

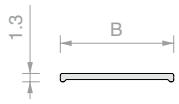

Art.	B	Length	Qty
FOP10.30	**10** mm	**3000** mm	1 Pc
FOP15.30	**15** mm	**3000** mm	1 Pc
FOP20.30	**20** mm	**3000** mm	1 Pc

U PROFILE, FORME SERIES

Material: Aluminium

Finish: /6 /88 /97 /RAL

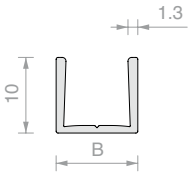

Art.	B	Length	For glass	Qty
FOU1011.30	**10.8** mm	**3000** mm	**8** mm	1 Pc
FOU1013.30	**12.8** mm	**3000** mm	**10** mm	1 Pc

TESA® ACX^{plus} DOUBLE-SIDED TAPE

Transparent double-sided tape for fixing glass, steel and aluminium.

The paper liner makes manual application of the tape easier.

Art.	Dimensions	Thickness	Qty
TS250065	**6** mm x **25** m	**0.5** mm	1 Pc
TS250125	**12** mm x **25** m	**0.5** mm	1 Pc
TS250155	**15** mm x **25** m	**0.5** mm	1 Pc

FLOOR GUIDE

Material: Aluminium

Finish: /88 /97 /R2

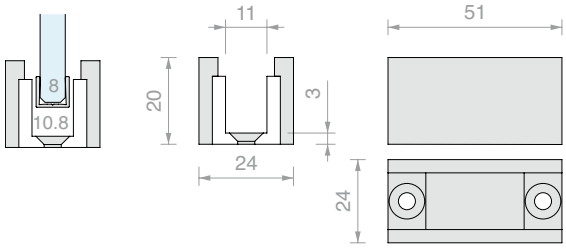

Art.	For profile	Qty
LMGF	FOU1011	1 Pc

ADAPTOR FOR GUIDE LMGF

Accessory for inserting into the LMGF floor guide

Material: plastic

Finish: /56

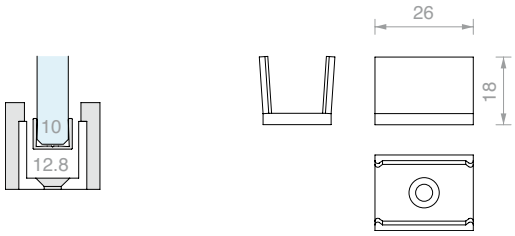

Art.	For profile	Qty
LMGF13-POM	FOU1013	1 Pc

LM INVISIBLE

Design

The LM INVISIBLE collection is a family of sliding doors which ensures that the glass is the only visible part of the sliding door.

The perfectly flush fitting ceiling fixing tracks fit in perfectly in any architectural setting, combining functionality and design.

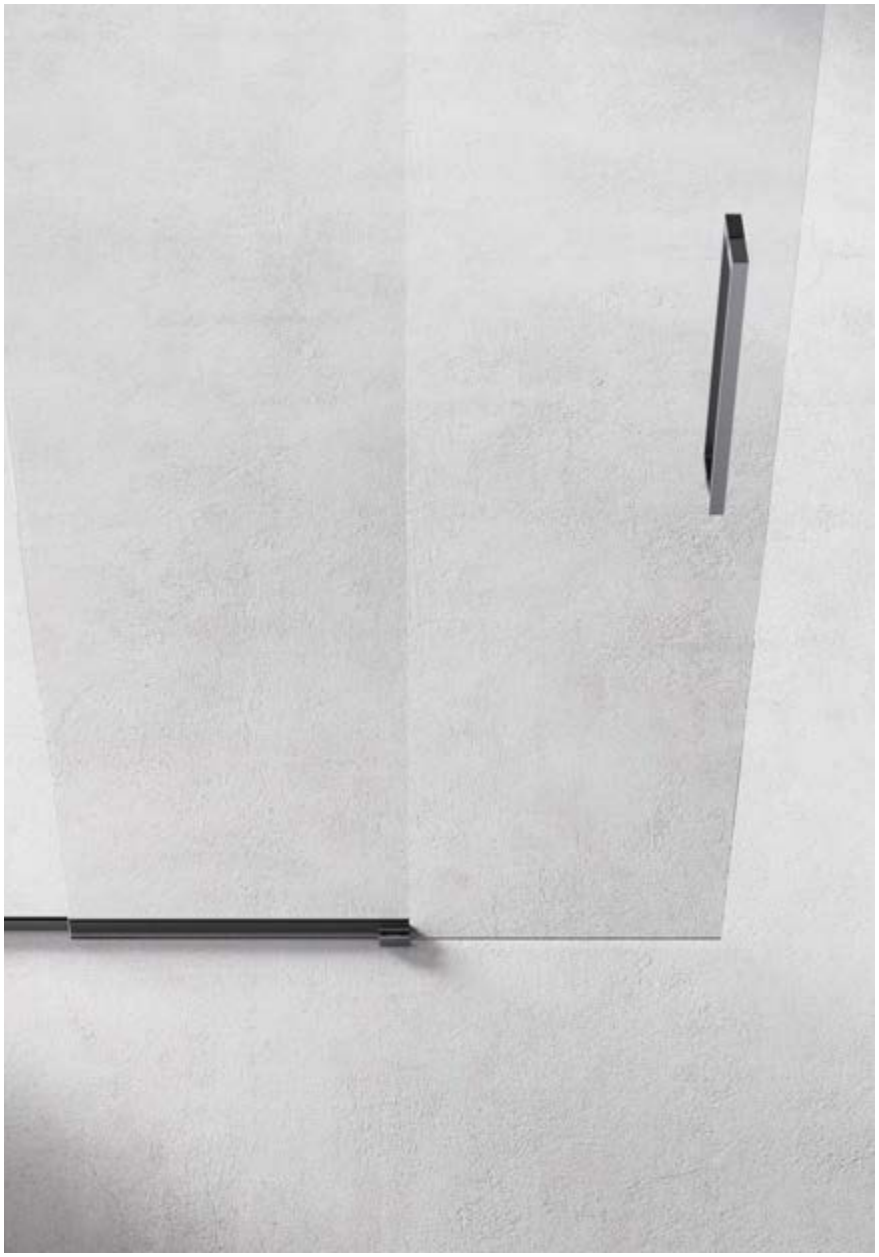

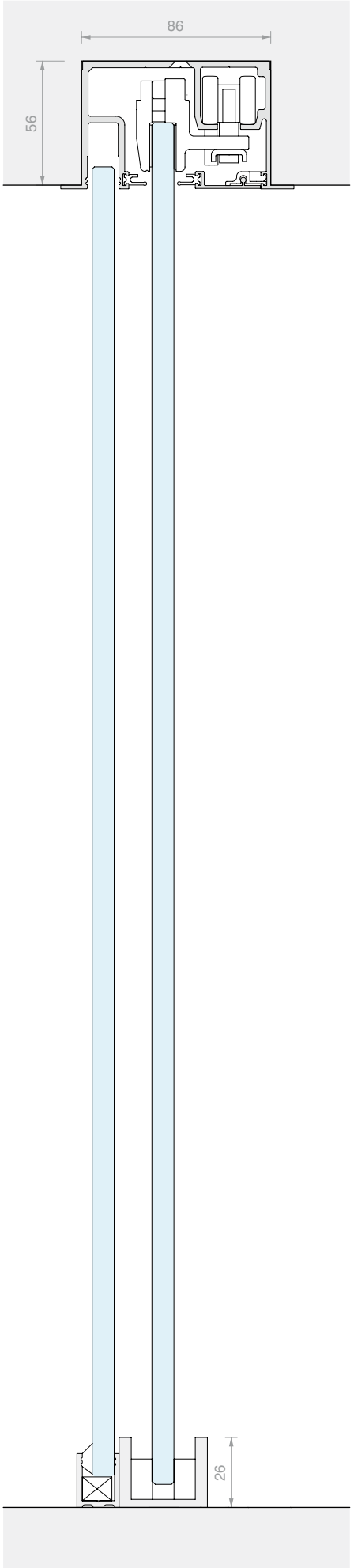

/88
Brushed steel effect aluminium

/97
Matt aluminium

LM INVISIBLE

Technical properties

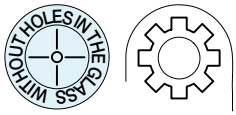

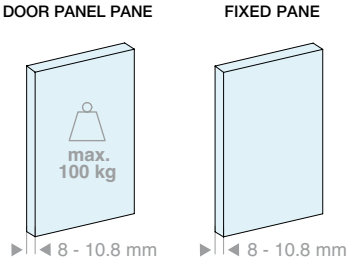

2 types of installation

Ceiling

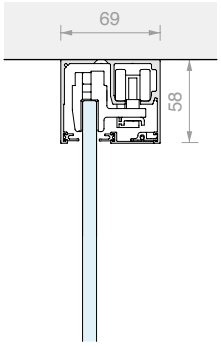

1 way

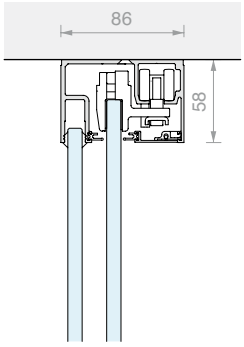

1 way + fixed

Ceiling, flush fit

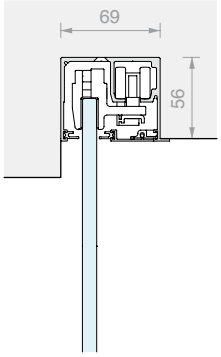

1 way

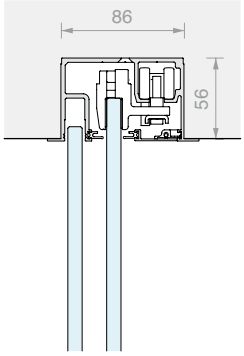

1 way + fixed

2 types of upper layout

Exposed profile

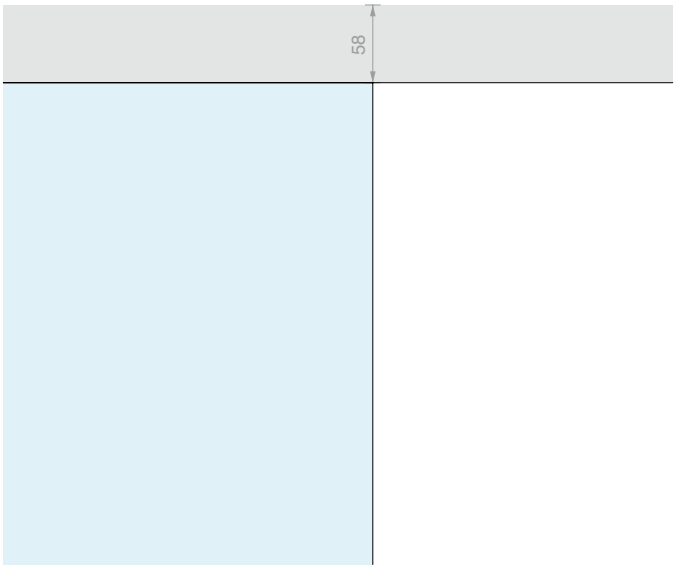

Flush fit profile

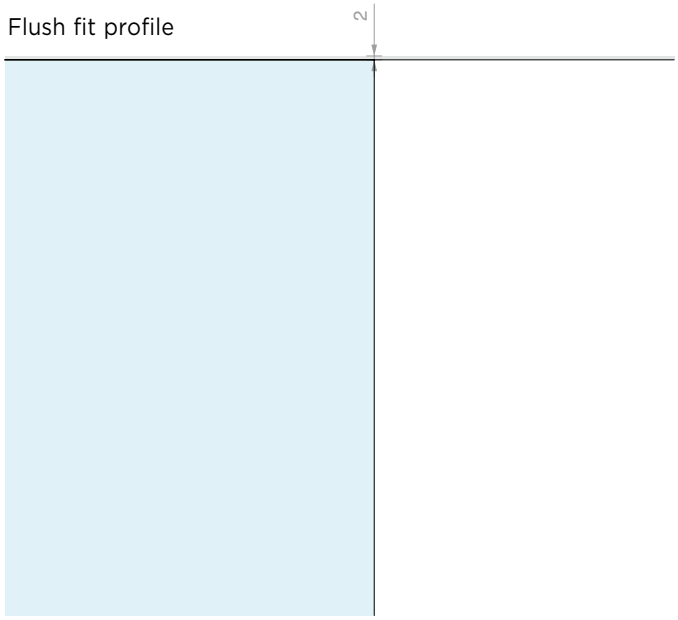

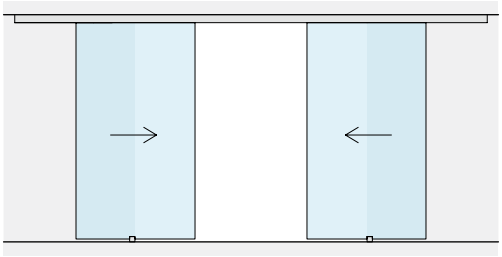

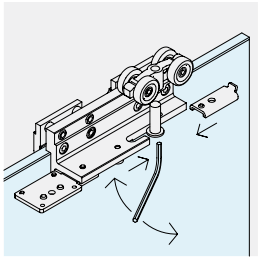

DOOR PANEL ADJUSTMENT
The height of the individual roller can be adjusted to change the position of the panel by ± 3 mm.

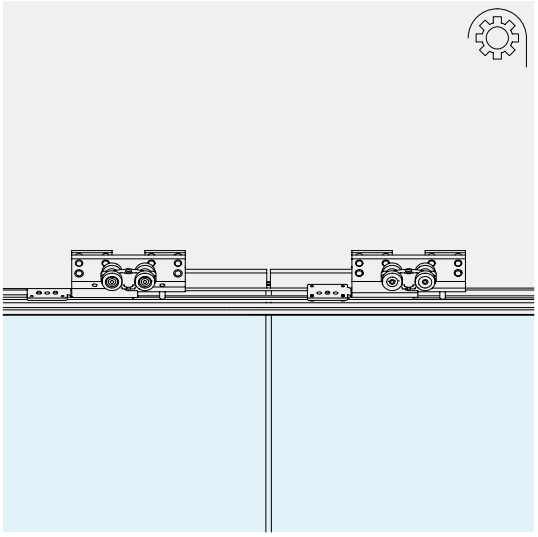

SYNCHRONISM
The following accessories are available for synchronisation simultaneous with 2 moving door panels.

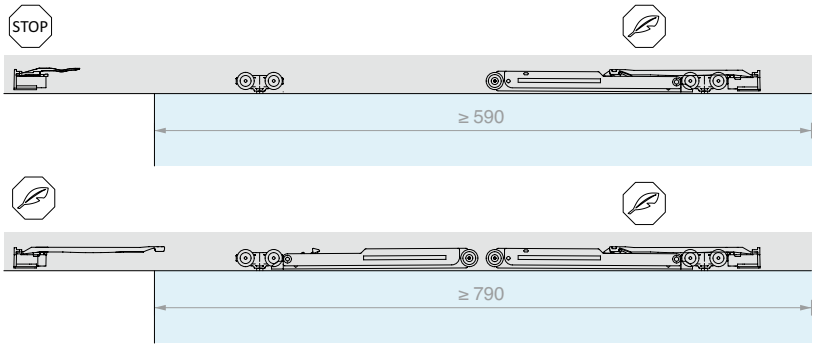

SOFT CLOSE
The use of a single damper delivers delicate and controlled opening and closing.

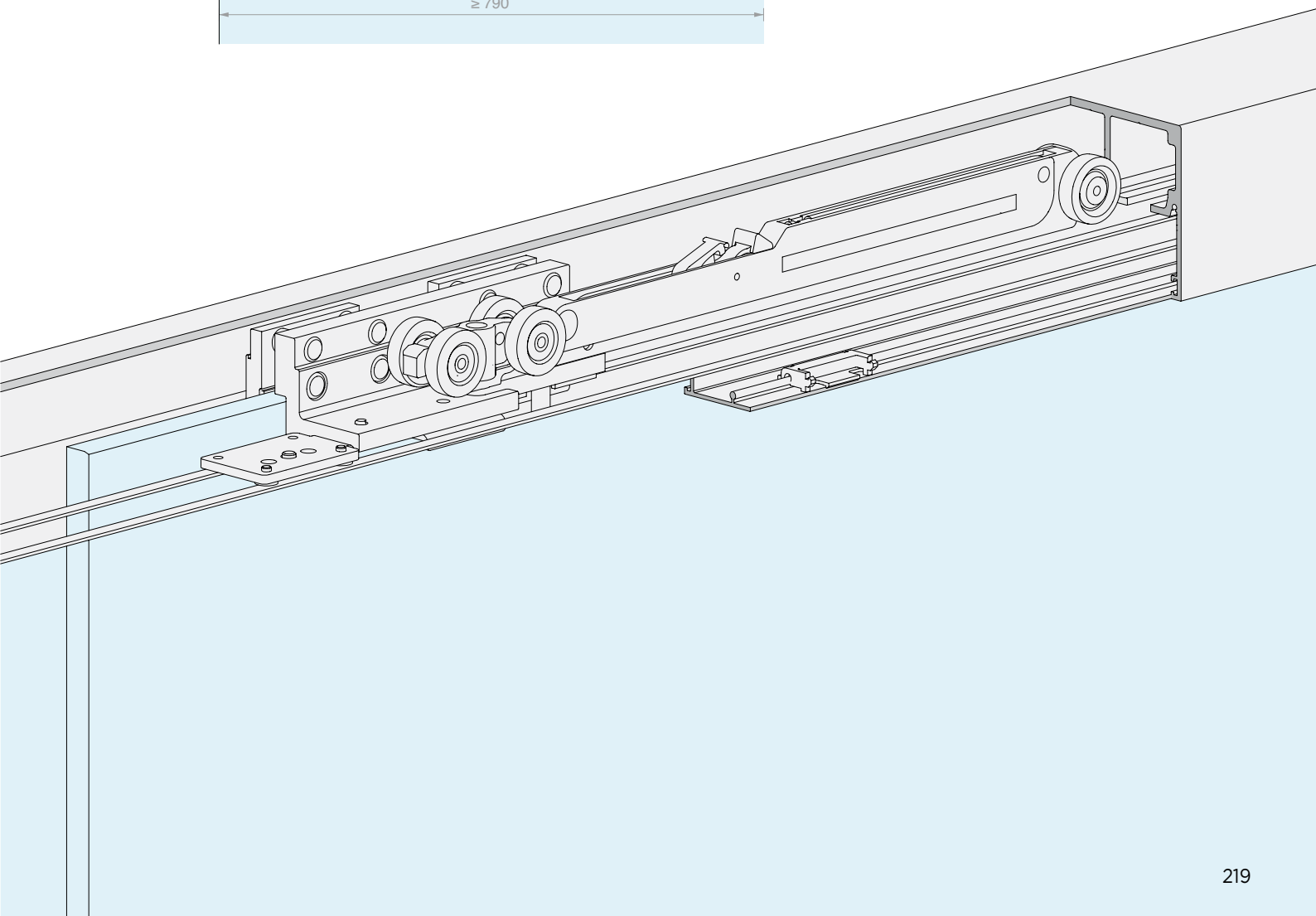

LM INVISIBLE

Kit

CEILING FIXING

MOVING DOORS

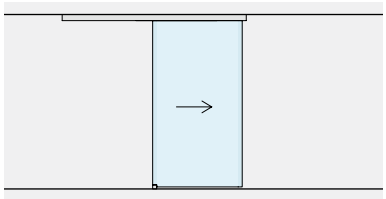

Page 224

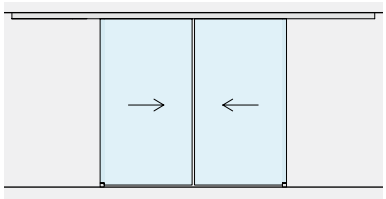

Page 228

MOVING DOORS
WITH FIXED GLASS

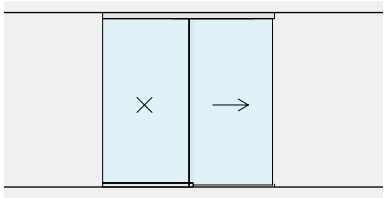

Page 232

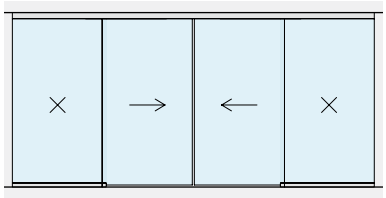

Page 236

FLUSH FIT CEILING FIXING

MOVING DOORS

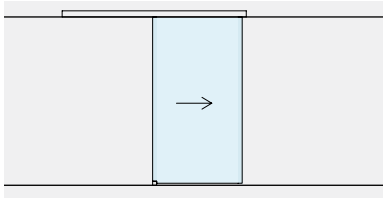

Page 240

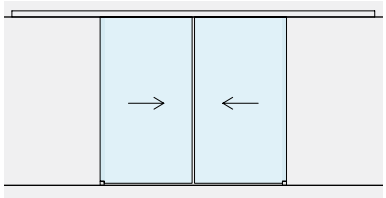

Page 244

MOVING DOORS
WITH FIXED GLASS

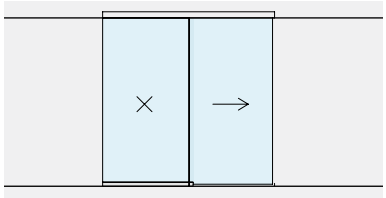

Page 248

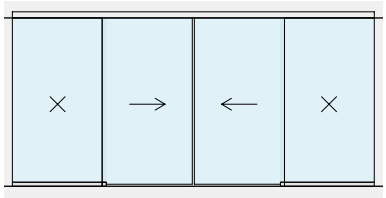

Page 252

SLIDING DOOR KIT, CEILING FIXING SINGLE DOOR

Material: Aluminium
Finish: /88 /97

WITHOUT HOLES IN THE GLASS

DOOR OPENING SIZE

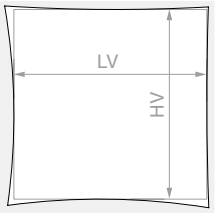

HV max: **2730** mm

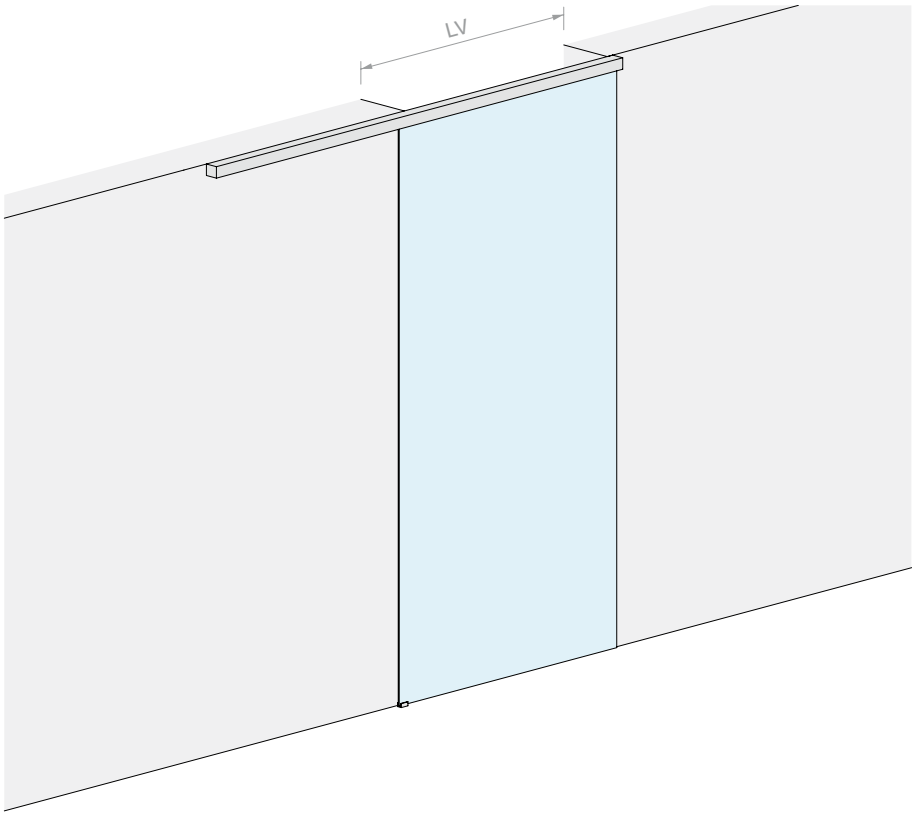

DOOR PANEL PANE

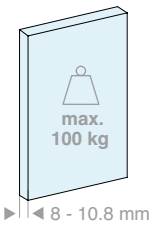

DOOR PANEL PANE

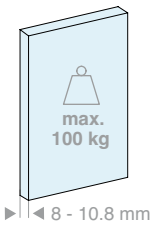

Kit comprising:

Art.	Description	Qty
LMGW	Set of accessories for a door	1 Pc
LMGWSB200	Ceiling fixing track	1 Pc
057.3085.200	Lower cover	1 Pc
LMGWST01	Pair of end caps	1 Pc
057.3078.002	Finishing gasket	4 m
Optional		
042.3102.072	Softbreak damper, 20-60 kg	1 Pc
042.3102.071	Softbreak damper, 61-100 kg	1 Pc

Kit comprising:

Art.	Description	Qty
LMGW	Set of accessories for a door	1 Pc
LMGWSB300	Ceiling fixing track	1 Pc
057.3085.300	Lower cover	1 Pc
LMGWST01	Pair of end caps	1 Pc
057.3078.002	Finishing gasket	6 m
Optional		
042.3102.072	Softbreak damper, 20-60 kg	1 Pc
042.3102.071	Softbreak damper, 61-100 kg	1 Pc

Art.	LV max	Qty
LMGWS200	**920** mm	1 Pc

Art.	LV max	Qty
LMGWS300	**1420** mm	1 Pc

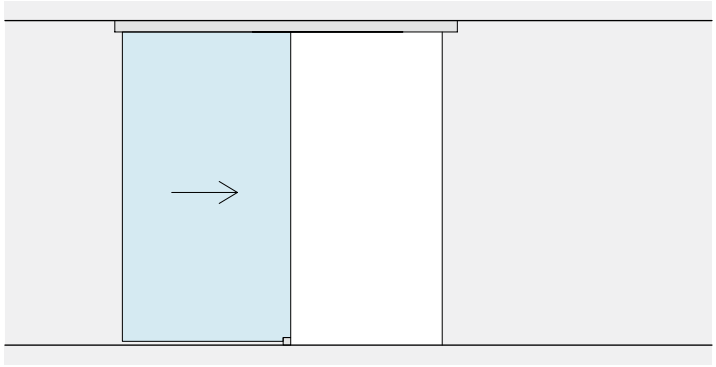

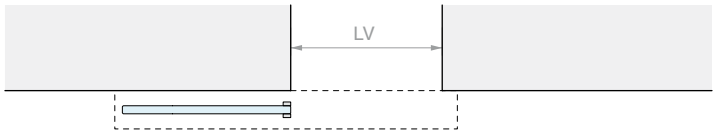
LV

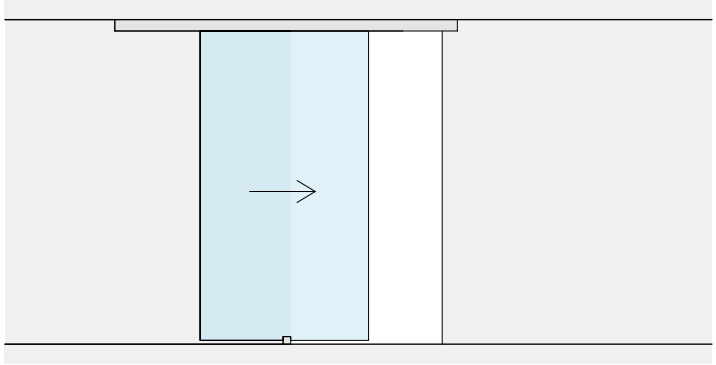

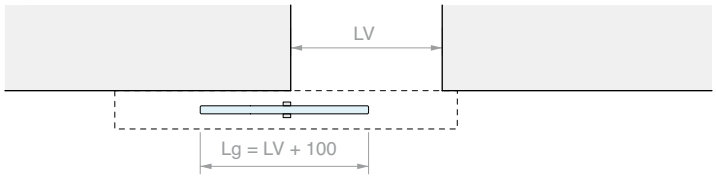
LV
Lg = LV + 100

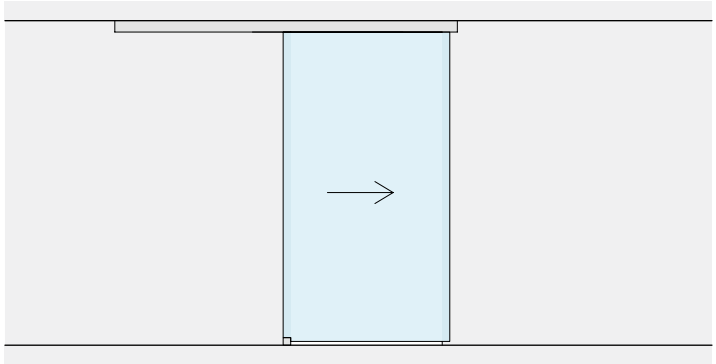

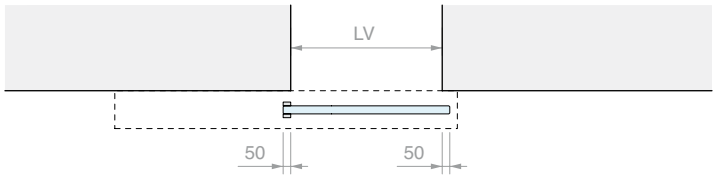
LV
50
50

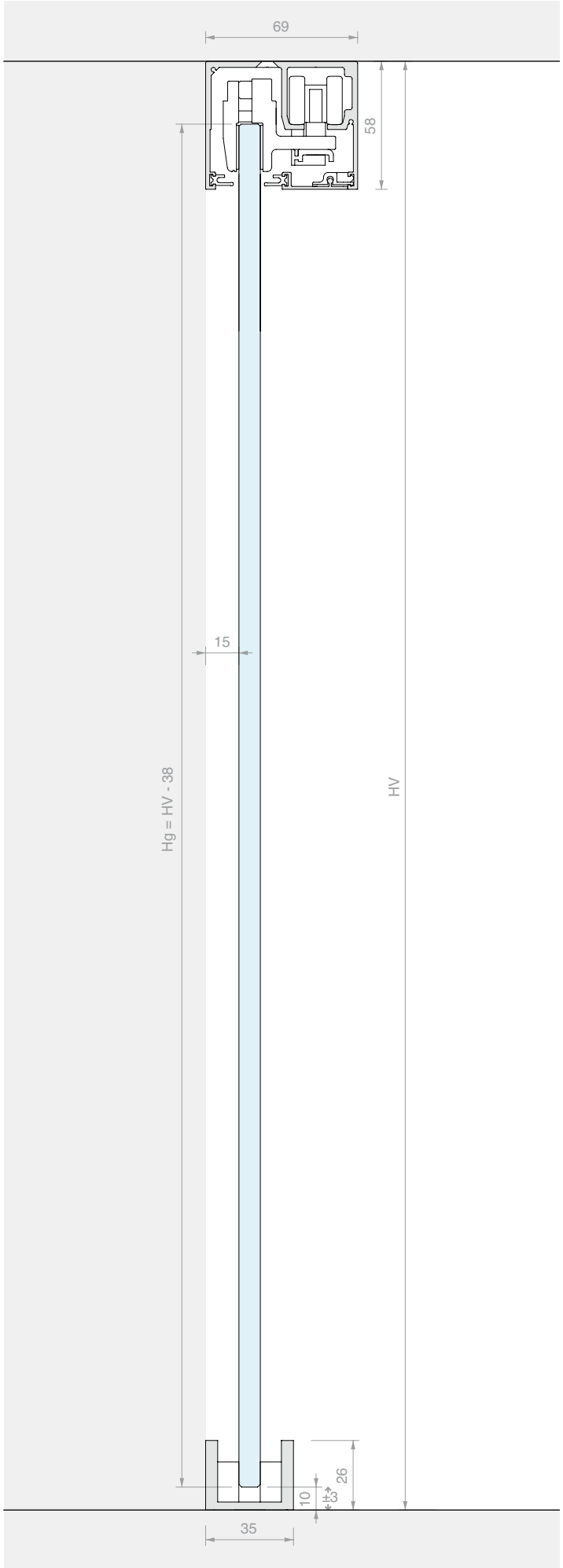
69
58
15
Hg = HV - 38
HV
26
10
±3
35

SLIDING DOOR KIT, CEILING FIXING DOUBLE DOOR

Material: Aluminium
Finish: /88 /97

WITHOUT HOLES IN THE GLASS

DOOR OPENING SIZE

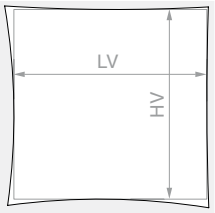

HV max: **2730** mm

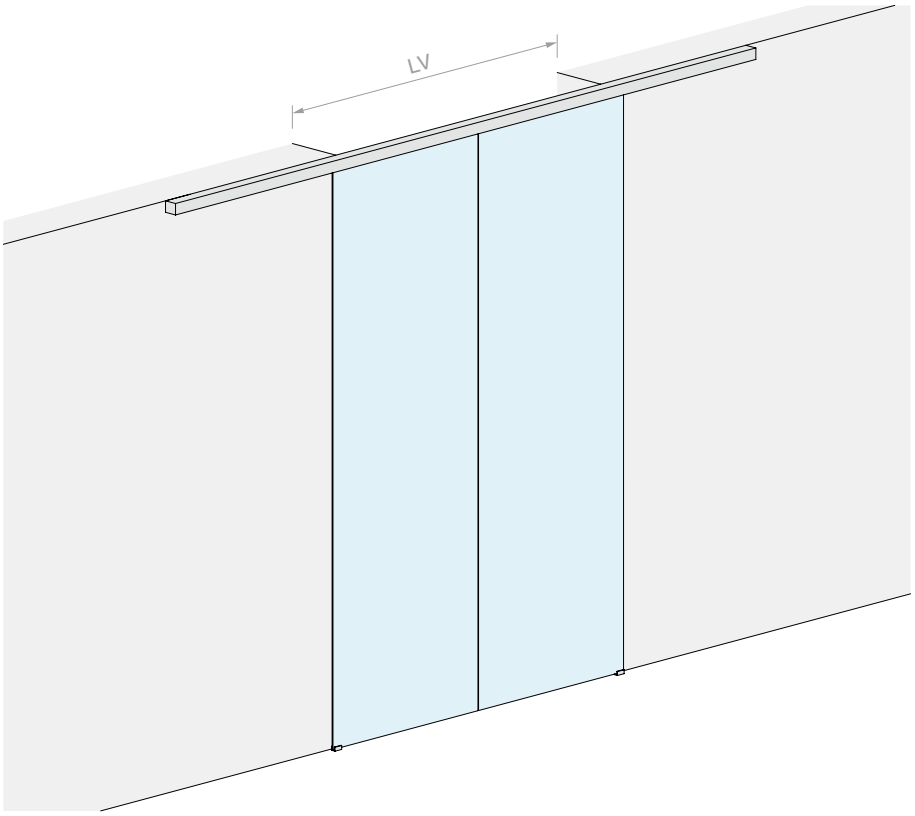

DOOR PANEL PANE

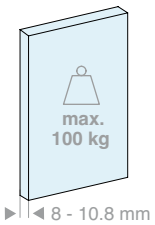

Kit comprising:

Art.	Description	Qty
LMGW	Set of accessories for a door	2 Pcs
LMGWSB400	Ceiling fixing track	1 Pc
057.3085.400	Lower cover	1 Pc
LMGWST01	Pair of end caps	1 Pc
057.3078.002	Finishing gasket	8 m

Optional

042.3102.072	Softbreak damper, 20-60 kg	1 Pc
042.3102.071	Softbreak damper, 61-100 kg	1 Pc
LMSINCRO	Synchronisation kit	1 Pc

Art.	LV max	Qty
LMGWS400	**1940** mm	1 Pc

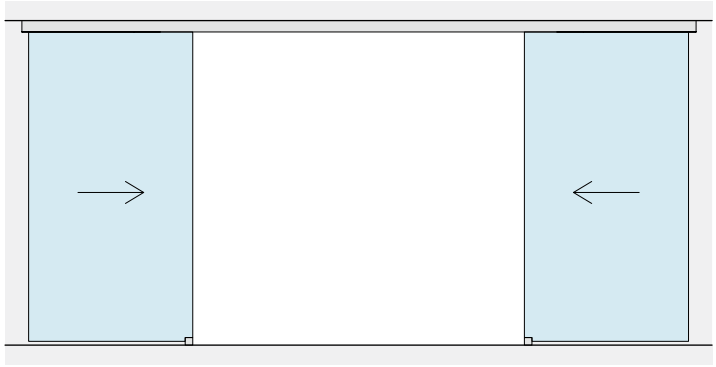

LV

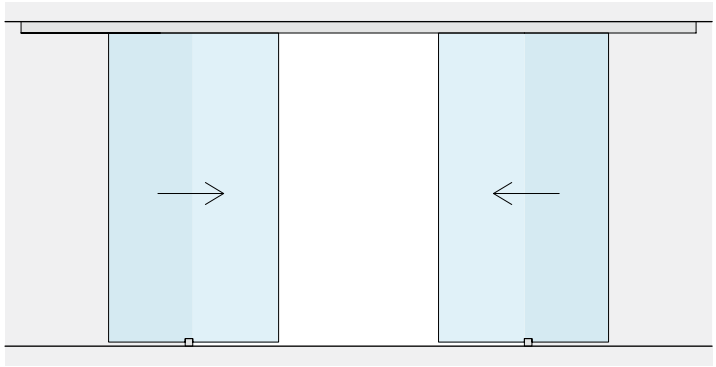

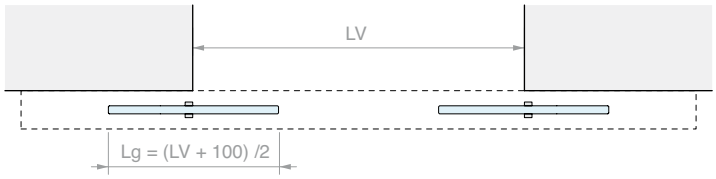
LV
Lg = (LV + 100) /2

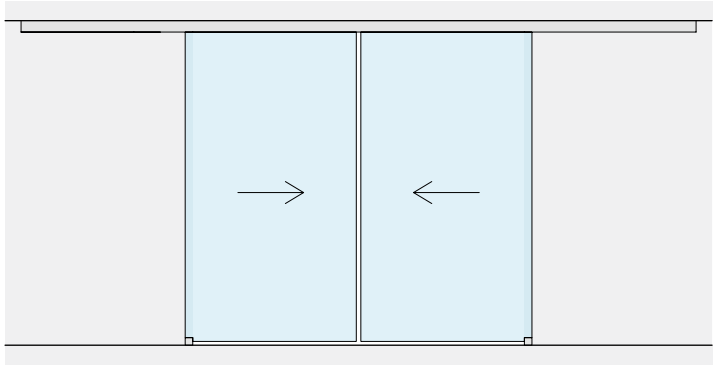

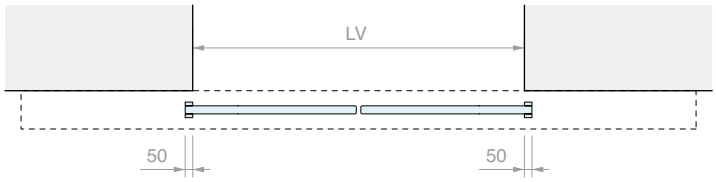
LV
50
50

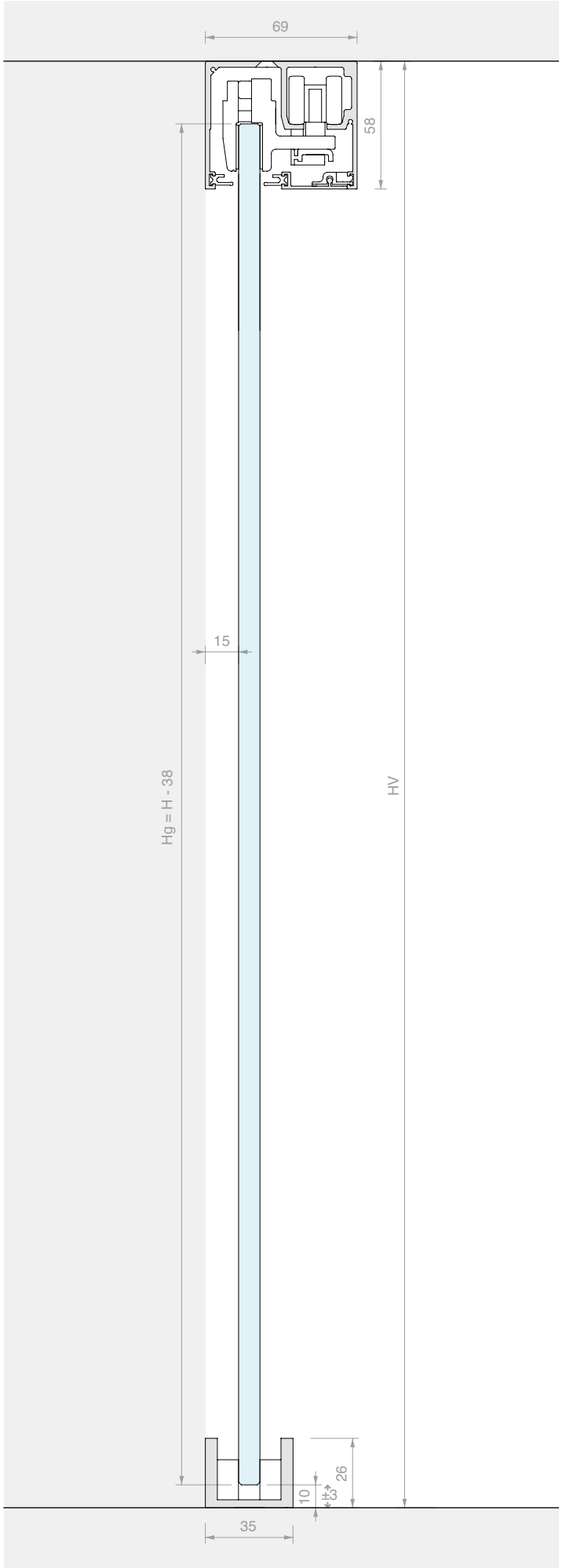
69
58
15
Hg = H - 38
HV
26
10
±3
35

SLIDING DOOR KIT, CEILING FIXING
SINGLE DOOR WITH FIXED GLASS

Material: Aluminium
Finish: /88 /97

DOOR OPENING SIZE

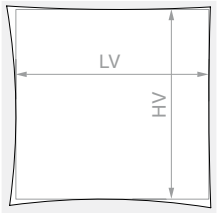

HV max: **2730** mm

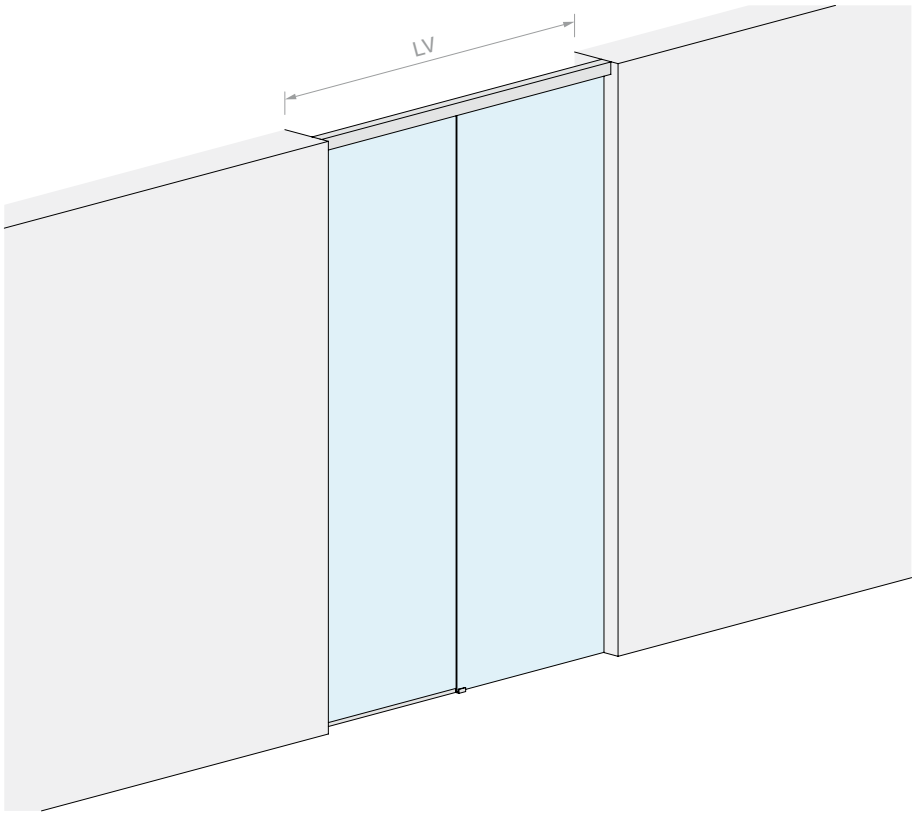

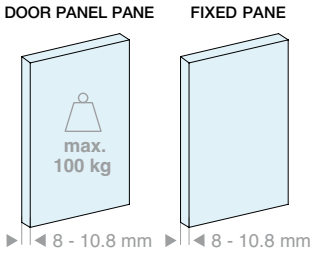

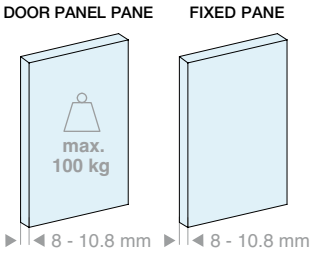

Kit comprising:

Art.	Description	Qty
LMGW	Set of accessories for a door	1 Pc
057.3084.200	Ceiling fixing track	1 Pc
057.3085.200	Lower cover	1 Pc
LMU20.150	U profile	1 Pc
042.3005.100	Finishing profile	1 Pc
LMU20TP	Finishing cap	1 Pc
057.3078.002	Finishing gasket	4 m
GTUP2	Glass holder gasket	5 m
Optional		
042.3102.072	Softbreak damper, 20-60 kg	1 Pc
042.3102.071	Softbreak damper, 61-100 kg	1 Pc
LMU20.300	U profile	1 Pc

Kit comprising:

Art.	Description	Qty
LMGW	Set of accessories for a door	1 Pc
057.3084.300	Ceiling fixing track	1 Pc
057.3085.300	Lower cover	1 Pc
LMU20.300	U profile	1 Pc
042.3005.200	Finishing profile	1 Pc
LMU20TP	Finishing cap	1 Pc
057.3078.002	Finishing gasket	6 m
GTUP2	Glass holder gasket	6 m
Optional		
042.3102.072	Softbreak damper, 20-60 kg	1 Pc
042.3102.071	Softbreak damper, 61-100 kg	1 Pc
LMU20.300	U profile	1 Pc

Art.	LV max	Qty
LMGWF200	**2000** mm	1 Pc

Art.	LV max	Qty
LMGWF300	**3000** mm	1 Pc

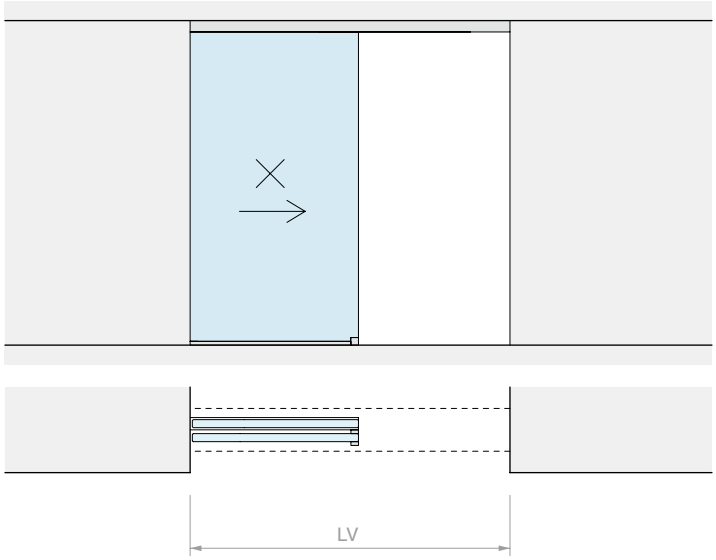
LV

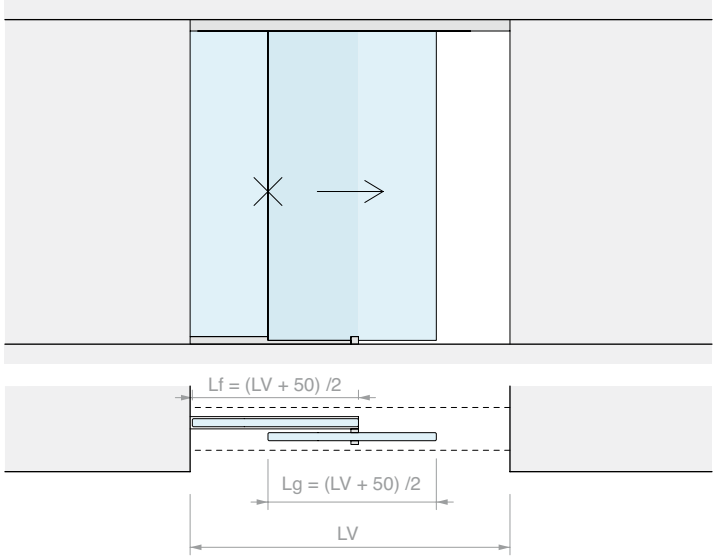
Lf = (LV + 50) /2
Lg = (LV + 50) /2
LV

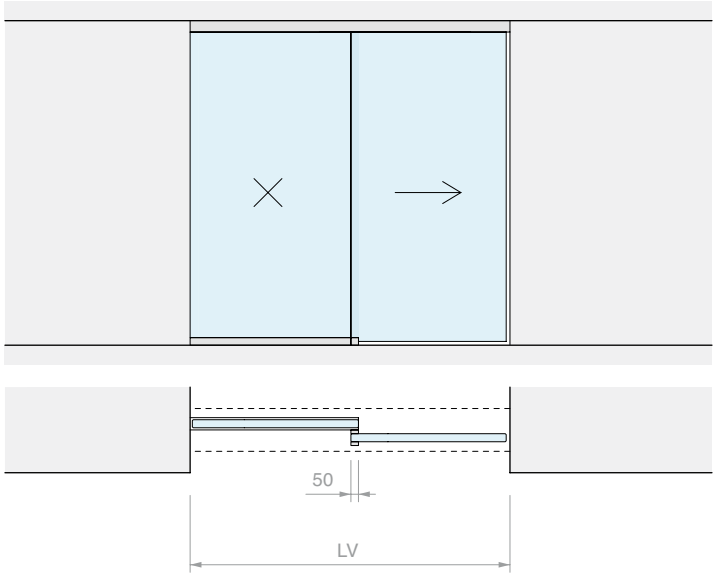
50
LV

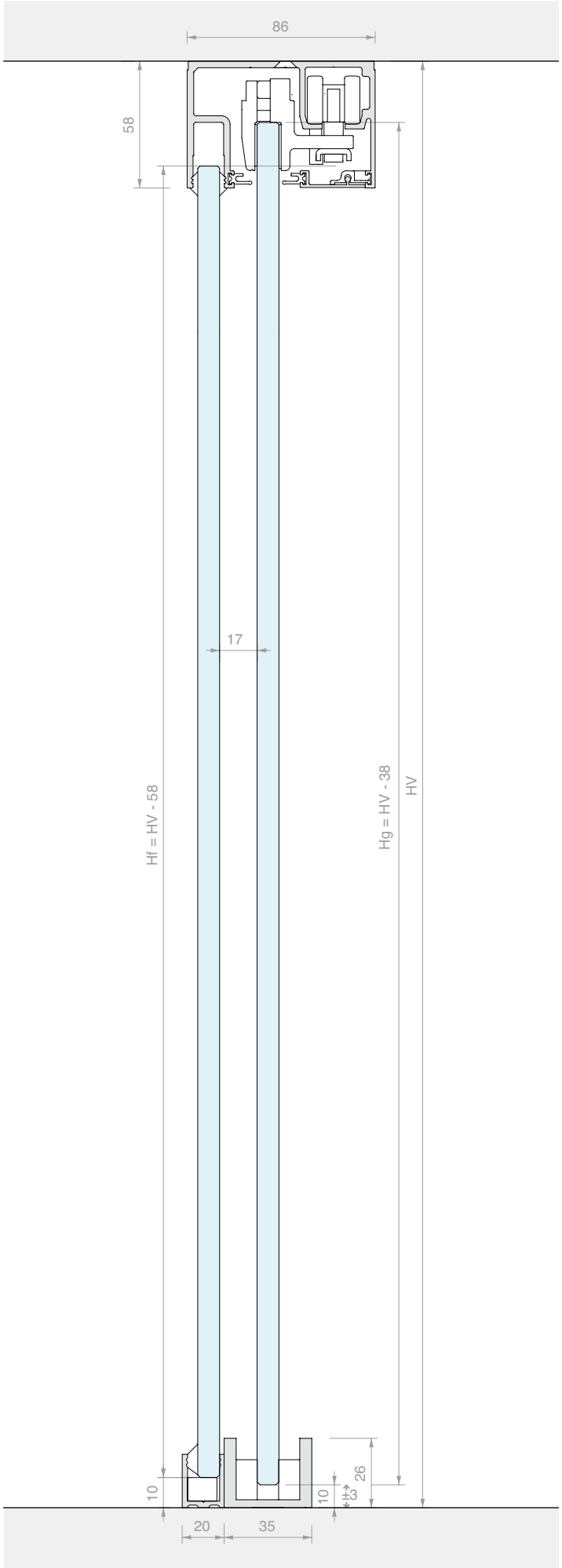
86
58
17
Hf = HV - 58
Hg = HV - 38
HV
10
10
26
±3
20
35

SLIDING DOOR KIT, CEILING FIXING
DOUBLE DOOR WITH DOUBLE FIXED GLASS

Material: Aluminium
Finish: /88 /97

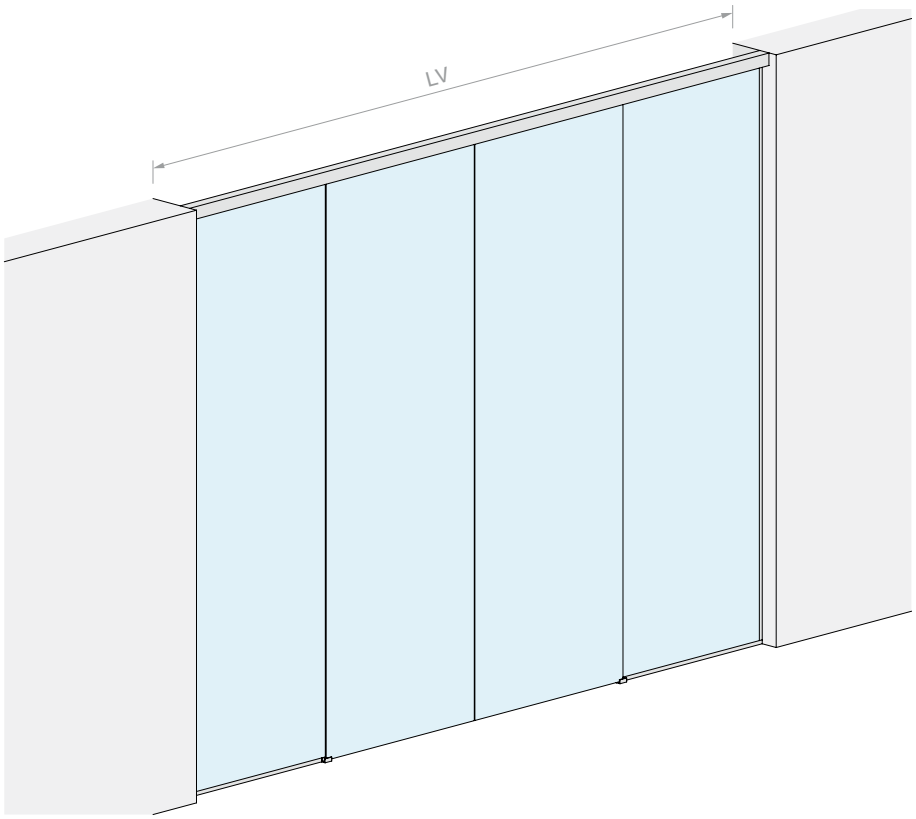

DOOR OPENING SIZE

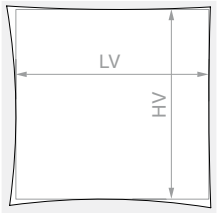

HV max: **2730** mm

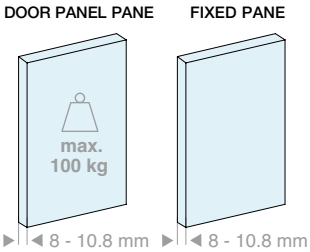

Kit comprising:

Art.	Description	Qty
LMGW	Set of accessories for a door	2 Pcs
057.3084.400	Fixed ceiling fixing track	1 Pc
057.3085.400	Lower cover	1 Pc
LMU20.300	U profile	1 Pc
042.3005.300	Finishing profile	1 Pc
LMU20TP	Finishing cap	2 Pcs
057.3078.002	Finishing gasket	8 m
GTUP2	Glass holder gasket	9 m

Optional

042.3102.072	Softbreak damper, 20-60 kg	1 Pc
042.3102.071	Softbreak damper, 61-100 kg	1 Pc
LMU20.300	U profile	1 Pc
LMSINCRO	Synchronisation kit	1 Pc

Art.	LV max	Qty
LMGWF400	**4000** mm	1 Pc

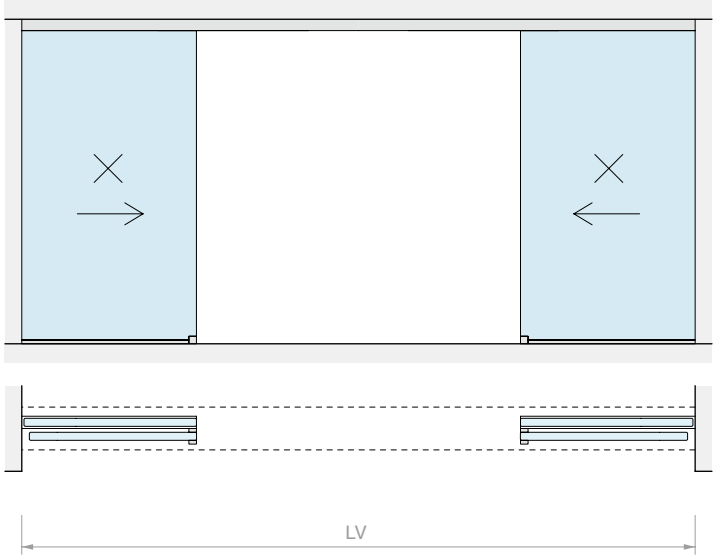
LV

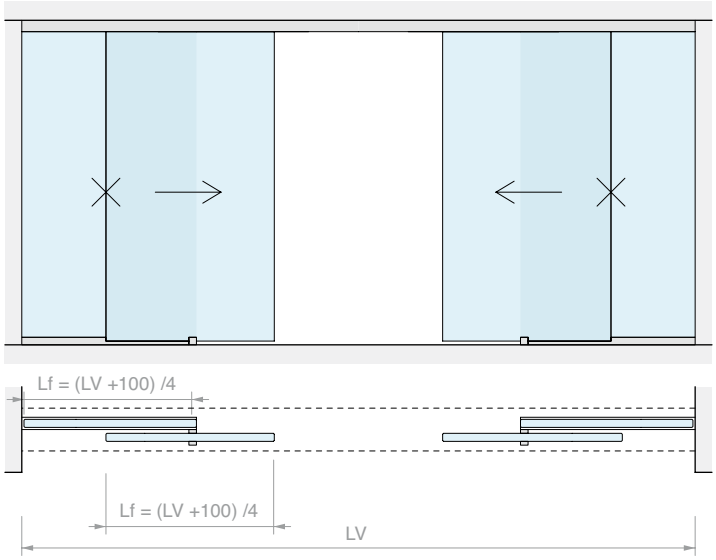
Lf = (LV +100) /4
Lf = (LV +100) /4
LV

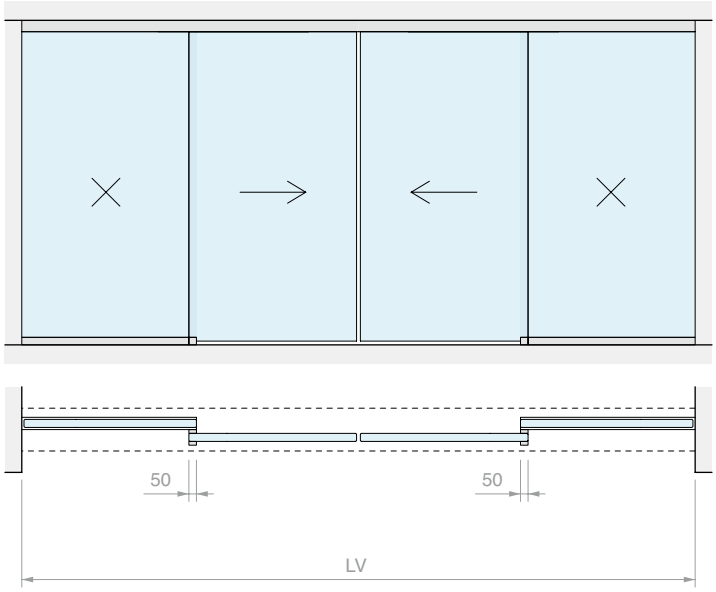
50
50
LV

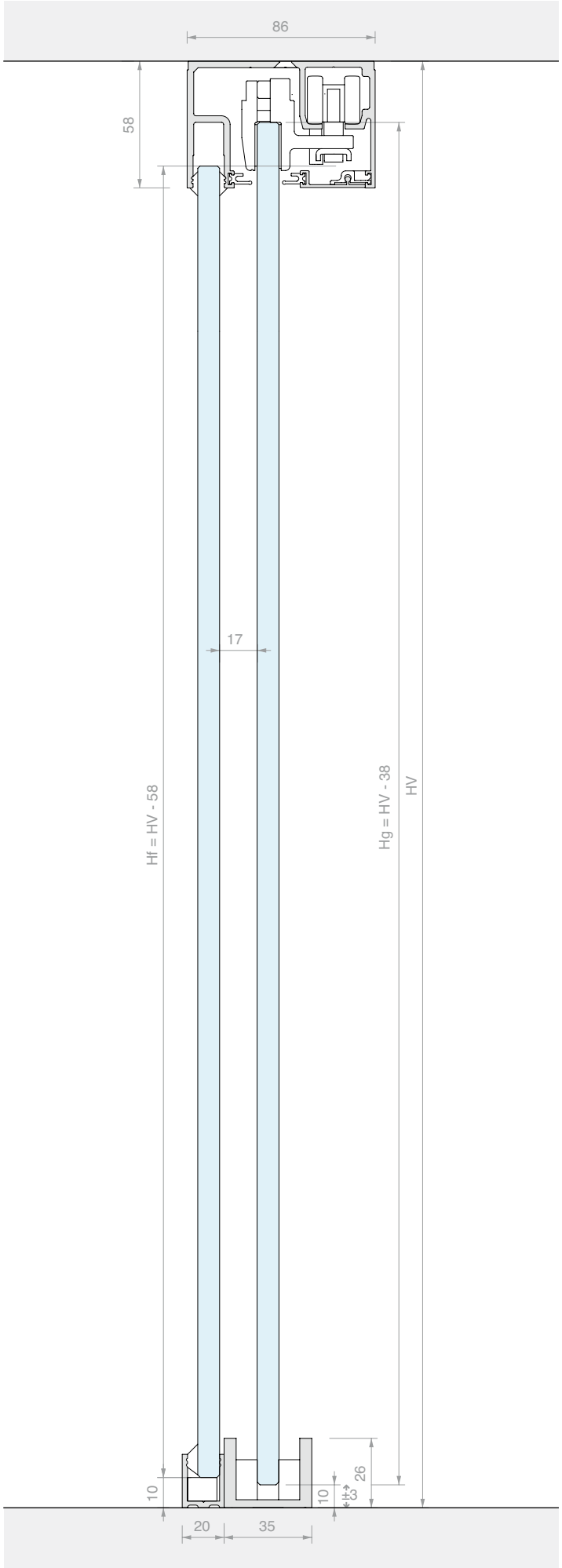
86
58
17
Hf = HV - 58
Hg = HV - 38
HV
10
10
±3
26
20
35

the BOOK

SLIDING DOOR KIT, FLUSH FIT FIXING SINGLE DOOR

Material: Aluminium
Finish: /88 /97

WITHOUT HOLES IN THE GLASS

DOOR OPENING SIZE

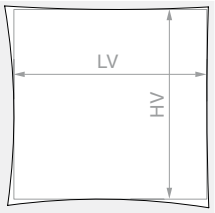

HV max: **2680** mm

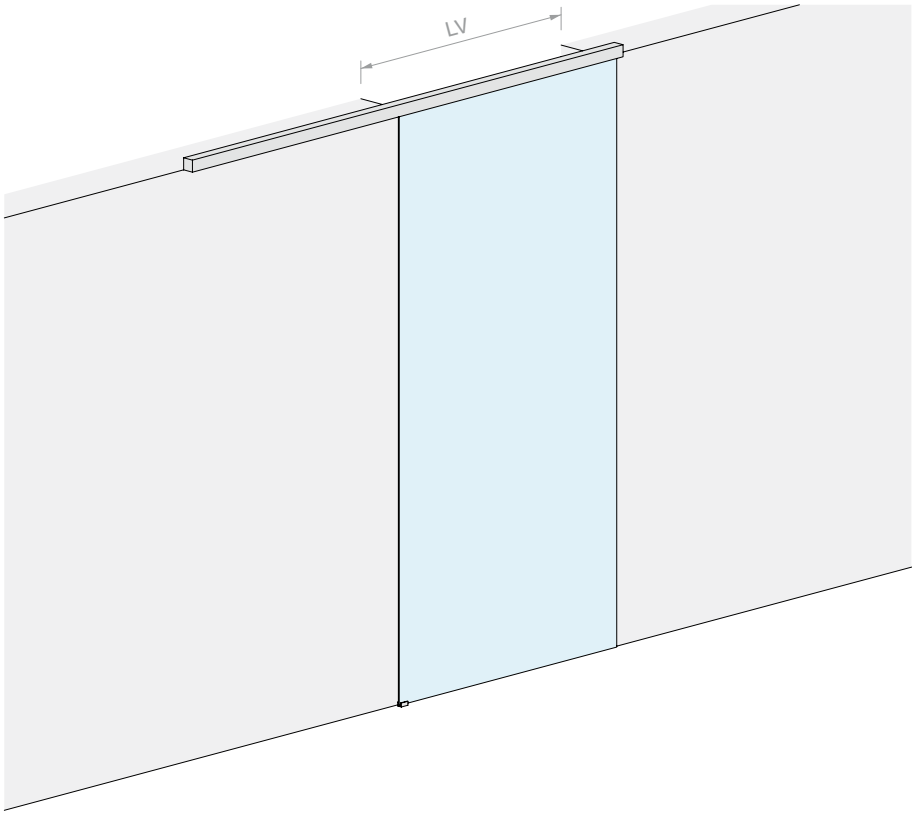

DOOR PANEL PANE

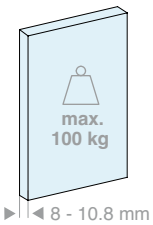

DOOR PANEL PANE

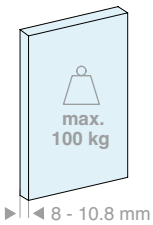

Kit comprising:

Art.	Description	Qty
LMGW	Set of accessories for a door	1 Pc
LMGWSIB200	Flush fit track	1 Pc
057.3085.200	Lower cover	1 Pc
057.3078.002	Finishing gasket	4 m
Optional		
042.3102.072	Softbreak damper, 20-60 kg	1 Pc
042.3102.071	Softbreak damper, 61-100 kg	1 Pc

Kit comprising:

Art.	Description	Qty
LMGW	Set of accessories for a door	1 Pc
LMGWSIB300	Flush fit track	1 Pc
057.3085.300	Lower cover	1 Pc
057.3078.002	Finishing gasket	6 m
Optional		
042.3102.072	Softbreak damper, 20-60 kg	1 Pc
042.3102.071	Softbreak damper, 61-100 kg	1 Pc

Art.	LV max	Qty
LMGWSI200	**920** mm	1 Pc

Art.	LV max	Qty
LMGWSI300	**1420** mm	1 Pc

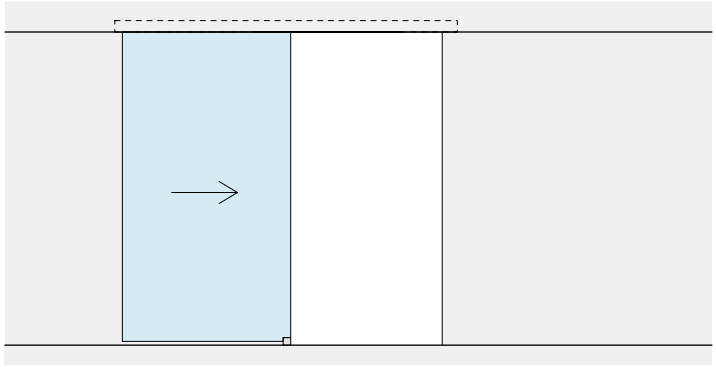

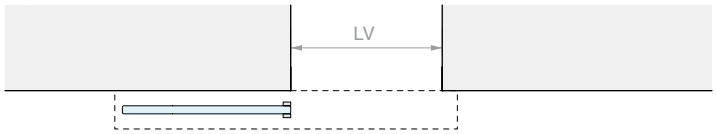
LV

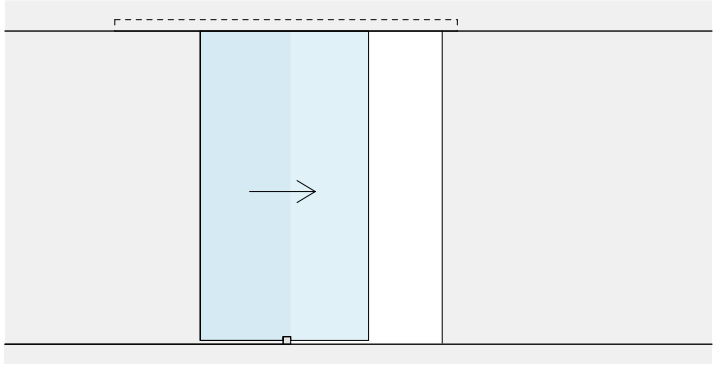

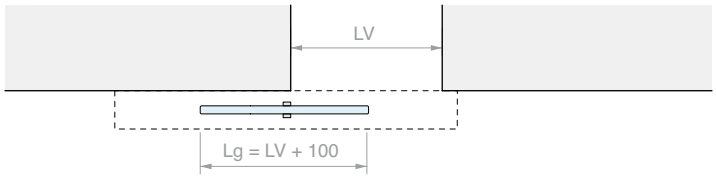
LV
Lg = LV + 100

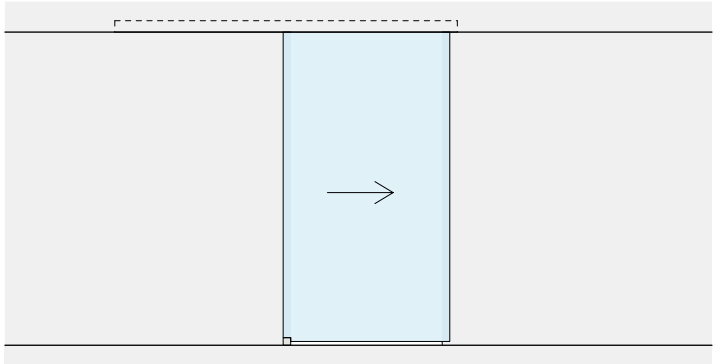

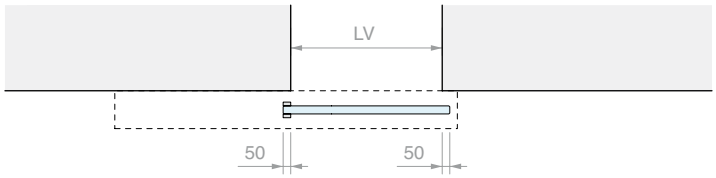
LV
50
50

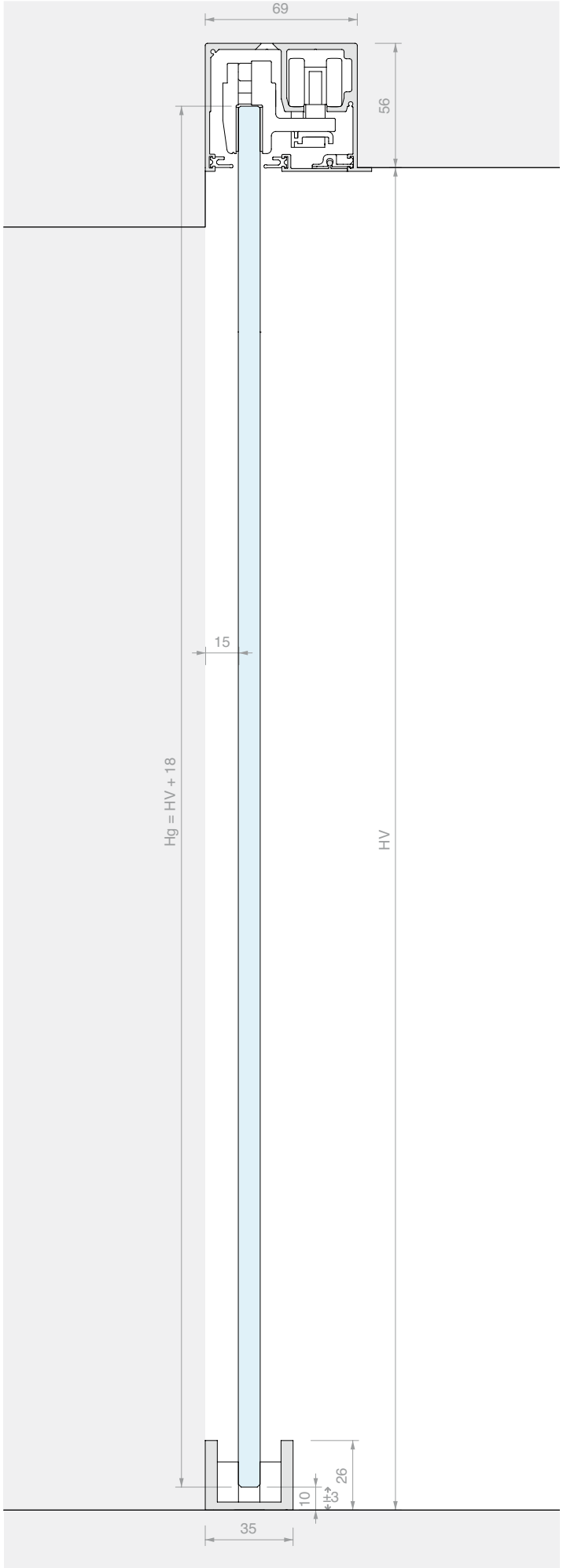
69
56
15
Hg = HV + 18
HV
26
10
±3
35

the BOOK

SLIDING DOOR KIT, FLUSH FIXING DOUBLE DOOR

Material: Aluminium
Finish: /88 /97

WITHOUT HOLES IN THE GLASS

DOOR OPENING SIZE

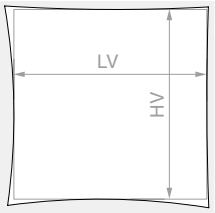

HV max: **2680** mm

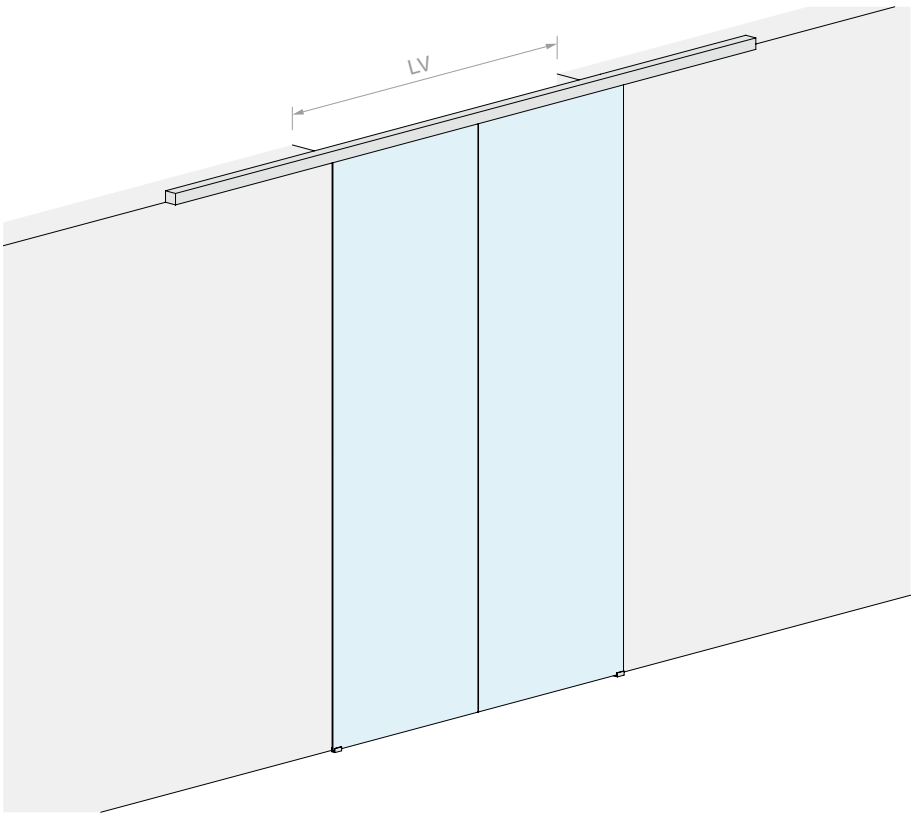

DOOR PANEL PANE

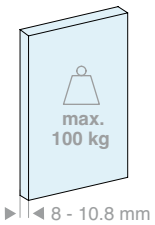

Kit comprising:

Art.	Description	Qty
LMGW	Set of accessories for a door	2 Pcs
LMGWSIB400	Flush fit track	1 Pc
057.3085.400	Lower cover	1 Pc
057.3078.002	Finishing gasket	8 m
Optional		
042.3102.072	Softbreak damper, 20-60 kg	1 Pc
042.3102.071	Softbreak damper, 61-100 kg	1 Pc
LMSINCRO	Synchronisation kit	1 Pc

Art.	LV max	Qty
LMGWSI400	**1940** mm	1 Pc

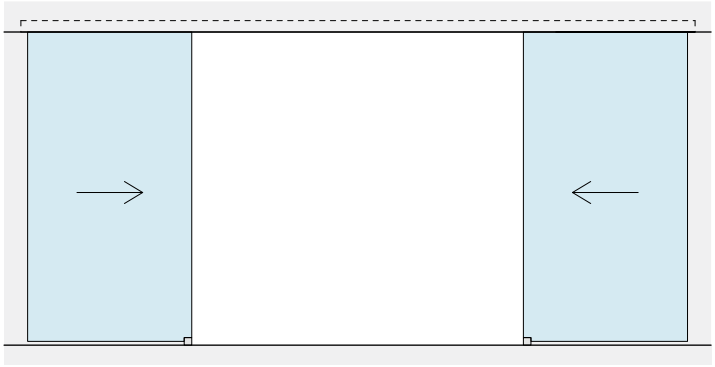

LV

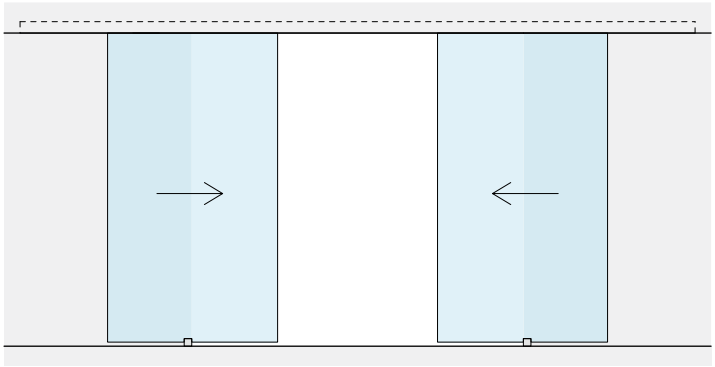

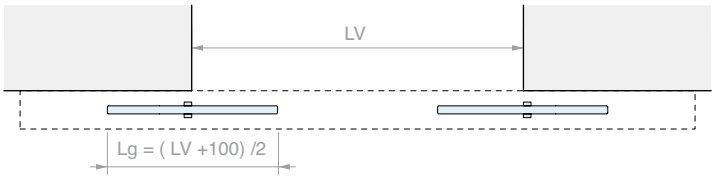
LV
Lg = (LV +100) /2

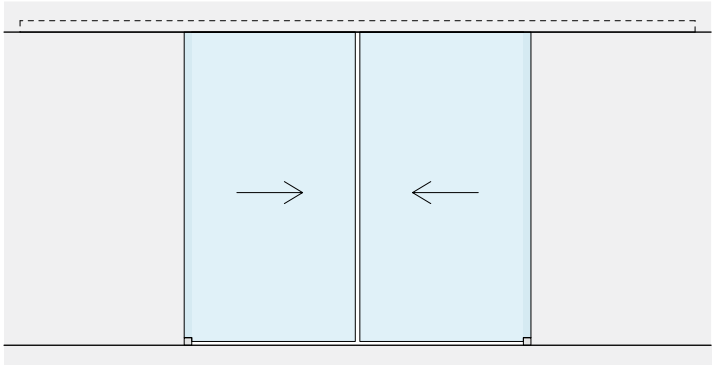

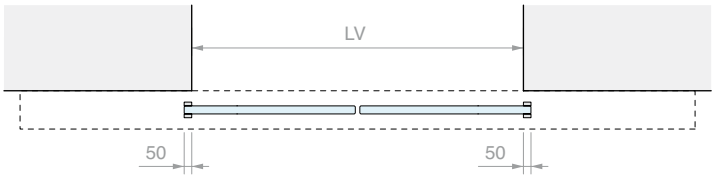
LV
50
50

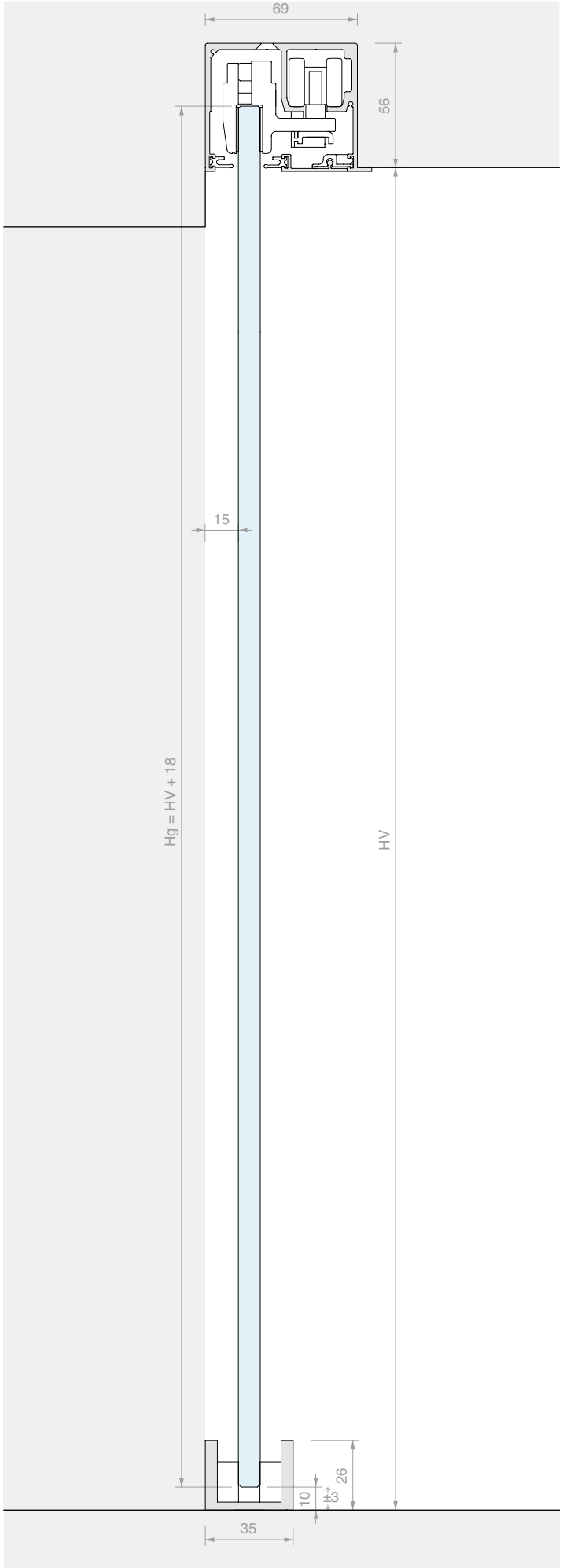
69
56
15
Hg = HV + 18
HV
26
±3
10
35

BOOK

SLIDING DOOR KIT, FLUSH FIXING
SINGLE DOOR WITH FIXED GLASS

Material: Aluminium
Finish: /88 /97

DOOR OPENING SIZE

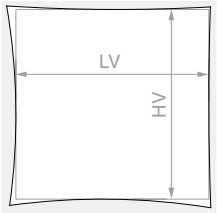

HV max: **2680** mm

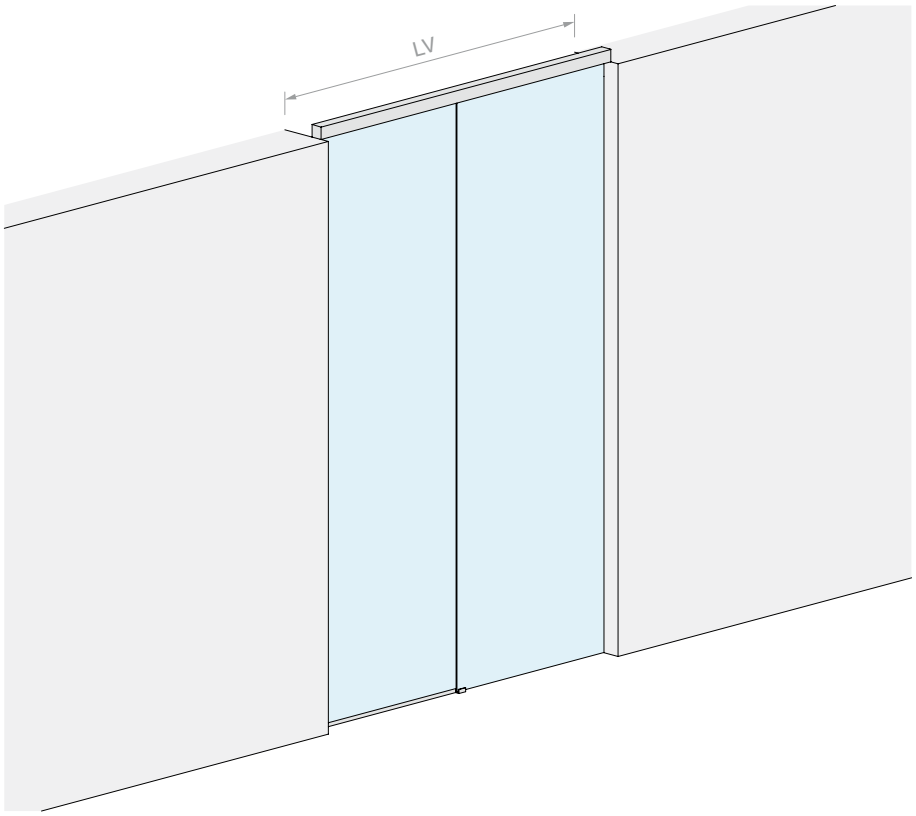

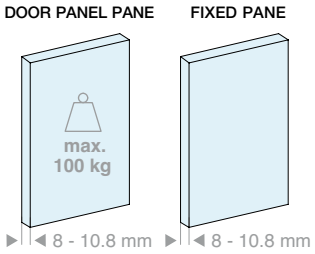

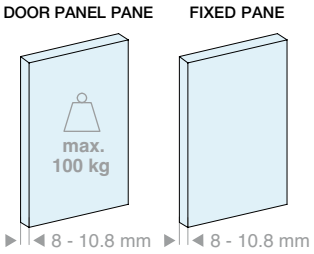

Kit comprising:

Art.	Description	Qty
LMGW	Set of accessories for a door	1 Pc
LMGWI.B200	Fixed flush fit track	1 Pc
057.3085.200	Lower cover	1 Pc
LMU20.150	U profile	1 Pc
042.3005.100	Finishing profile	1 Pc
LMU20TP	Finishing cap	1 Pc
057.3078.002	Finishing gasket	4 m
GTUP2	Glass holder gasket	5 m
Optional		
042.3102.072	Softbreak damper, 20-60 kg	1 Pc
042.3102.071	Softbreak damper, 61-100 kg	1 Pc
LMU20.300	U profile	1 Pc

Kit comprising:

Art.	Description	Qty
LMGW	Set of accessories for a door	1 Pc
LMGWI.B300	Fixed flush fit track	1 Pc
057.3085.300	Lower cover	1 Pc
LMU20.300	U profile	1 Pc
042.3005.200	Finishing profile	1 Pc
LMU20TP	Finishing cap	1 Pc
057.3078.002	Finishing gasket	6 m
GTUP2	Glass holder gasket	6 m
Optional		
042.3102.072	Softbreak damper, 20-60 kg	1 Pc
042.3102.071	Softbreak damper, 61-100 kg	1 Pc
LMU20.300	U profile	1 Pc

Art.	LV max	Qty
LMGWI200	**2000** mm	1 Pc

Art.	LV max	Qty
LMGWI300	**3000** mm	1 Pc

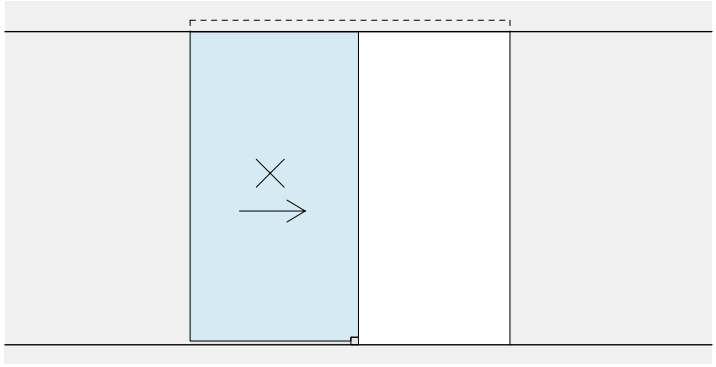

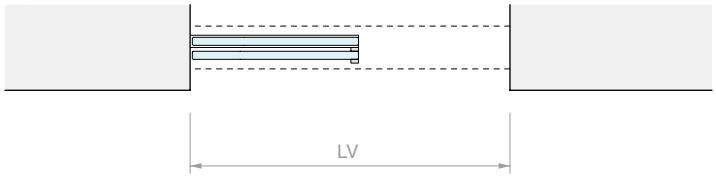
LV

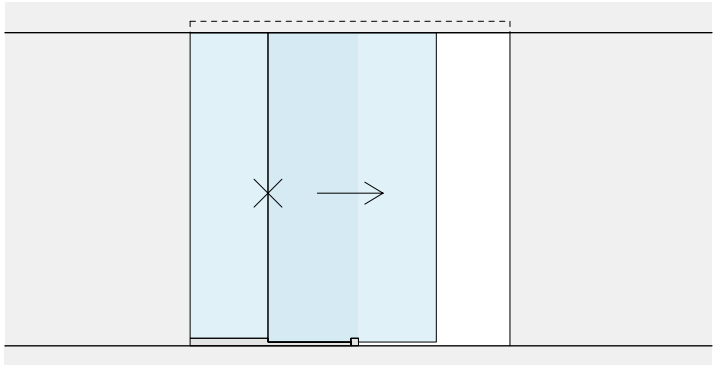

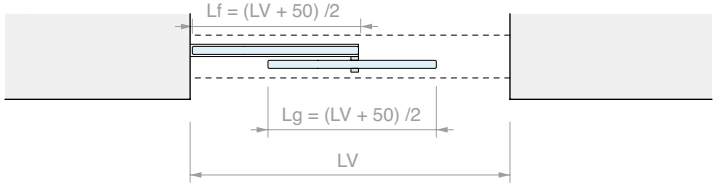
Lf = (LV + 50) /2
Lg = (LV + 50) /2
LV

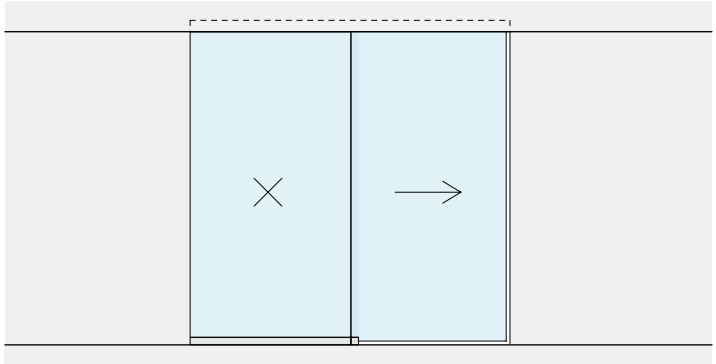

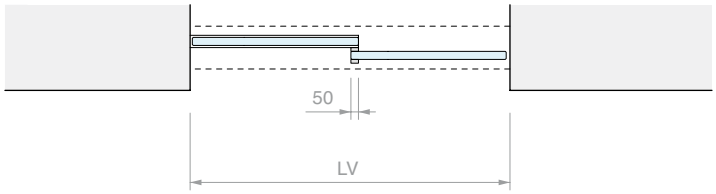
50
LV

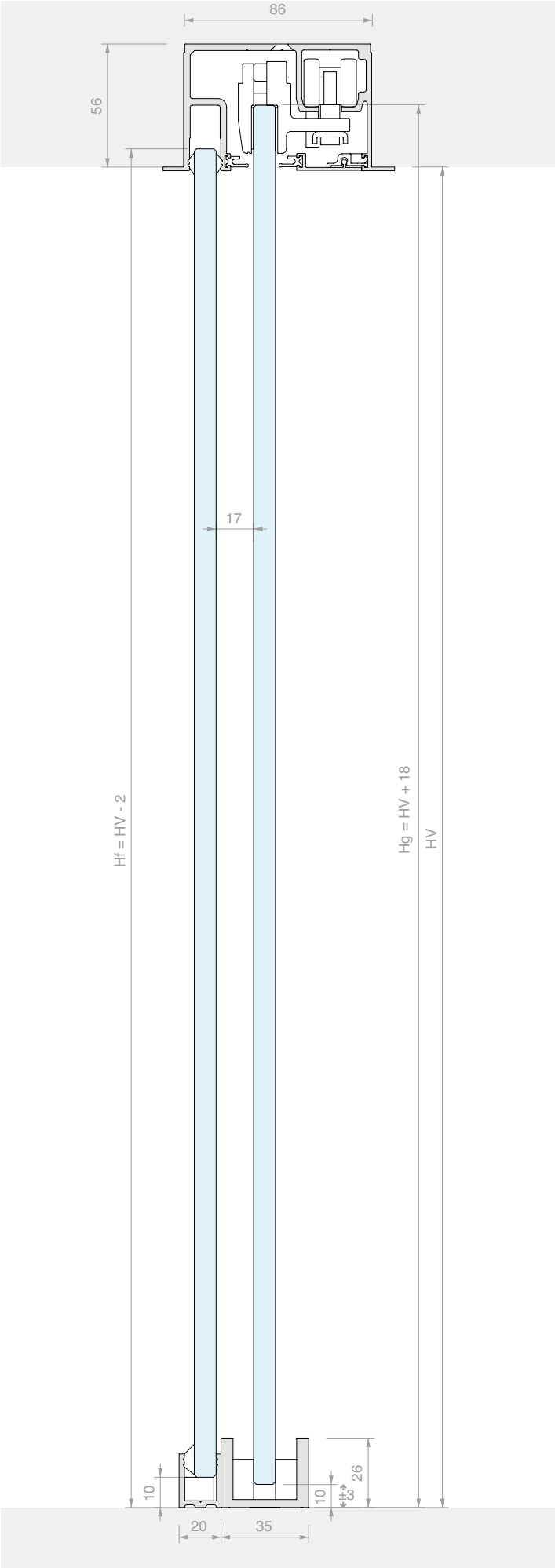
86
56
17
Hf = HV - 2
Hg = HV + 18
HV
10
10
26
3
20
35

SLIDING DOOR KIT, FLUSH FIXING WITH DOUBLE FIXED GLASS

Material: Aluminium
Finish: /88 /97

DOOR OPENING SIZE

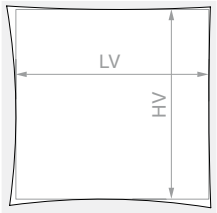

HV max: **2680** mm

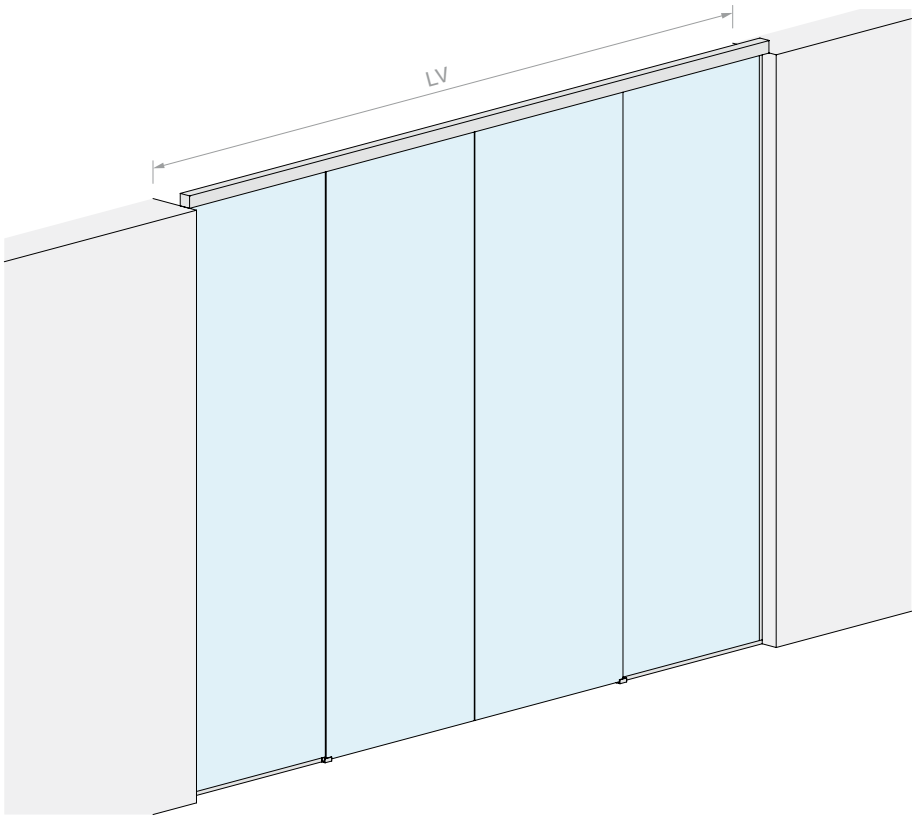

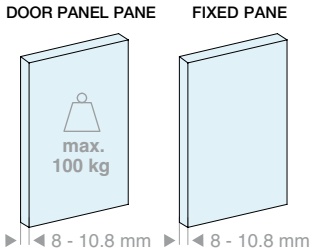

Kit comprising:

Art.	Description	Qty
LMGW	Set of accessories for a door	2 Pcs
LMGWI.B400	Fixed flush fit track	1 Pc
057.3085.400	Lower cover	1 Pc
LMU20.300	U profile	1 Pc
042.3005.300	Finishing profile	1 Pc
LMU20TP	Finishing cap	2 Pcs
057.3078.002	Finishing gasket	8 m
GTUP2	Glass holder gasket	9 m

Optional

042.3102.072	Softbreak damper, 20-60 kg	1 Pc
042.3102.071	Softbreak damper, 61-100 kg	1 Pc
LMU20.300	U profile	1 Pc
LMSINCRO	Synchronisation kit	1 Pc

Art.	LV max	Qty
LMGWI400	**4000** mm	1 Pc

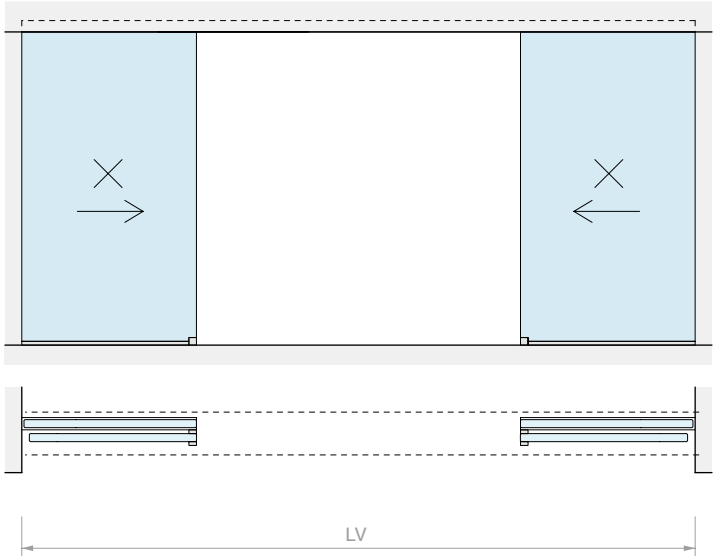
LV

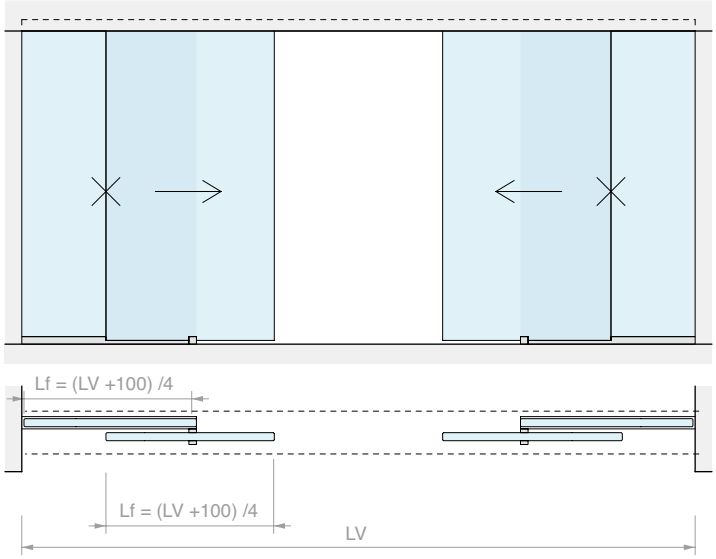
Lf = (LV +100) /4
Lf = (LV +100) /4
LV

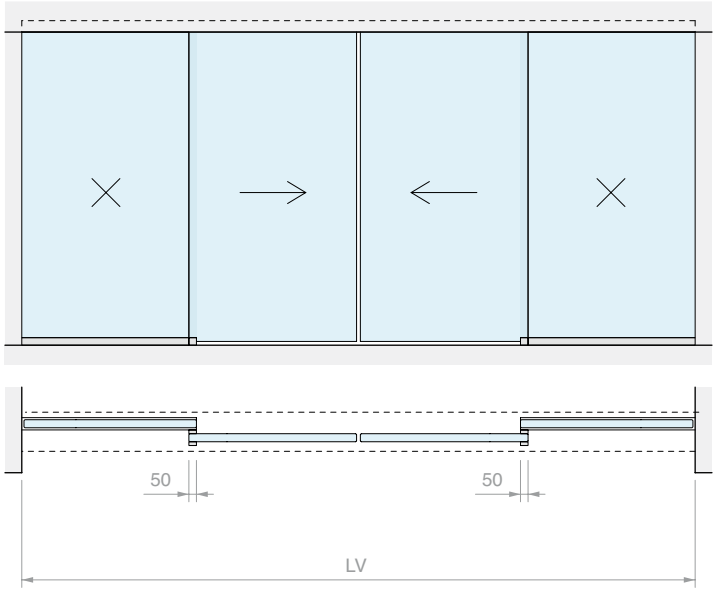
50
50
LV

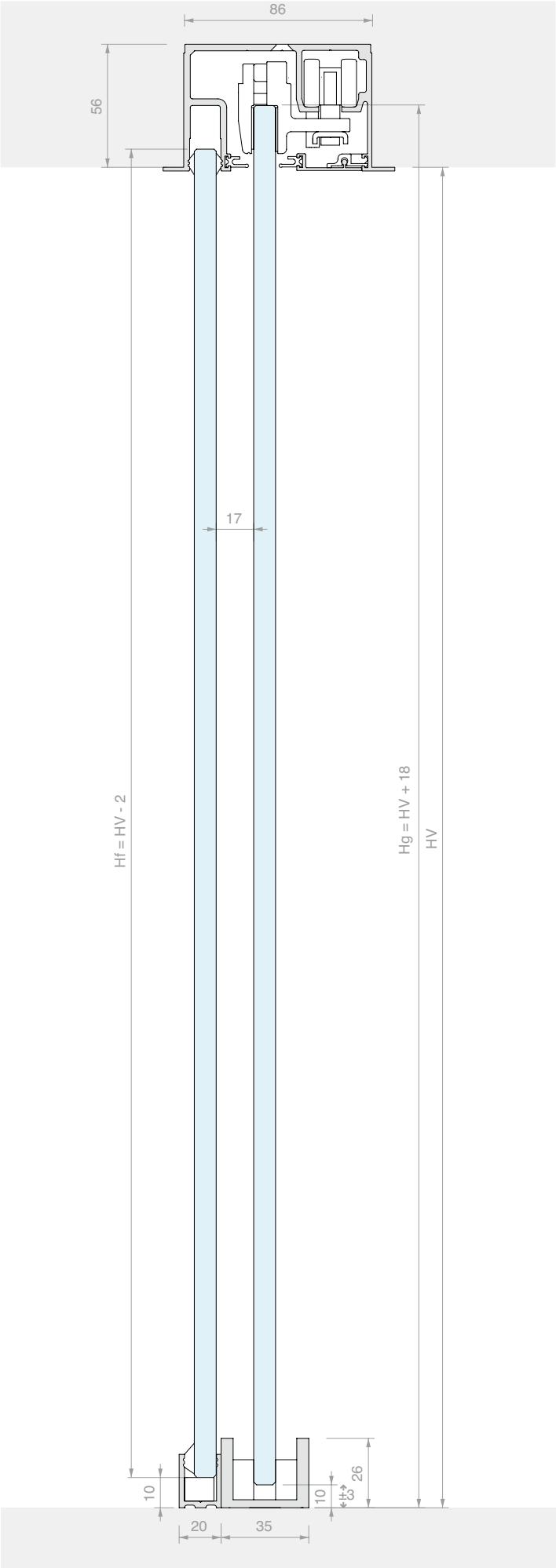
86
56
17
Hf = HV - 2
Hg = HV + 18
HV
10
10
26
3
20
35

CEILING FIXING TRACK

Material: Aluminium

Finish: /88 /97

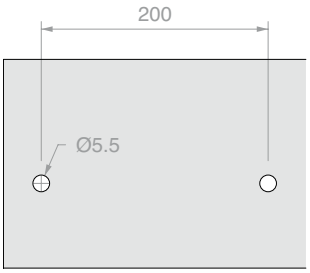

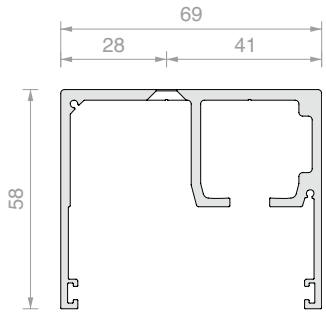

Art.	Length	Qty
LMGWSB200	**2000** mm	1 Pc
LMGWSB300	**3000** mm	1 Pc
LMGWSB400	**4000** mm	1 Pc
LMGWSB600	**6000** mm	1 Pc

FIXED CEILING FIXING TRACK

Material: Aluminium

Finish: /88 /97

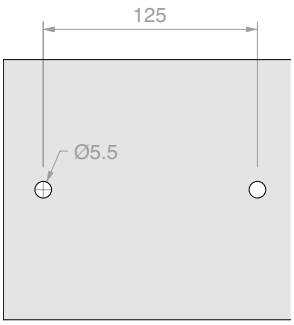

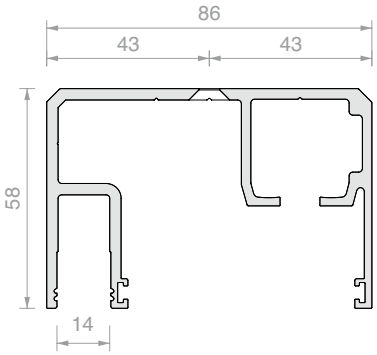

Art.	Length	Qty
057.3084.200	**2000** mm	1 Pc
057.3084.300	**3000** mm	1 Pc
057.3084.400	**4000** mm	1 Pc
057.3084.600	**6000** mm	1 Pc

FLUSH FIT TRACK

Material: Aluminium

Finish: /88 /97

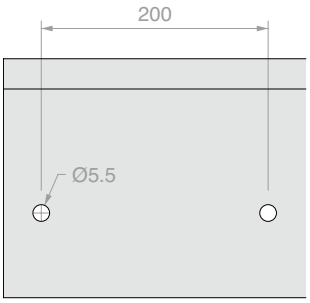

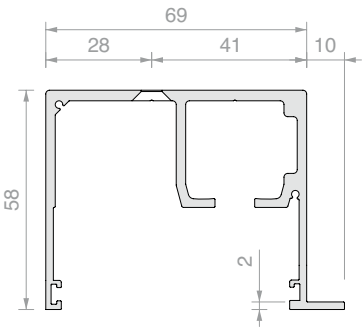

Art.	Length	Qty
LMGWSIB200	**2000** mm	1 Pc
LMGWSIB300	**3000** mm	1 Pc
LMGWSIB400	**4000** mm	1 Pc
LMGWSIB600	**6000** mm	1 Pc

FLUSH FIT TRACK WITH FIXED GLASS

Material: Aluminium

Finish: /88 /97

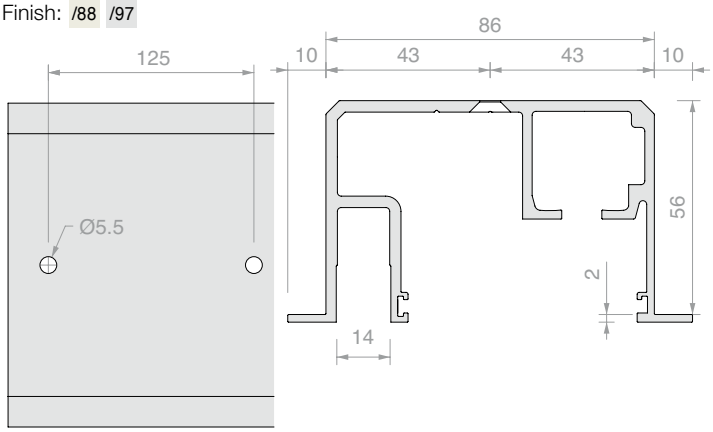

Art.	Length	Qty
LMGWI.B200	**2000** mm	1 Pc
LMGWI.B300	**3000** mm	1 Pc
LMGWI.B400	**4000** mm	1 Pc
LMGWI.B600	**6000** mm	1 Pc

LOWER COVER

Material: Aluminium

Finish: /88 /97

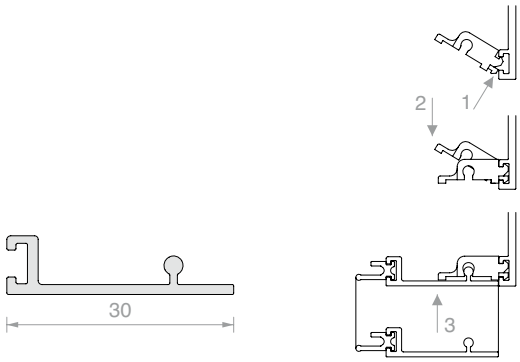

Art.	Length	Qty
057.3085.200	**2000** mm	1 Pc
057.3085.300	**3000** mm	1 Pc
057.3085.400	**4000** mm	1 Pc
057.3085.600	**6000** mm	1 Pc

FINISHING PROFILE FOR SEATING FIXED GLASS

Material: Aluminium

Finish: /88 /97

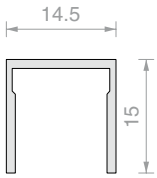

Art.	Length	Qty
042.3005.100	**1000** mm	1 Pc
042.3005.200	**2000** mm	1 Pc
042.3005.300	**3000** mm	1 Pc
042.3005.400	**4000** mm	1 Pc
042.3005.600	**6000** mm	1 Pc

U PROFILE

Material: Aluminium

Finish: /6 /88 /91 /97

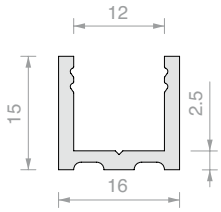

Art.	Length	Qty
PBD3183.150	**1498** mm	1 Pc
PBD3183.220	**2200** mm	1 Pc
PBD3183	**3000** mm	1 Pc

U PROFILE

Material: Aluminium

Finish: /6 /88 /91 /97

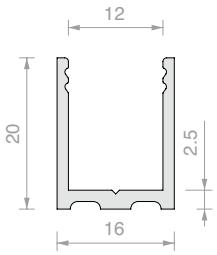

Art.	Length	Qty
LMU20.100	**996** mm	1 Pc
LMU20.150	**1498** mm	1 Pc
LMU20.300	**3000** mm	1 Pc

FINISHING CAP

Material: Aluminium

Finish: /88 /91 /97 /R2

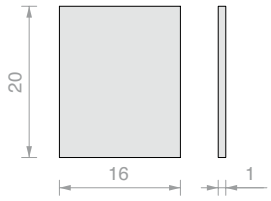

Art.	Qty
LMU20TP	1 Pc

PAIR OF END CAPS FOR LMGWSB / LMGWSIB

Material: Aluminium

Finish: /88 /97

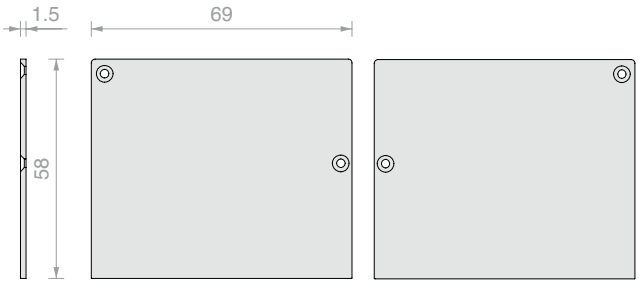

Art.	Qty
LMGWST01	1 Pc

FINISHING GASKET

Material: Rubber

Colour: black

To be inserted into profiles Art. LMGWB, 057.3084, 057.3085, LMGWSIB, LMGWI

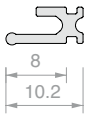

Art.	Qty
057.3078.002	1 m

GLASS HOLDER SEAL

Material: PVC

Art.	Thickness	Colour	Qty
GTUP2	**2** mm	Transparent	1 m
GTUP3	**3** mm	Transparent	1 m
GTUP4	**4** mm	Transparent	1 m
GTUP5	**5** mm	Transparent	1 m
GTUP6	**6** mm	Transparent	1 m

Art.	Thickness	Colour	Qty
GTUP2G	**2** mm	Embossed	1 m
GTUP3G	**3** mm	Embossed	1 m
GTUP4G	**4** mm	Embossed	1 m
GTUP5G	**5** mm	Embossed	1 m
GTUP6G	**6** mm	Embossed	1 m

Art.	Thickness	Colour	Qty
GTUP2N	**2** mm	Black	1 m
GTUP3N	**3** mm	Black	1 m
GTUP4N	**4** mm	Black	1 m
GTUP5N	**5** mm	Black	1 m
GTUP6N	**6** mm	Black	1 m

SOFTBREAK DAMPER

Material: ABS, zamak and steel

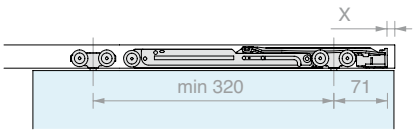

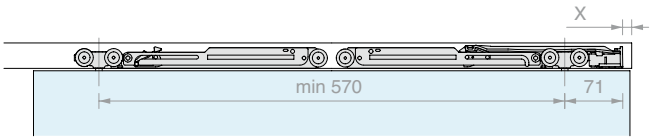

Art.	Load	Qty
042.3102.072	From **20** to **60** kg	1 Pc
042.3102.071	From **61** to **100** kg	1 Pc

SET OF ACCESSORIES FOR A DOOR

composed of:
2 Pcs Rollers with screw
2 Pcs Clamps
1 Pc Stop with buffer
1 Pc Stop without buffer
12 Pcs Clip for cover
1 Pc Floor guide
Finish: /88 /97

Art.	For glass	Load	Qty
LMGW	From **8** to **10.8** mm	**100** kg	1 Pc

SYNCHRONISATION KIT FOR 2 IN-LINE DOORS

Art.	Q.ty
LMSINCRO	1 Pc

BOTTOM STOP

Material: Zamak

Finish: /97

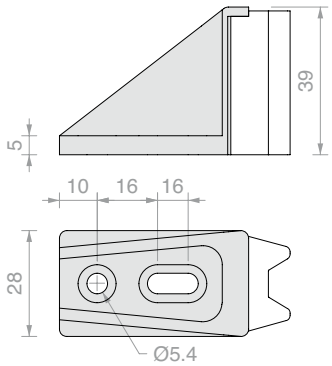

Art.	Qty
057.3099.071	1 Pc

ADJUSTABLE FLOOR GUIDE

Material: aluminium

Finish: /88 /91 /97 /R2

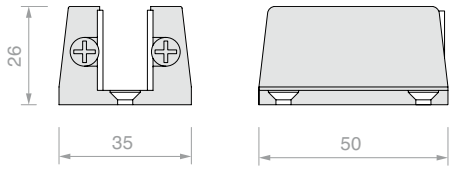

Art.	For glass	Qty
057.3030.071	From **6** to **12.7** mm	1 Pc

END STOP WITH BUFFER

Material: ABS

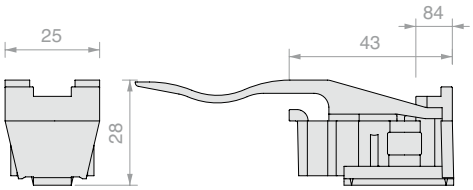

Art.	Q.ty
057.3073.072	1 Pc

END STOP WITHOUT BUFFER

Material: ABS

Art.	Q.ty
057.3073.071	1 Pc

Forme

Smaller profiles for finishing glass door panels.
Applied to the glass with a 0.5 mm thick two-sided tape, silicone or UV bonding.
Select the right guide and accessories for holding the glass and your edging profile.

FLAT PROFILE FORME SERIES

Material: Aluminium

Finish: /6 /88 /97 /RAL

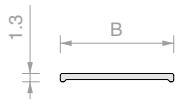

Art.	B	Length	Qty
FOP10.30	**10** mm	**3000** mm	1 Pc
FOP15.30	**15** mm	**3000** mm	1 Pc
FOP20.30	**20** mm	**3000** mm	1 Pc

U PROFILE, FORME SERIES

Material: Aluminium

Finish: /6 /88 /97 /RAL

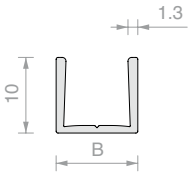

Art.	B	Length	For glass	Qty
FOU1011.30	**10.8** mm	**3000** mm	**8** mm	1 Pc
FOU1013.30	**12.8** mm	**3000** mm	**10** mm	1 Pc

TESA® ACXplus DOUBLE-SIDED TAPE

Transparent double-sided tape for fixing glass, steel and aluminium.

The paper liner makes manual application of the tape easier.

Art.	Dimensions	Thickness	Qty
TS250065	**6** mm x **25** m	**0.5** mm	1 Pc
TS250125	**12** mm x **25** m	**0.5** mm	1 Pc
TS250155	**15** mm x **25** m	**0.5** mm	1 Pc

FLOOR GUIDE

Material: Aluminium

Finish: /88 /97 /R2

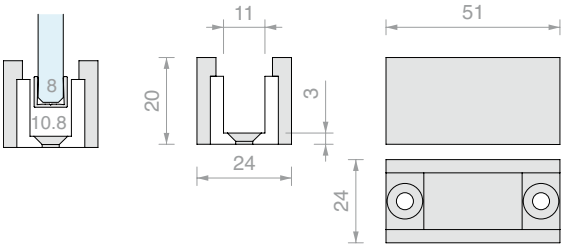

Art.	For profile	Qty
LMGF	FOU1011	1 Pc

ADAPTOR FOR GUIDE LMGF

Accessory for inserting into the LMGF floor guide

Material: POM

Finish: /56

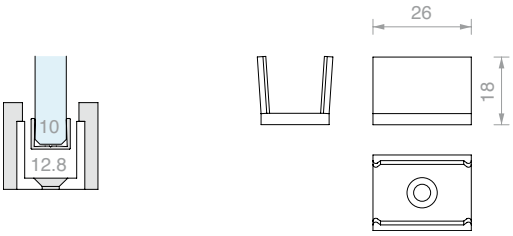

Art.	For profile	Qty
LMGF13-POM	FOU1013	1 Pc

LM CLIPO

Design

The LM CLIPO 36 system combines versatility with small dimensions to create walk-in wardrobes and doors up to 1000 mm x 2100 mm.

Designed for glass thicknesses from 6 to 8 mm in two different configurations: with upper and lower glass-holder profile, model GPPK, or with upper glass-holder profile and U-shaped lower guide, model GPK.

The LM CLIPO 36 models can also be combined with the convenience of a soft close for doors weighing up to 36 kg.

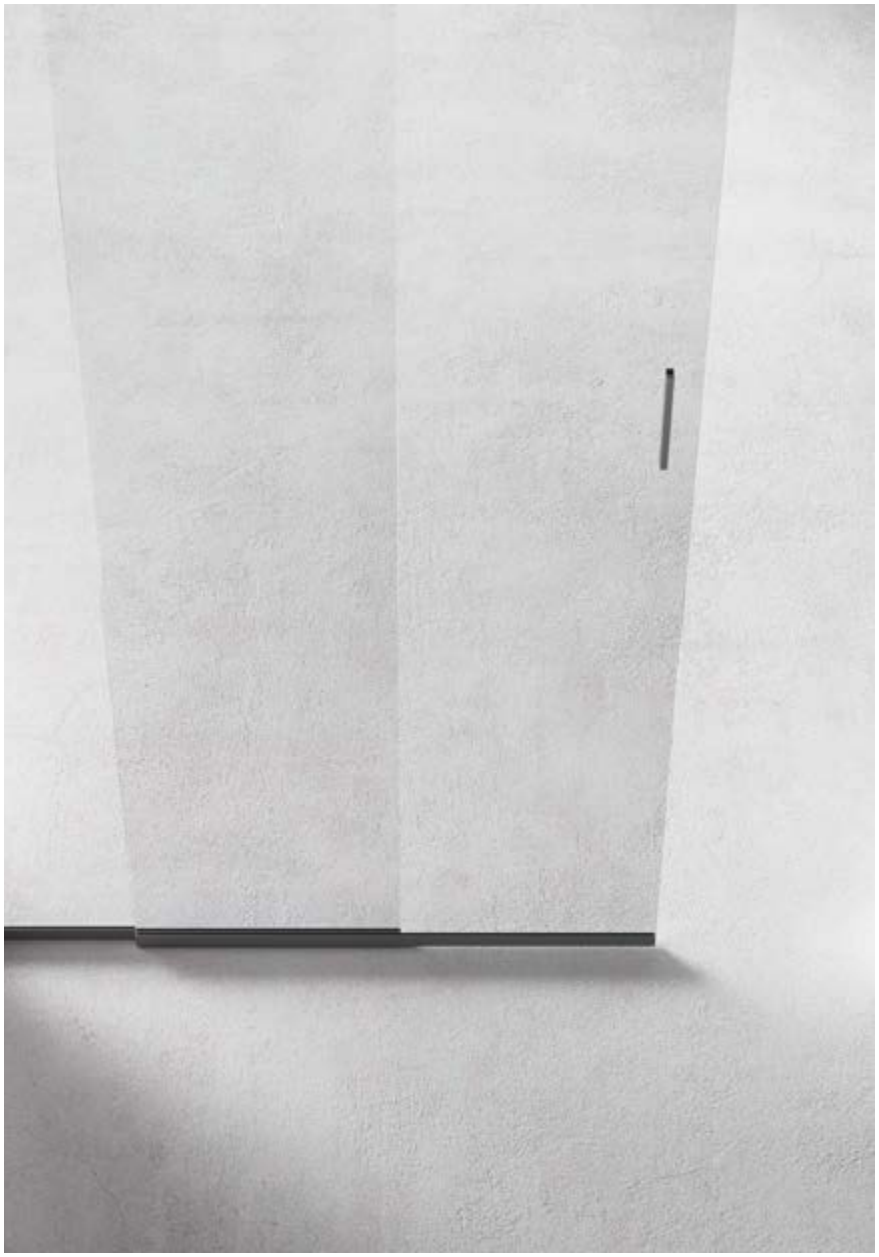

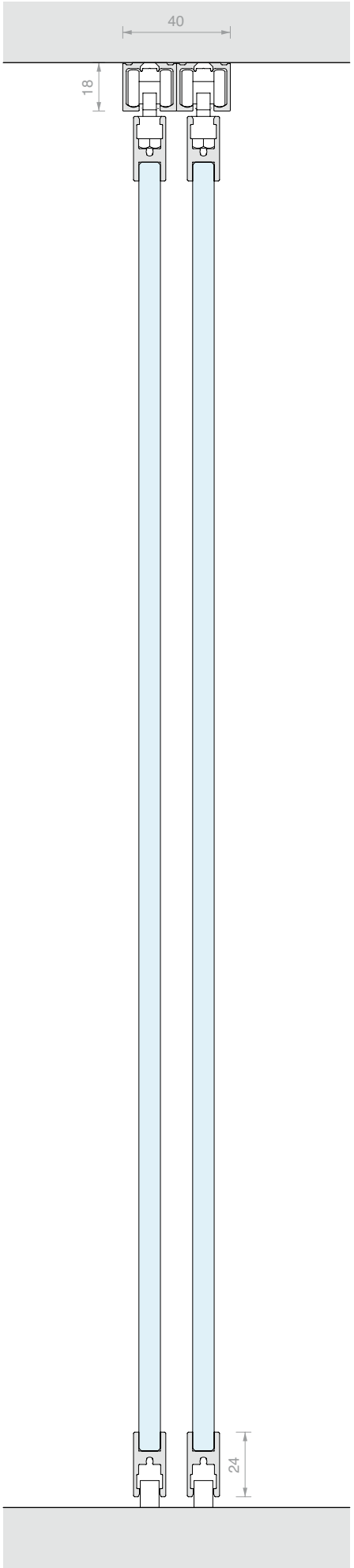

/6
Matt black

/88
Brushed steel effect aluminium

/97
Matt aluminium

LM CLIPO

Technical properties

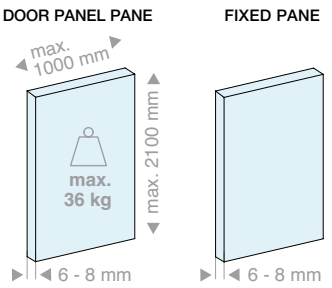

3 types of installation

Ceiling

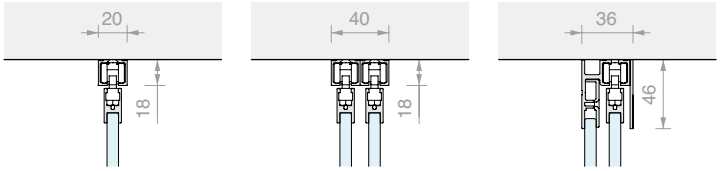

1 way | 2-way | 1 way + fixed

Ceiling, flush fit

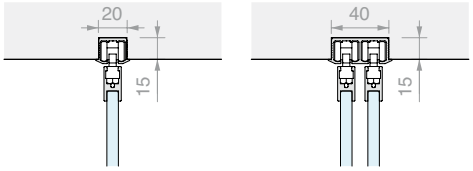

1 way | 2-way

Wall

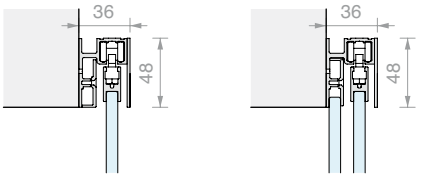

1 way | 1 way + fixed

2 types of door installation

GPPK

GPK

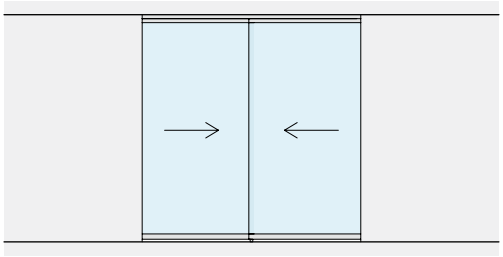

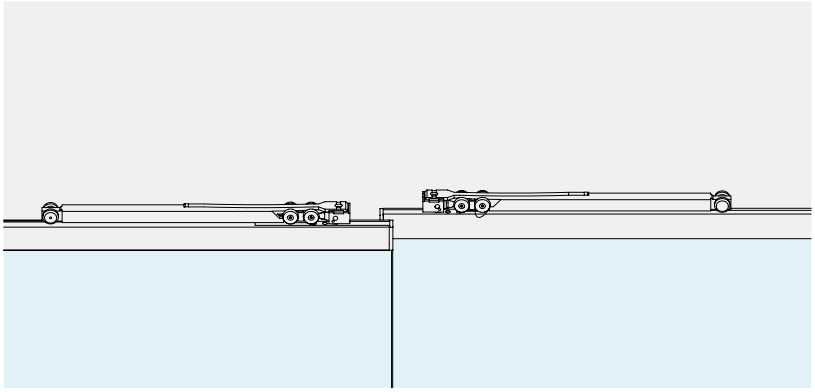

SOFT CLOSE
The use of dampers gives controlled, gentle opening and closing.

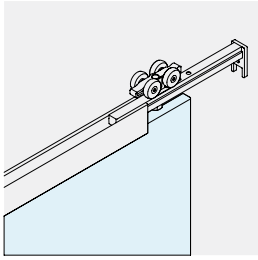

DOOR PANEL ADJUSTMENT
The height of each roller can be adjusted to adjust the position of the panel by ± 2 mm.

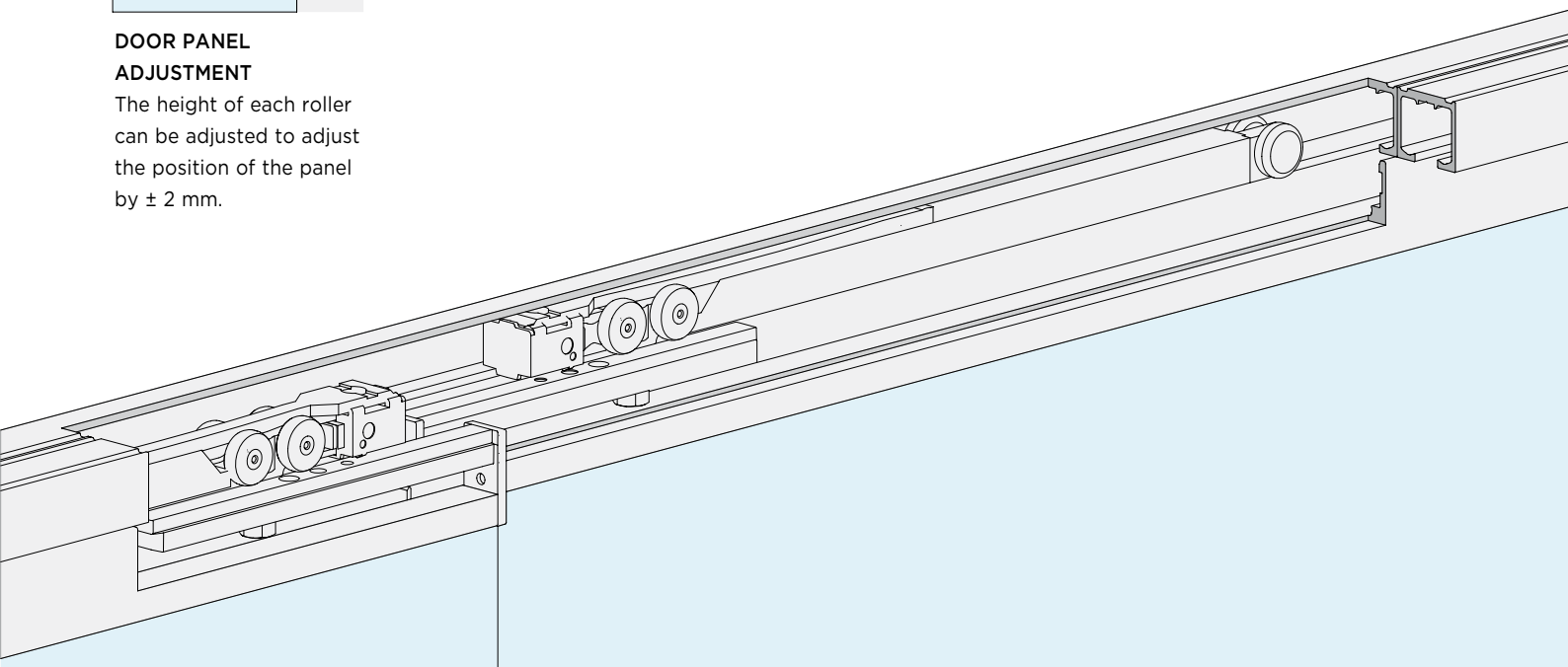

LM CLIPO

Kit

CEILING FIXING

MOVING DOORS

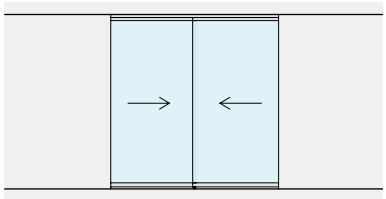

Page 270

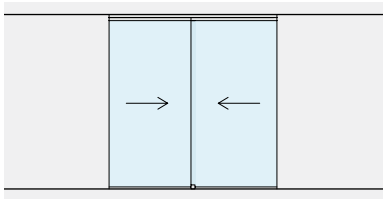

Page 272

MOVING DOORS
WITH FIXED GLASS

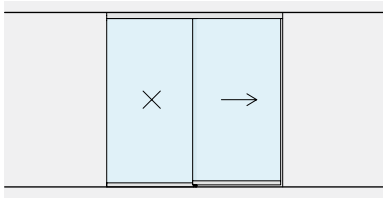

Page 276

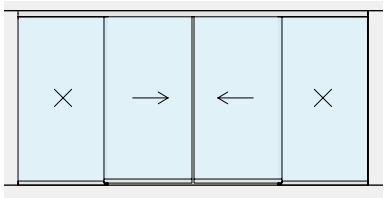

Page 280

WALL FIXING

MOVING DOORS

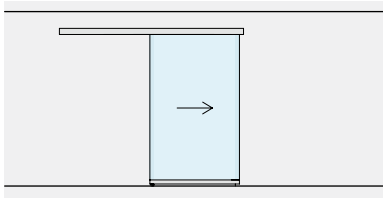

Page 284

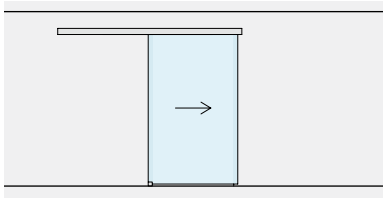

Page 292

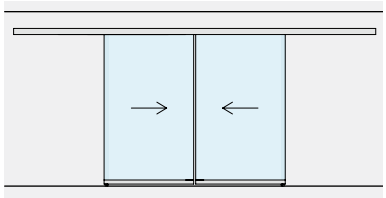

Page 288

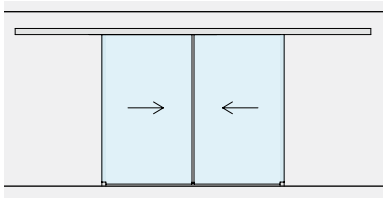

Page 296

MOVING DOORS
WITH FIXED GLASS

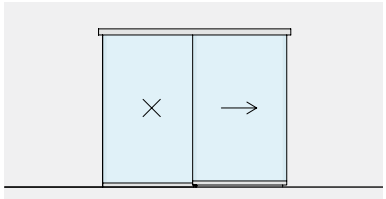

Page 300

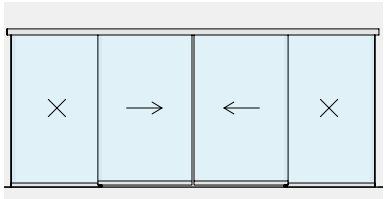

Page 304

the BOOK

CEILING FIXING SLIDING DOOR KIT TWO INDEPENDENT DOORS WITH GPPK LOWER GLASS HOLDER PROFILE

Material: Aluminium
Finish: /6 /88 /97

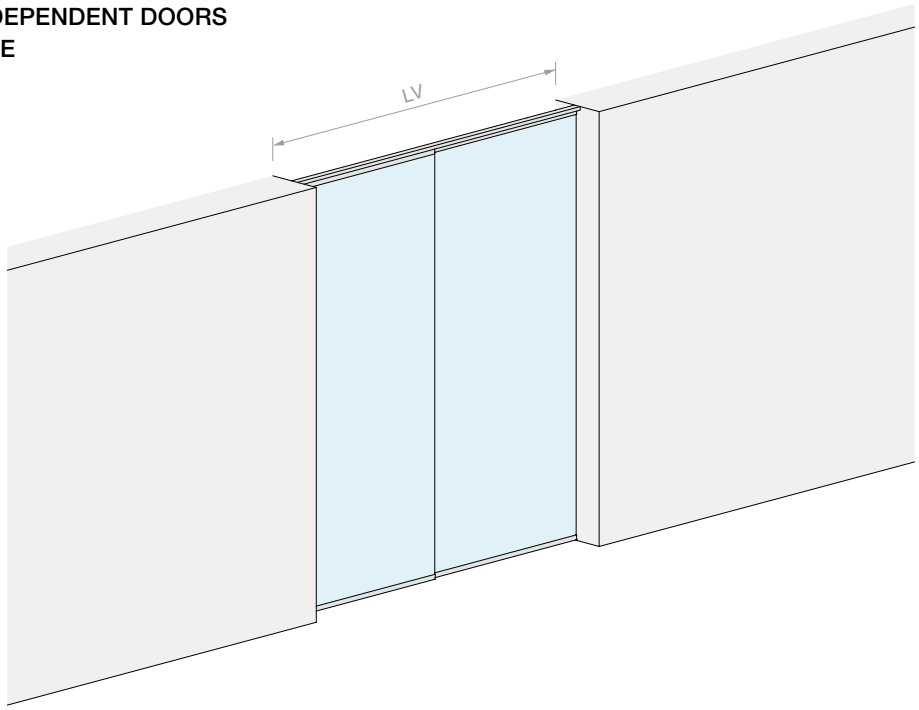

DOOR OPENING SIZE

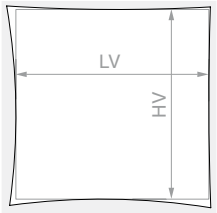

HV max: **2160** mm

DOOR PANEL PANE

Kit comprising:

Art.	Description	Qty
053.3326.200	Ceiling fixing single track	2 Pcs
053.3072.200	Glass holder profile	2 Pcs
053.3361.072	GPPK sliding door panel kit	2 Pcs
Optional		
057.3159.071	2 dampers up to 15 kg	1 Pc
057.3159.072	2 dampers up to 26 kg	1 Pc
057.3159.073	2 dampers up to 36 kg	1 Pc
LM17019TP10	End cap for single track	1 Pc

Art.	LV max	Qty
LMC36GPPK12.200	**1960** mm	1 Pc

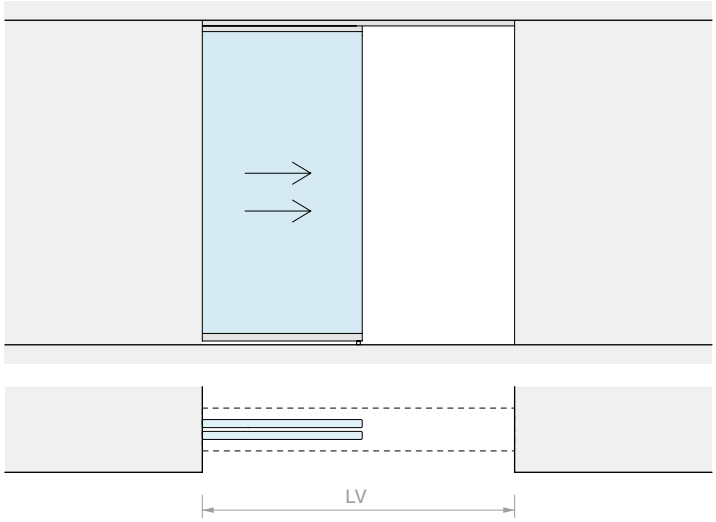
LV

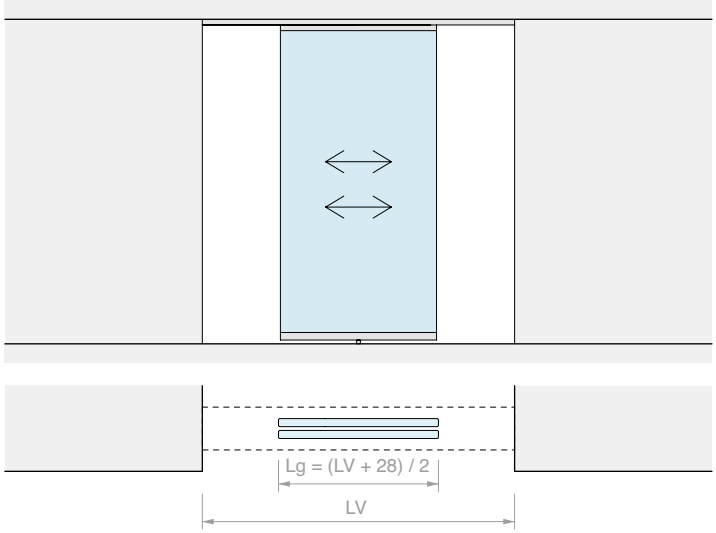
Lg = (LV + 28) / 2
LV

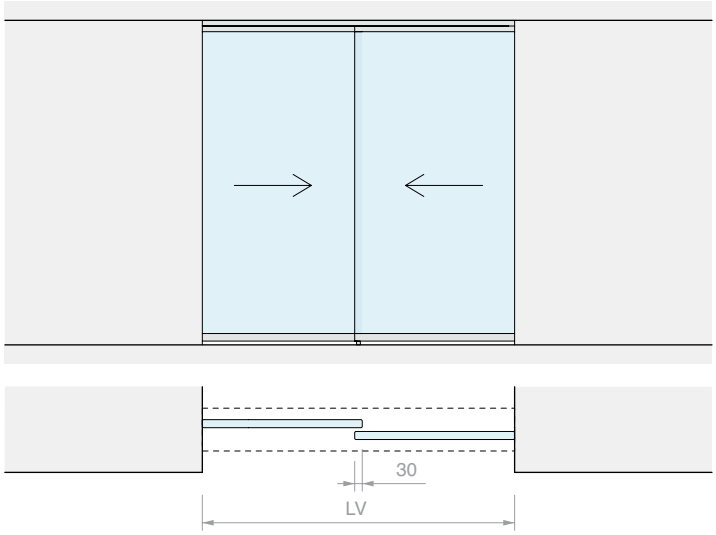
30
LV

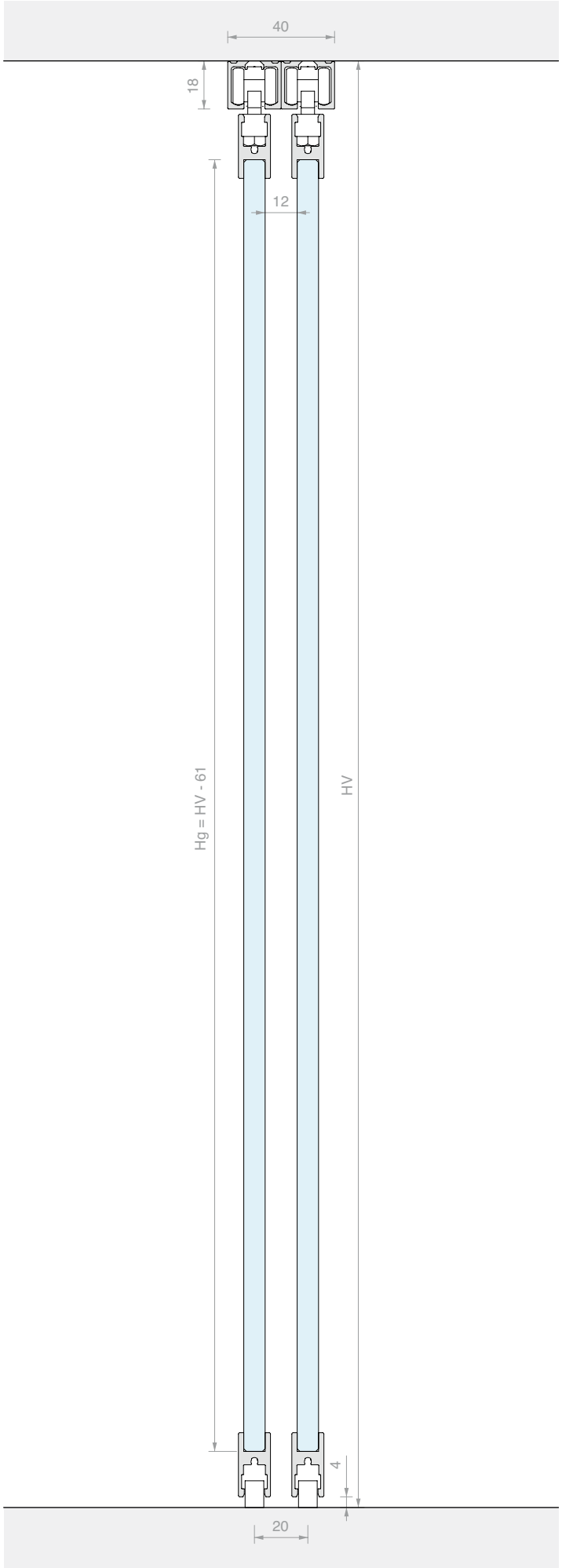
40
18
12
Hg = HV - 61
HV
4
20

SLIDING DOOR KIT, CEILING FIXING
TWO SEPARATE GPK DOORS

Material: Aluminium
Finish: /6 /88 /97

DOOR OPENING SIZE

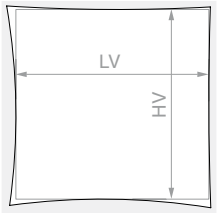

HV max: **2140** mm

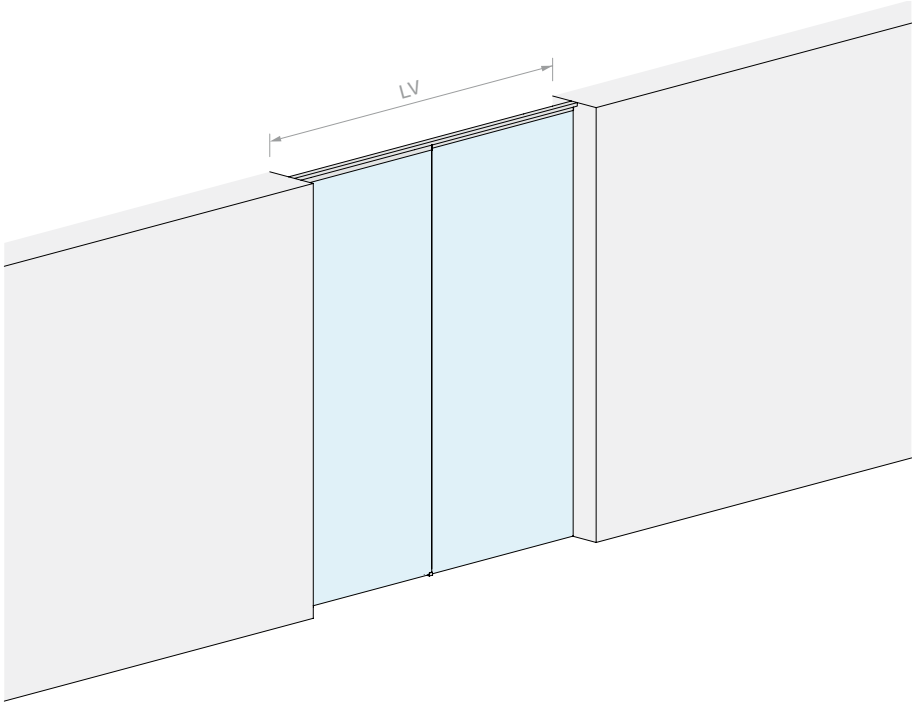

DOOR PANEL PANE

Kit comprising:

Art.	Description	Qty
053.3326.200	Ceiling fixing single track	2 Pcs
053.3072.200	Glass holder profile	1 Pc
053.3361.071	GPK sliding door panel kit	2 Pcs
Optional		
057.3159.071	2 dampers up to 15 kg	1 Pc
057.3159.072	2 dampers up to 26 kg	1 Pc
057.3159.073	2 dampers up to 36 kg	1 Pc
LM17019TP10	End cap for single track	1 Pc

Art.	LV max	Qty
LMC36GPK12.200	**1960** mm	1 Pc

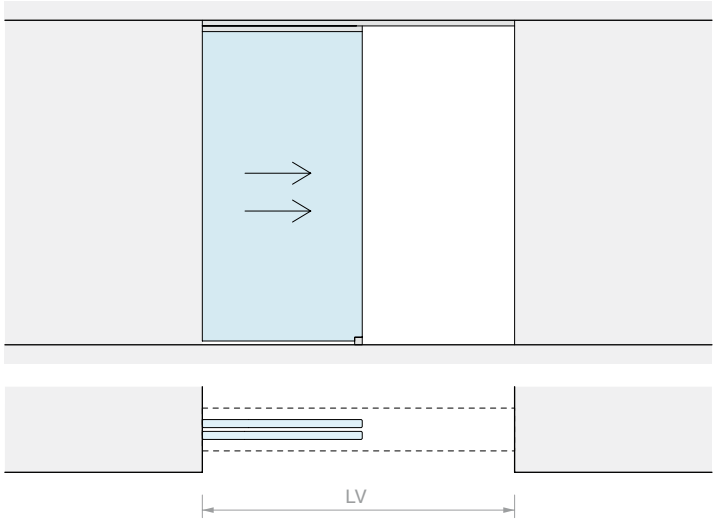
LV

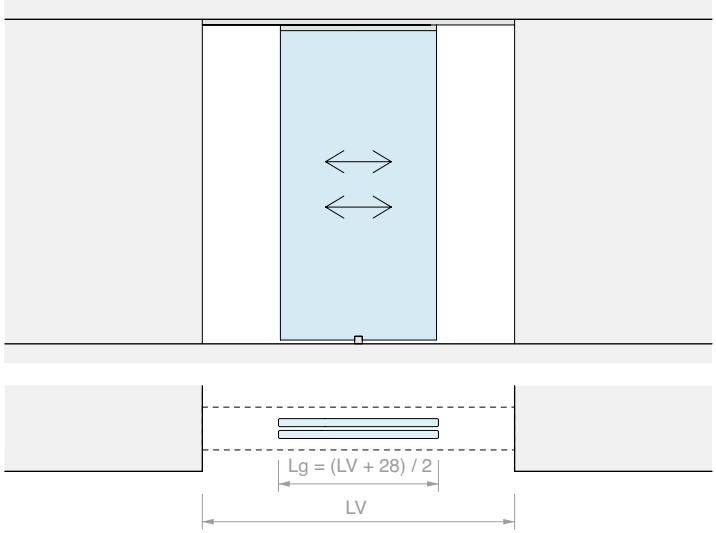
Lg = (LV + 28) / 2
LV

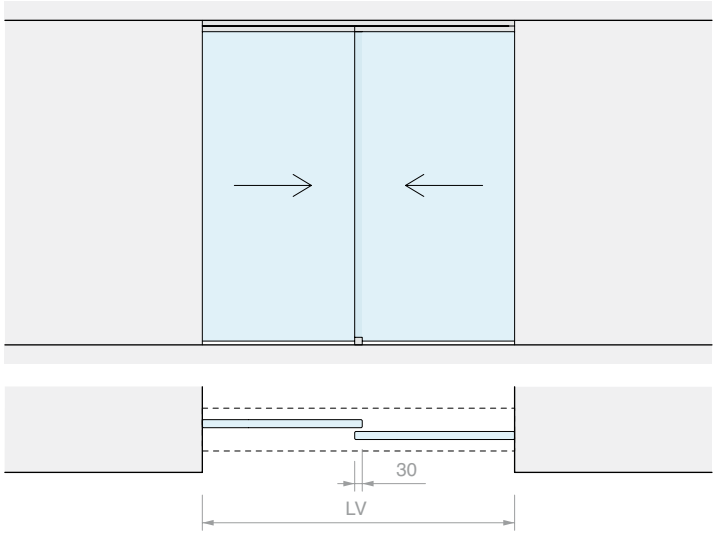
30
LV

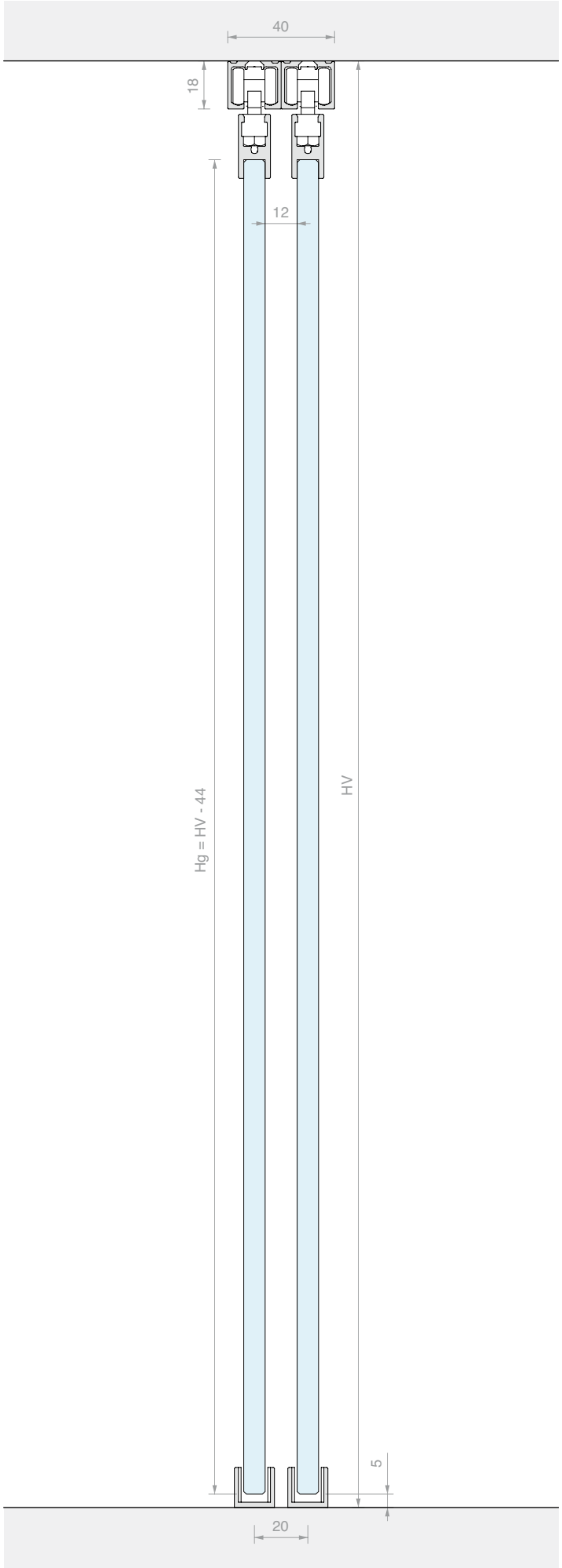
40
18
12
Hg = HV - 44
HV
5
20

CEILING FIXING SLIDING DOOR KIT
SINGLE DOOR WITH FIXED GLASS
WITH GPPK LOWER GLASS HOLDER PROFILE

Material: Aluminium
Finish: /6 /88 /97

DOOR OPENING SIZE

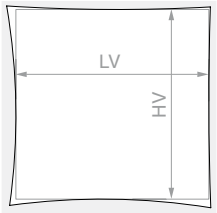

HV max: **2160** mm

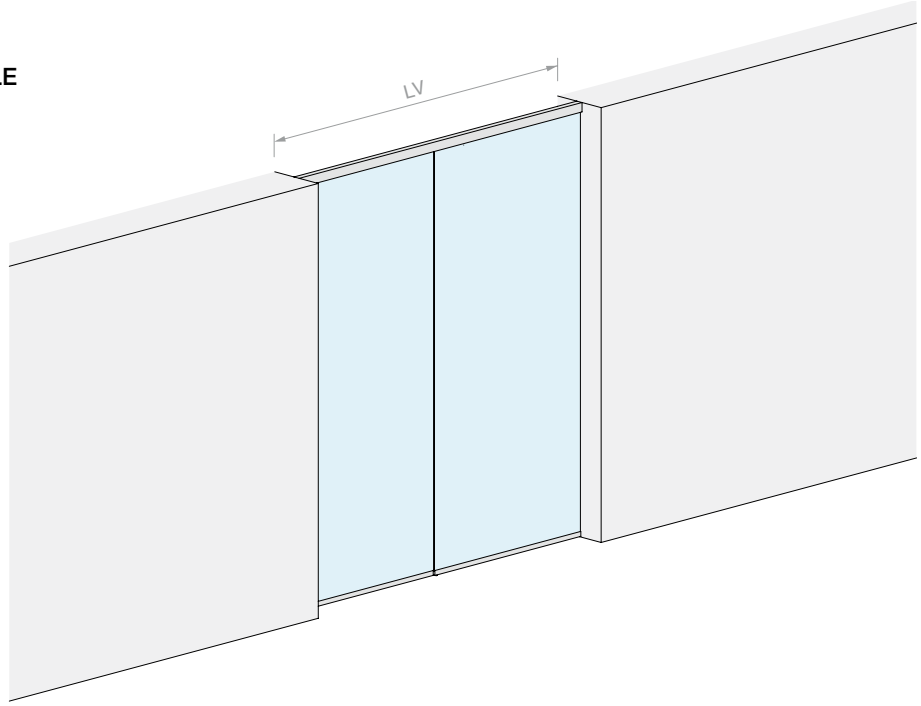

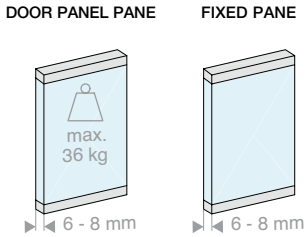

Kit comprising:

Art.	Description	Qty
053.3338.200	Ceiling fixing single track with fixed glass	1 Pc
053.3072.200	Glass holder profile	1 Pc
053.3072.100	Glass holder profile	1 Pc
053.3071.300	Support profile for fixed glass	1 Pc
053.3361.072	GPPK sliding door panel kit	1 Pc
053.3075.300	Track cover	1 Pc
VIT965-3X8-ZN	Fixing screw for fixed glass support profile	4 Pcs

Optional

057.3159.071	2 dampers up to 15 kg	1 Pc
057.3159.072	2 dampers up to 26 kg	1 Pc
057.3159.073	2 dampers up to 36 kg	1 Pc
LM48035TP10	End cap for single track	1 Pc

Art.	LV max	Qty
LMC36GPPK11F.200	**1960** mm	1 Pc

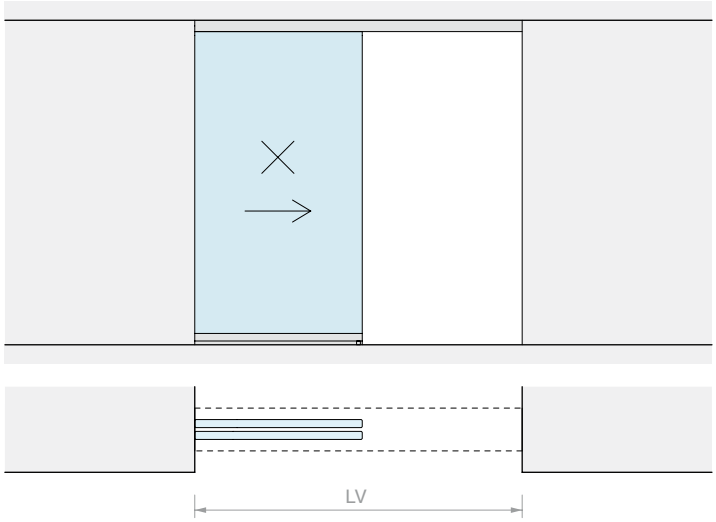
LV

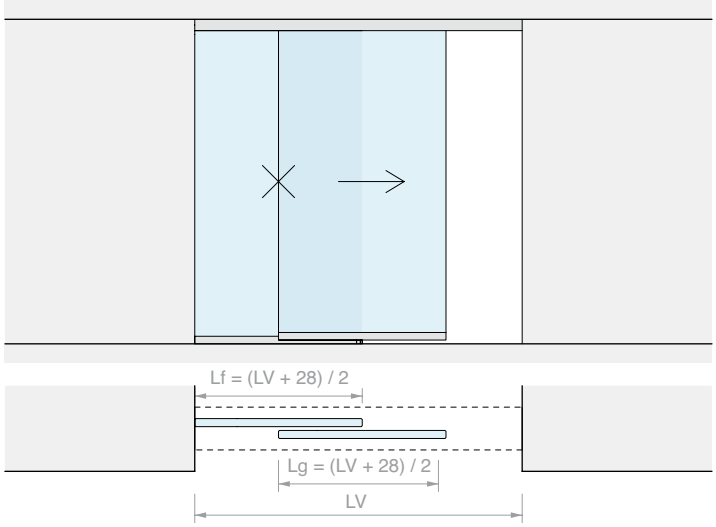
Lf = (LV + 28) / 2
Lg = (LV + 28) / 2
LV

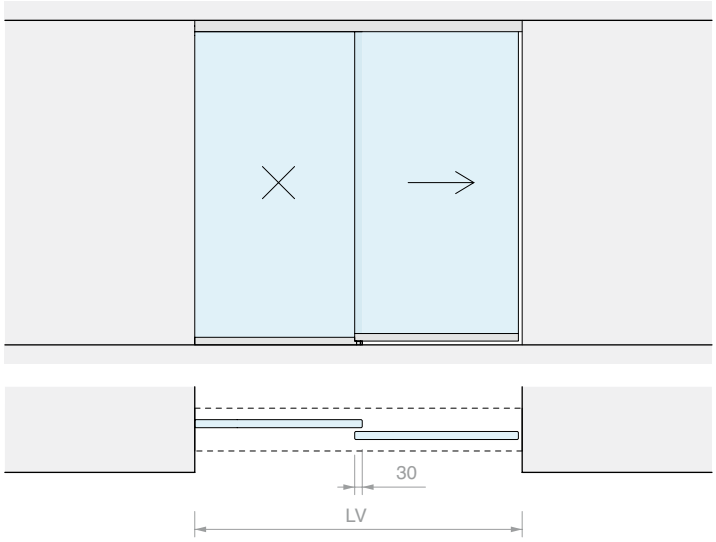
30
LV

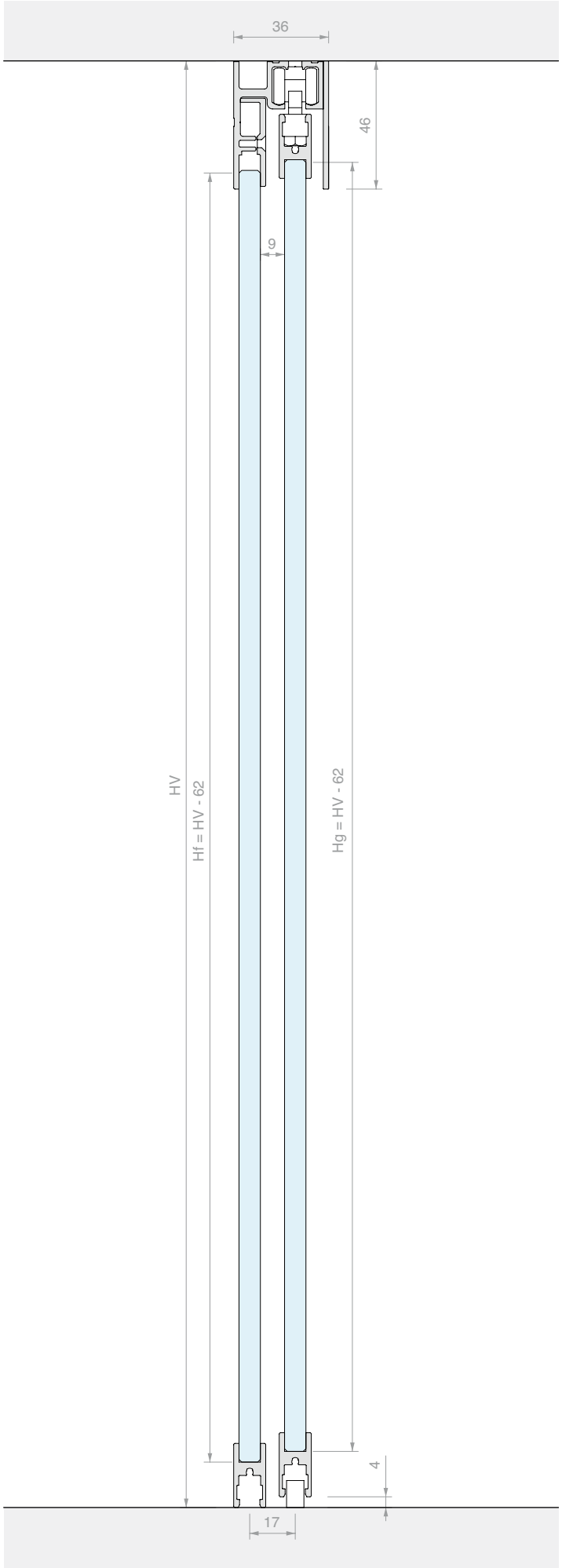
36
46
9
HV
Hf = HV - 62
Hg = HV - 62
4
17

CEILING FIXING SLIDING DOOR KIT
DOUBLE DOORS WITH DOUBLE FIXED GLASS
WITH GPPK LOWER GLASS HOLDER PROFILE

Material: Aluminium
Finish: /6 /88 /97

WITHOUT HOLES IN THE GLASS

DOOR OPENING SIZE

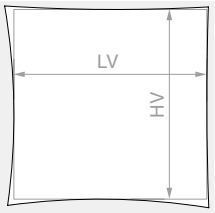

HV max: **2160** mm

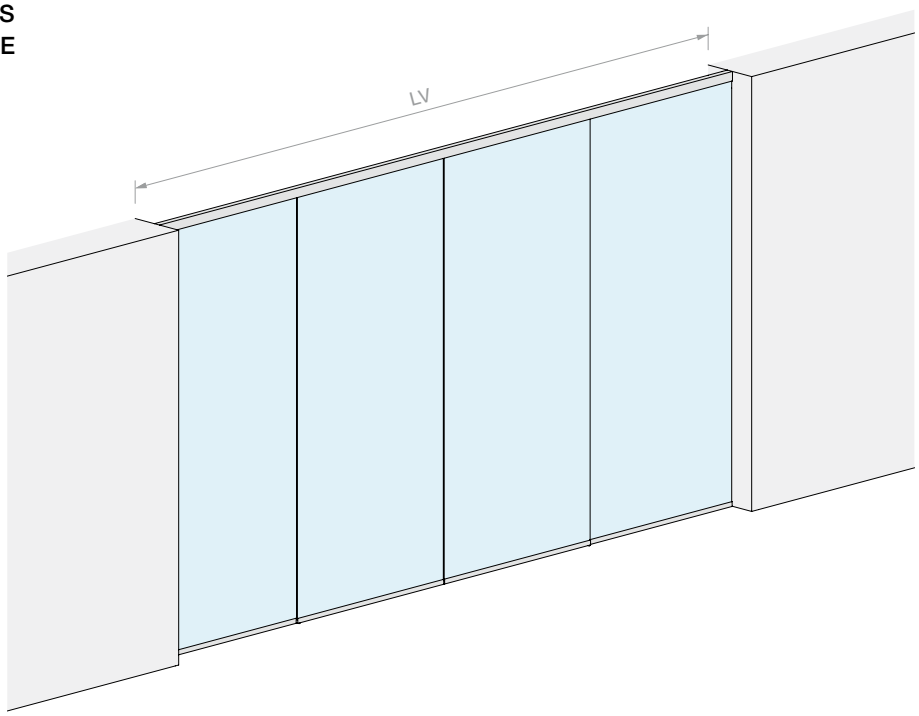

DOOR PANEL PANE

FIXED PANE

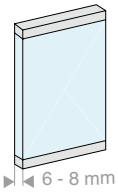

Kit comprising:

Art.	Description	Qty
053.3338.400	Ceiling fixing single track with fixed glass	1 Pc
053.3072.200	Glass holder profile	3 Pcs
053.3071.300	Support profile for fixed glass	2 Pcs
053.3361.072	GPPK sliding door panel kit	2 Pcs
053.3075.300	Track cover	2 Pcs
VIT965-3X8-ZN	Fixing screw for fixed glass support profile	8 Pcs

Optional

057.3159.071	2 dampers up to 15 kg	1 Pc
057.3159.072	2 dampers up to 26 kg	1 Pc
057.3159.073	2 dampers up to 36 kg	1 Pc
LM48035TP10	End cap for single track	1 Pc

Art.	LV max	Qty
LMC36GPPK11CF.400	**3920** mm	1 Pc

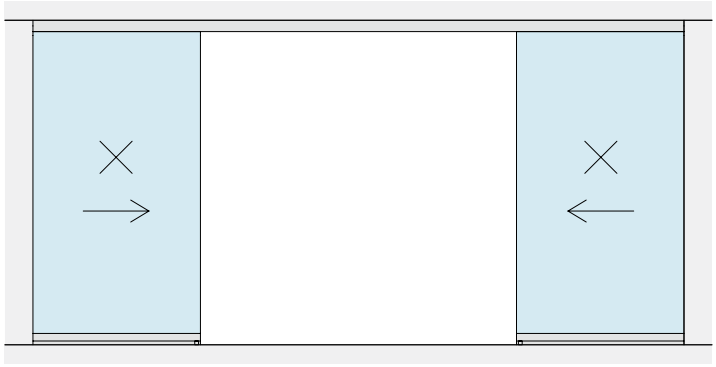

LV

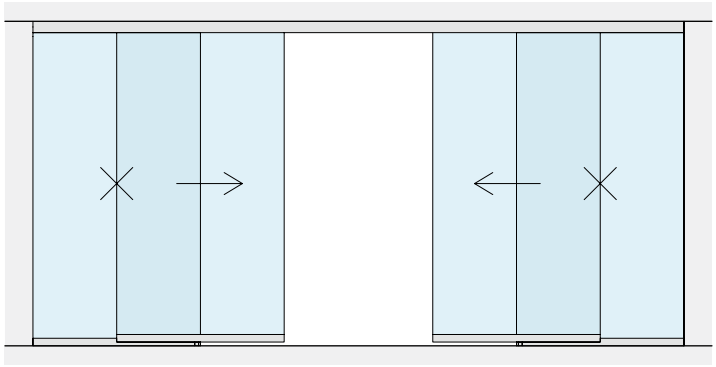

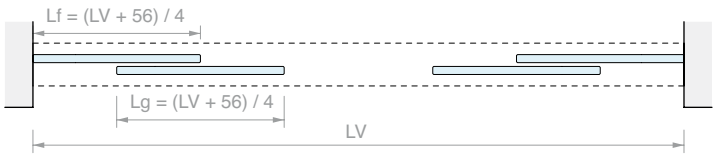
Lf = (LV + 56) / 4
Lg = (LV + 56) / 4
LV

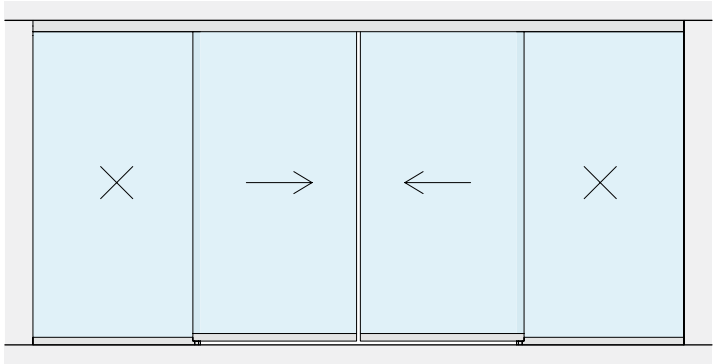

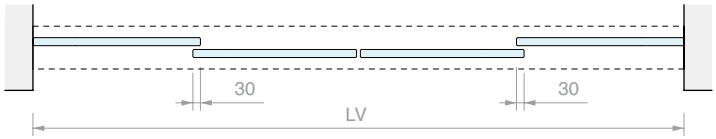
30
30
LV

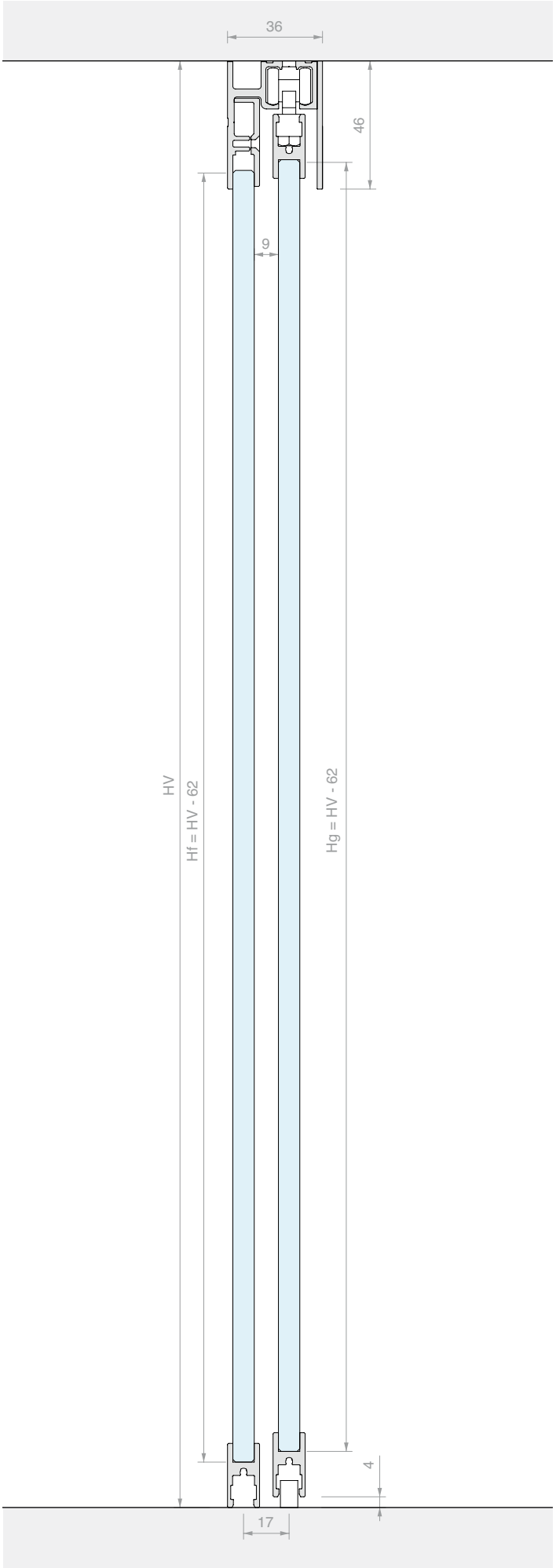
36
46
9
HV
Hf = HV - 62
Hg = HV - 62
4
17

WHITE

WALL FIXING SLIDING DOOR KIT
WITH GPPK LOWER GLASS HOLDER PROFILE

Material: Aluminium
Finish: /6 /88 /97

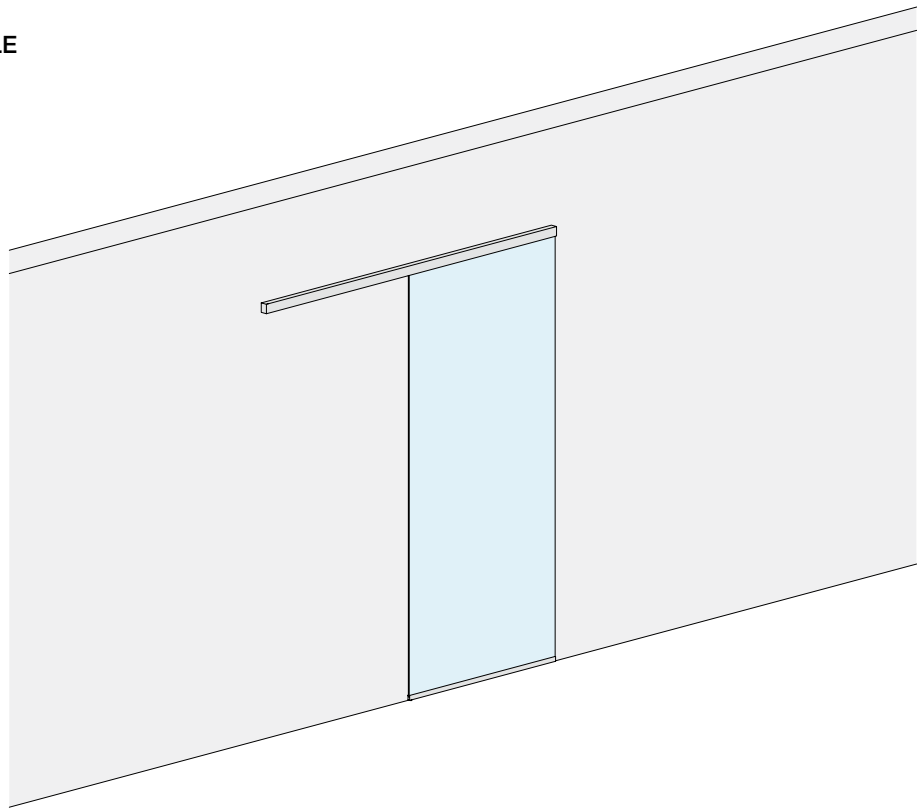

DOOR OPENING SIZE

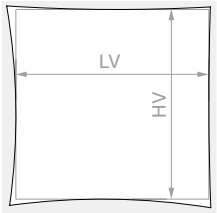

HV max: **2110** mm

DOOR PANEL PANE

Kit comprising:

Art.	Description	Qty
053.3338.200	Wall fixing single track	1 Pc
053.3072.200	Glass holder profile	1 Pc
053.3071.300	Support profile for fixed glass	1 Pc
053.3361.072	GPPK sliding door panel kit	1 Pc
053.3075.300	Track cover	1 Pc
VIT965-3X8-ZN	Fixing screw for fixed glass support profile	4 Pcs

Optional

057.3159.071	2 dampers up to 15 kg	1 Pc
057.3159.072	2 dampers up to 26 kg	1 Pc
057.3159.073	2 dampers up to 36 kg	1 Pc
LM17019TP10	End cap for single track	1 Pc

Art.	LV max	Qty
LMC36GPPK21.200	**940** mm	1 Pc

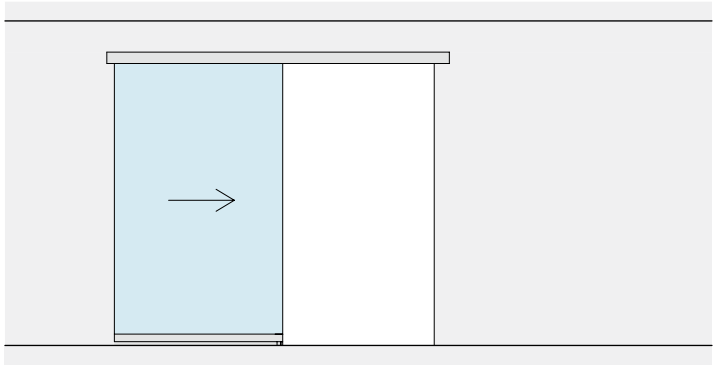

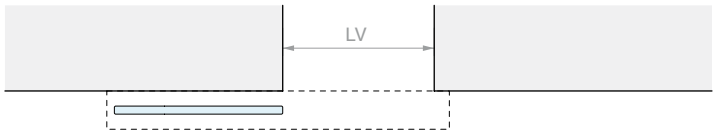
LV

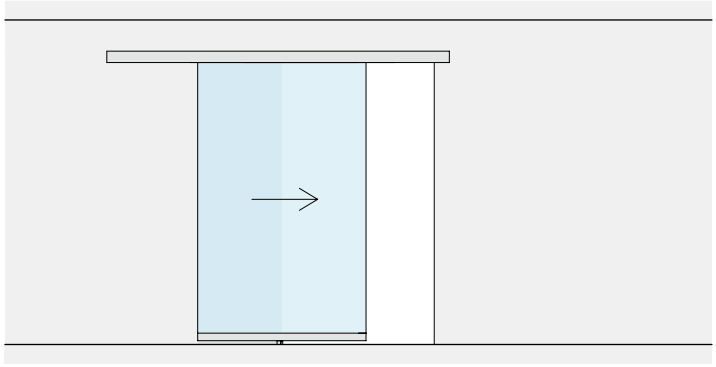

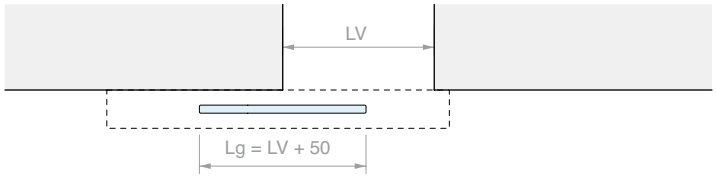
LV
Lg = LV + 50

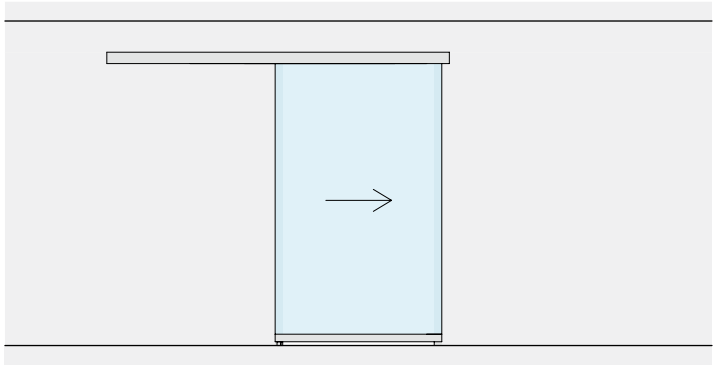

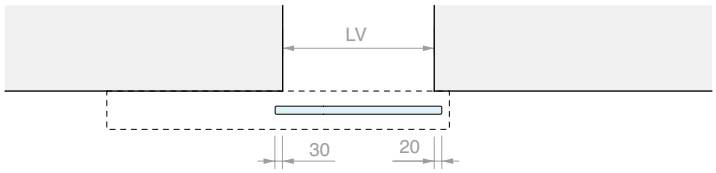
LV
30
20

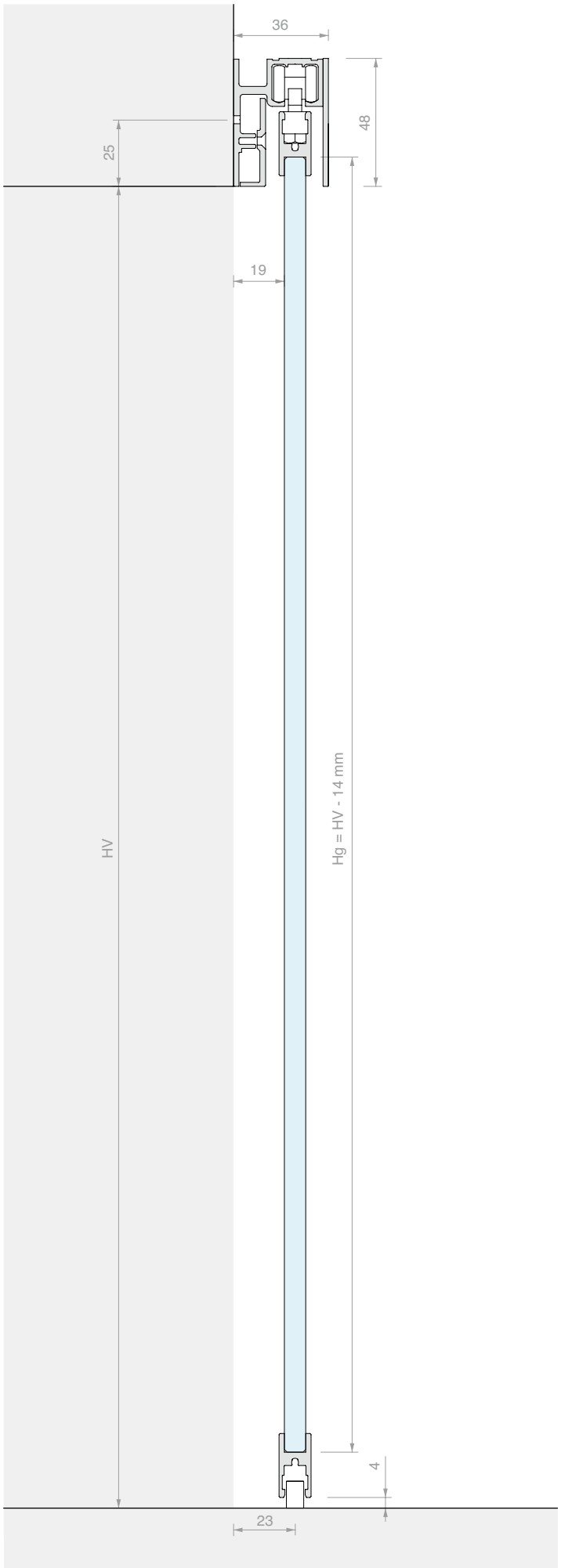
36
48
25
19
HV
Hg = HV - 14 mm
4
23

WALL FIXING SLIDING DOOR KIT
DOUBLE DOORS WITH GPPK LOWER GLASS HOLDER PROFILE

Material: Aluminium
Finish: /6 /88 /97

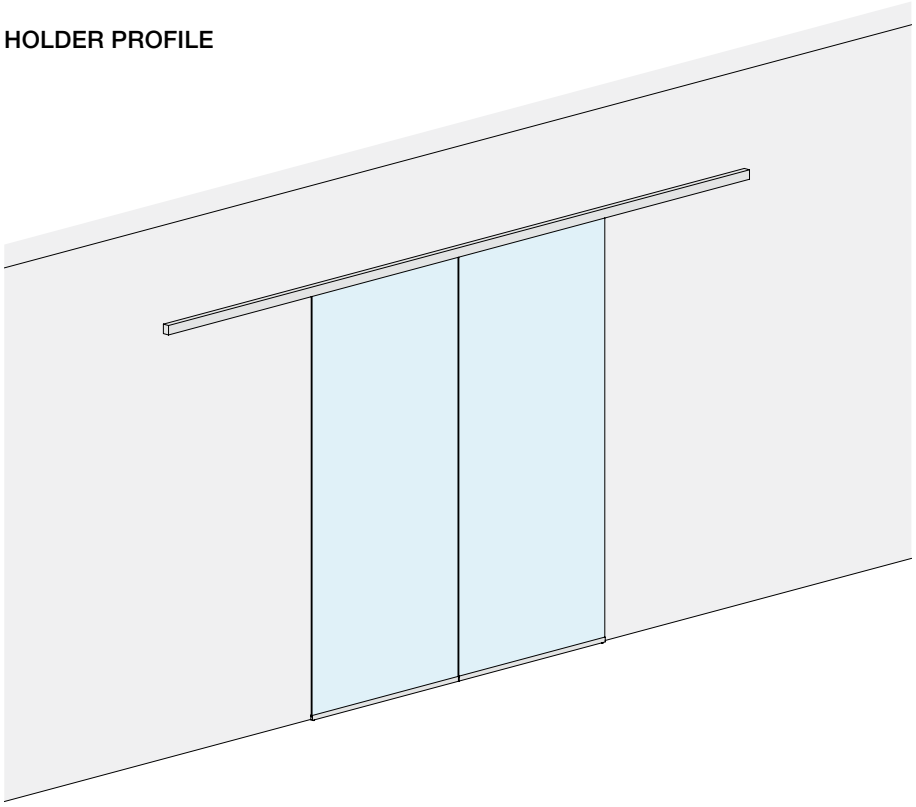

DOOR OPENING SIZE

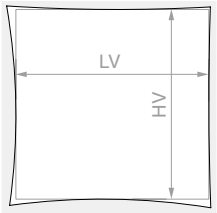

HV max: **2110** mm

DOOR PANEL PANE

Kit comprising:

Art.	Description	Qty
053.3338.400	Wall fixing single track	1 Pc
053.3072.200	Glass holder profile	2 Pcs
053.3071.300	Support profile for fixed glass	2 Pcs
053.3361.072	GPPK sliding door panel kit	2 Pcs
053.3075.300	Track cover	2 Pcs
VIT965-3X8-ZN	Fixing screw for fixed glass support profile	8 Pcs

Optional

057.3159.071	2 dampers up to 15 kg	1 Pc
057.3159.072	2 dampers up to 26 kg	1 Pc
057.3159.073	2 dampers up to 36 kg	1 Pc
LM48035TP10	End cap for single track	1 Pc

Art.	LV max	Qty
LMC36GPPK21C.400	**1930** mm	1 Pc

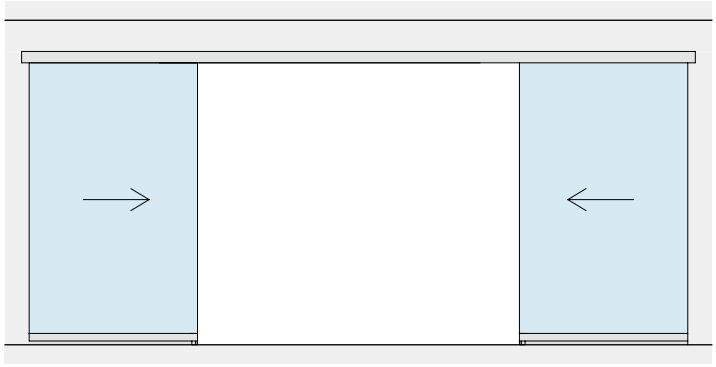

LV

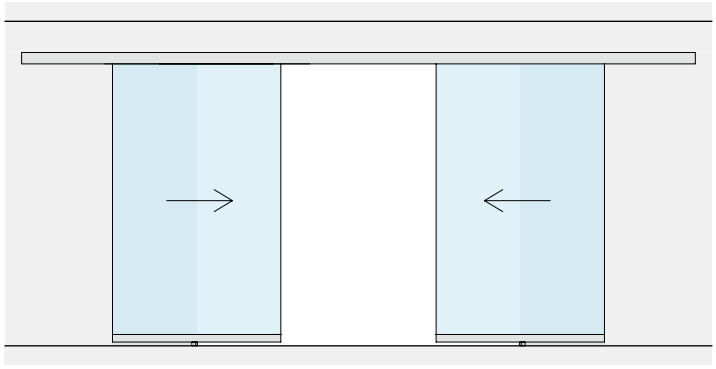

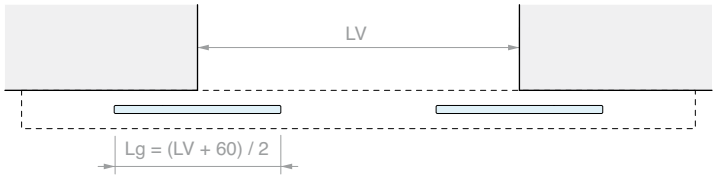
LV
Lg = (LV + 60) / 2

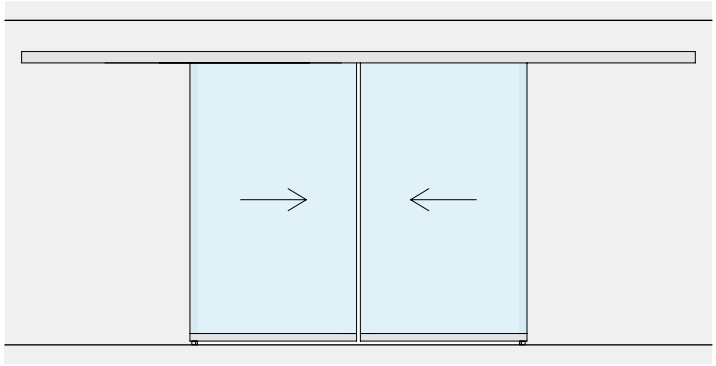

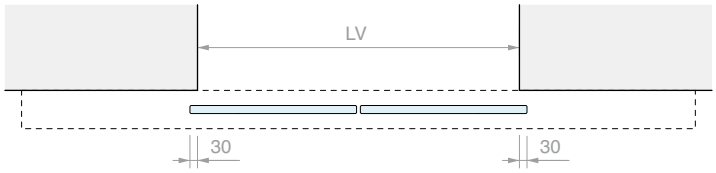
LV
30
30

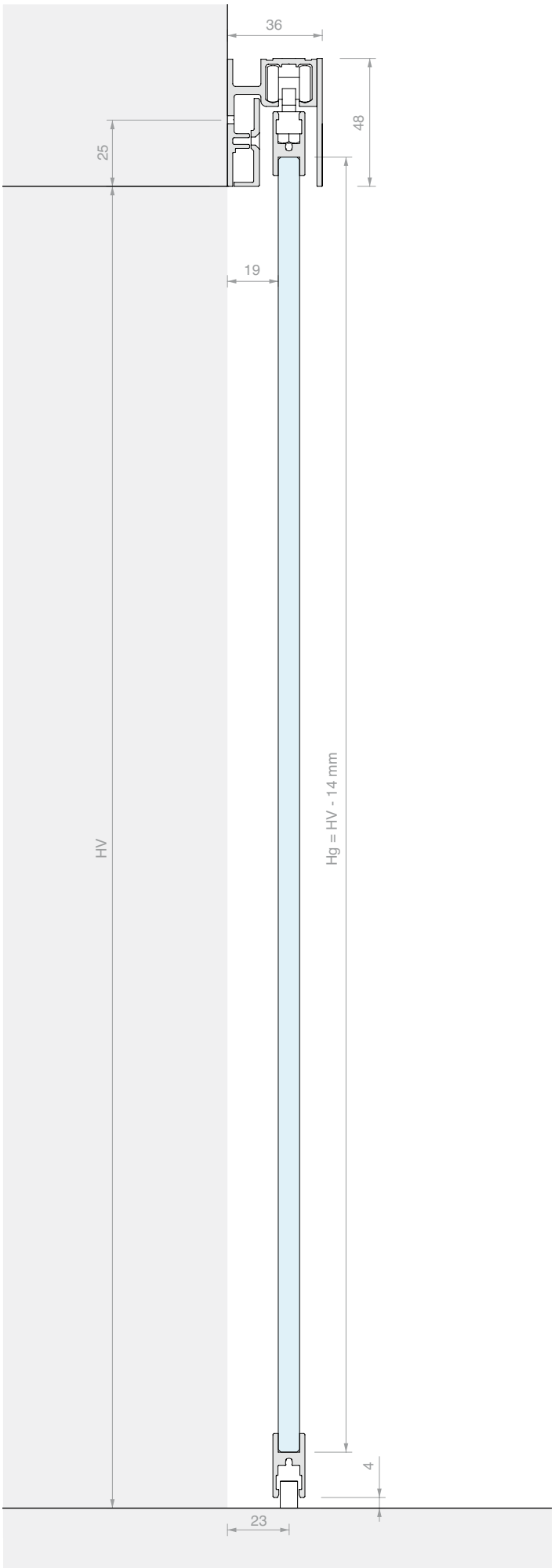
36
48
25
19
HV
Hg = HV - 14 mm
4
23

WHITE

GPK WALL FIXING SLIDING DOOR KIT
SINGLE DOOR PANEL

Material: Aluminium
Finish: /6 /88 /97

DOOR OPENING SIZE

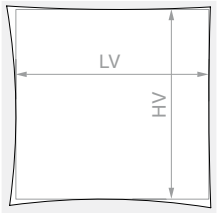

HV max: **2090** mm

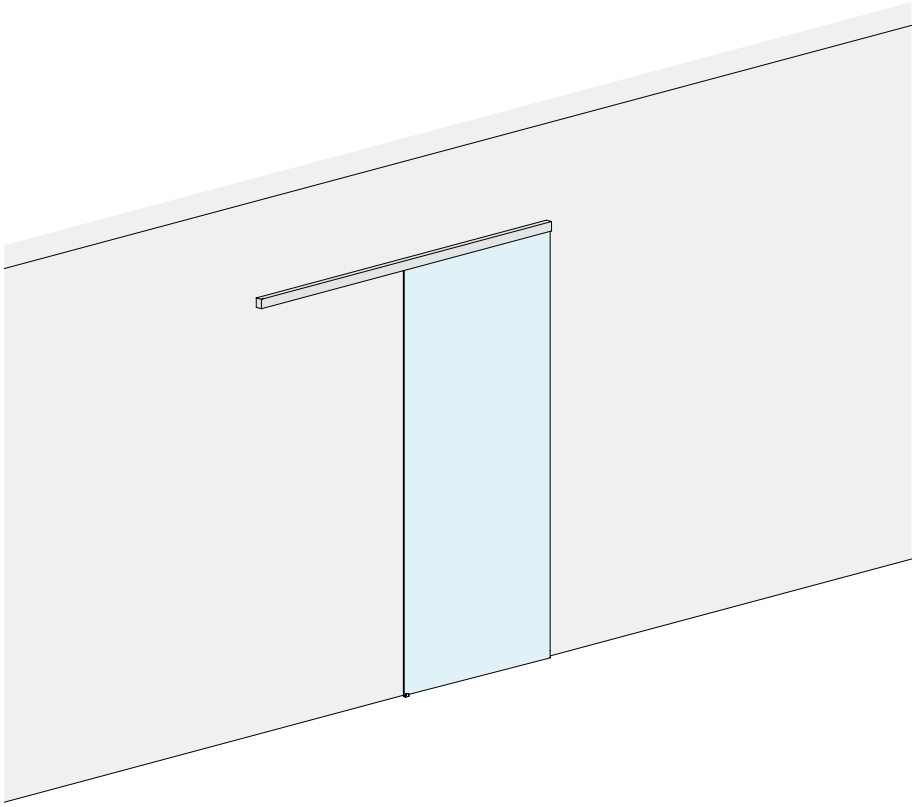

DOOR PANEL PANE

Kit comprising:

Art.	Description	Qty
053.3338.200	Wall fixing single track	1 Pc
053.3072.100	Glass holder profile	1 Pc
053.3071.300	Support profile for fixed glass	1 Pc
053.3361.071	GPK sliding door panel kit	1 Pc
053.3075.300	Track cover	1 Pc
VIT965-3X8-ZN	Fixing screw for fixed glass support profile	4 Pcs

Optional

057.3159.071	2 dampers up to 15 kg	1 Pc
057.3159.072	2 dampers up to 26 kg	1 Pc
057.3159.073	2 dampers up to 36 kg	1 Pc
LM48035TP10	End cap for single track	1 Pc

Art.	LV max	Qty
LMC36GPK21.200	**940** mm	1 Pc

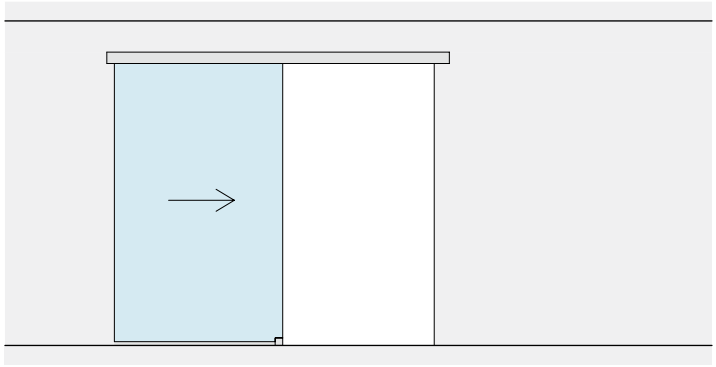

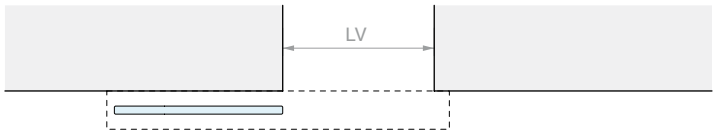
LV

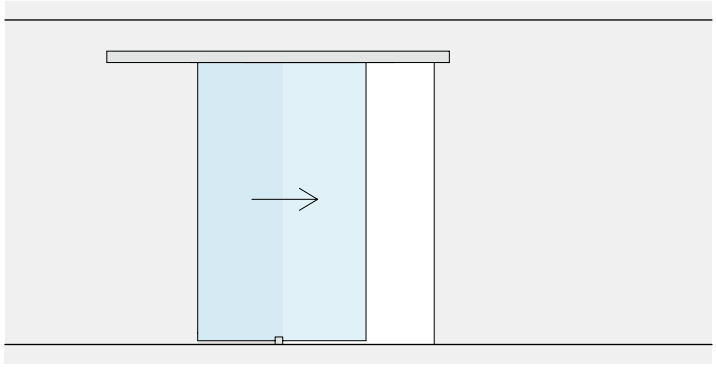

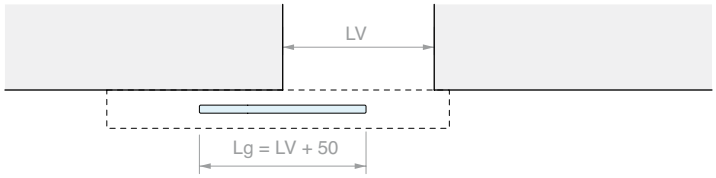
LV
Lg = LV + 50

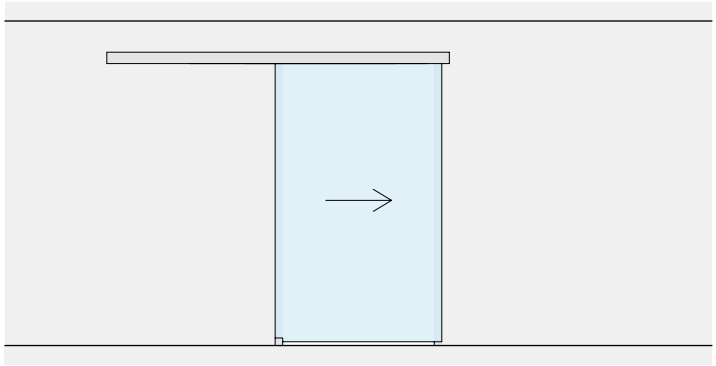

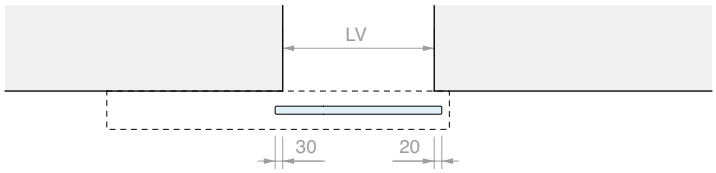
LV
30
20

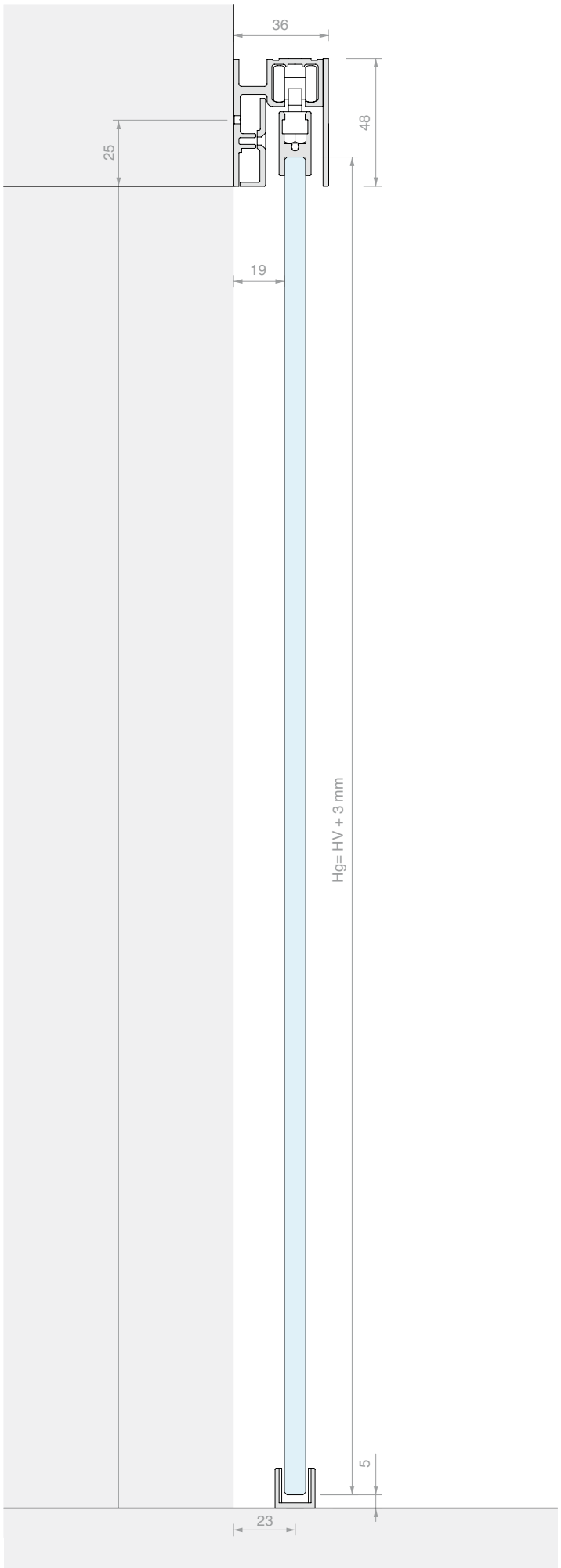
36
48
25
19
Hg= HV + 3 mm
5
23

GPK WALL FIXING SLIDING DOOR KIT DOUBLE DOORS

Material: Aluminium
Finish: /6 /88 /97

WITHOUT HOLES IN THE GLASS

DOOR OPENING SIZE

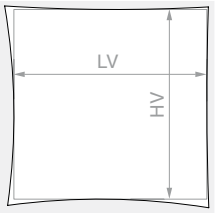

HV max: **2090** mm

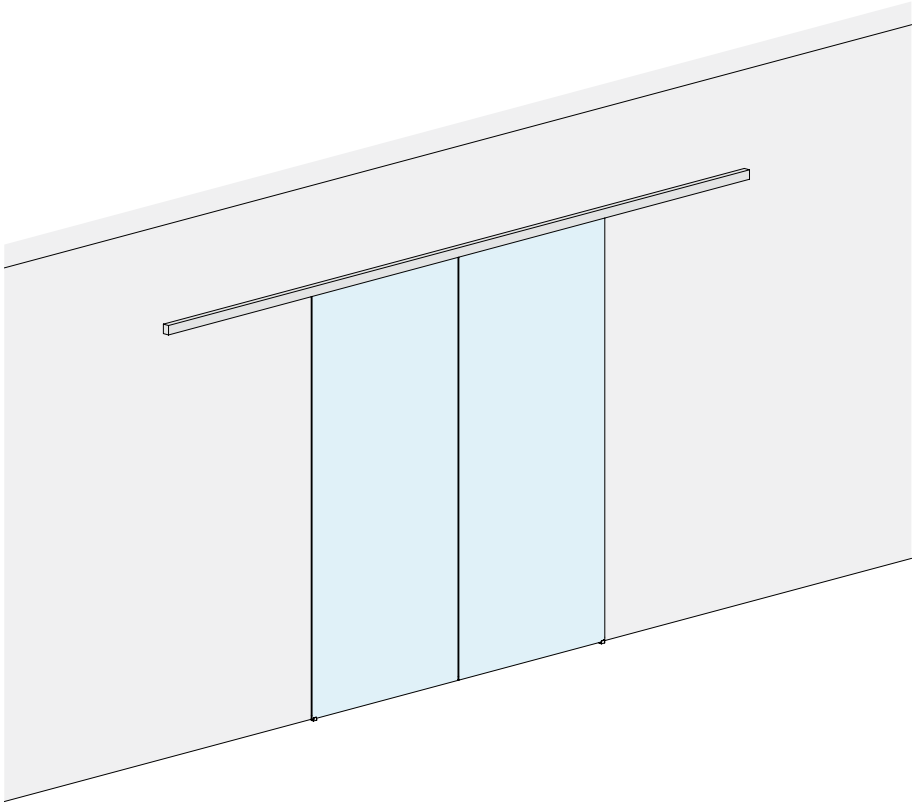

DOOR PANEL PANE

Kit comprising:

Art.	Description	Qty
053.3338.400	Wall fixing single track	1 Pc
053.3072.200	Glass holder profile	1 Pc
053.3071.300	Support profile for fixed glass	2 Pcs
053.3361.071	GPK sliding door panel kit	2 Pcs
053.3075.300	Track cover	2 Pcs
VIT965-3X8-ZN	Fixing screw for fixed glass support profile	8 Pcs

Optional

057.3159.071	2 dampers up to 15 kg	1 Pc
057.3159.072	2 dampers up to 26 kg	1 Pc
057.3159.073	2 dampers up to 36 kg	1 Pc
LM48035TP10	End cap for single track	1 Pc

Art.	LV max	Qty
LMC36GPK21C.400	**1930** mm	1 Pc

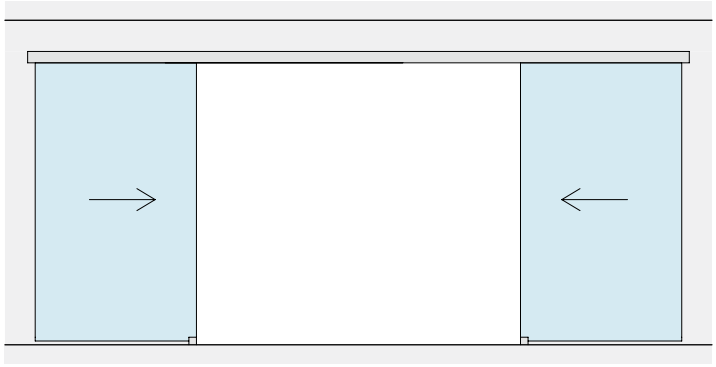

LV

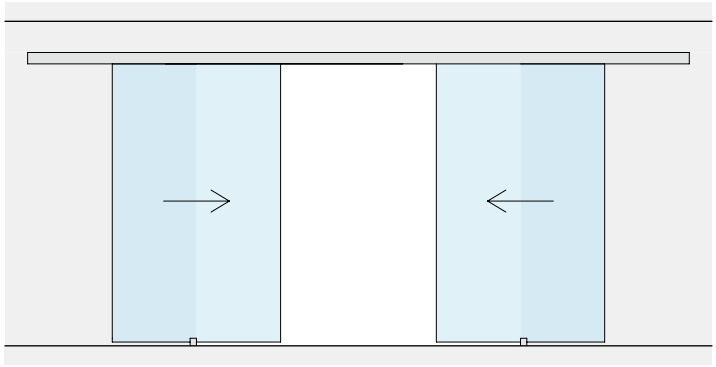

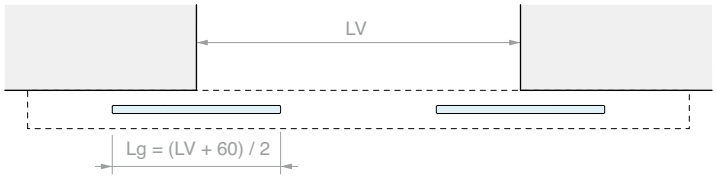
LV
Lg = (LV + 60) / 2

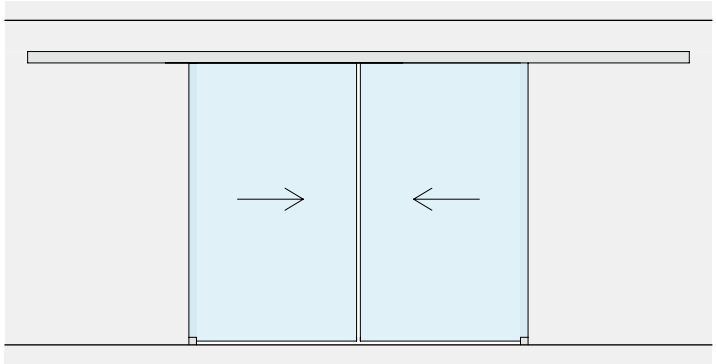

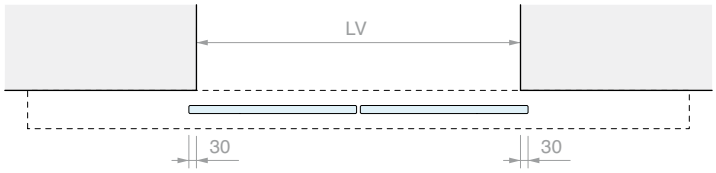
LV
30
30

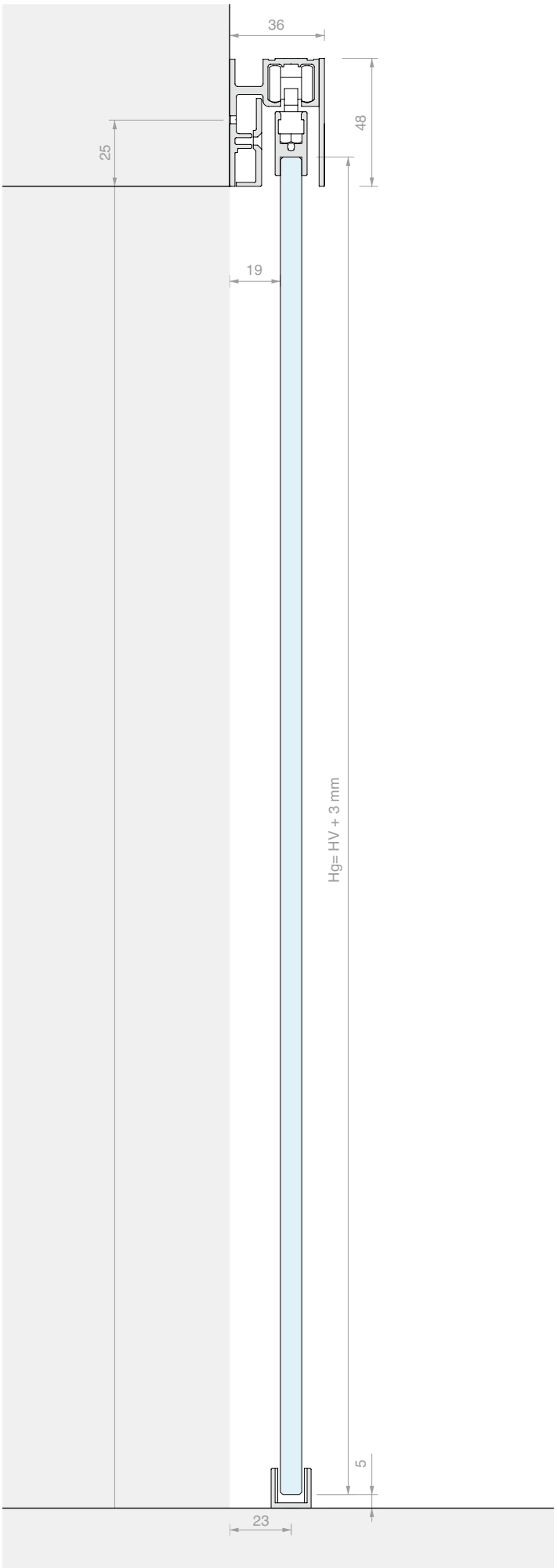
36
48
25
19
Hg= HV + 3 mm
5
23

WHITE

WALL FIXING SLIDING DOOR KIT
SINGLE DOOR WITH FIXED GLASS
WITH GPPK LOWER GLASS HOLDER PROFILE

Material: Aluminium
Finish: /6 /88 /97

WITHOUT HOLES IN THE GLASS

DOOR OPENING SIZE

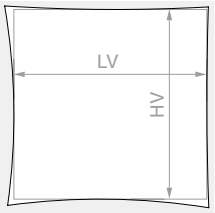

HV max: **2110** mm

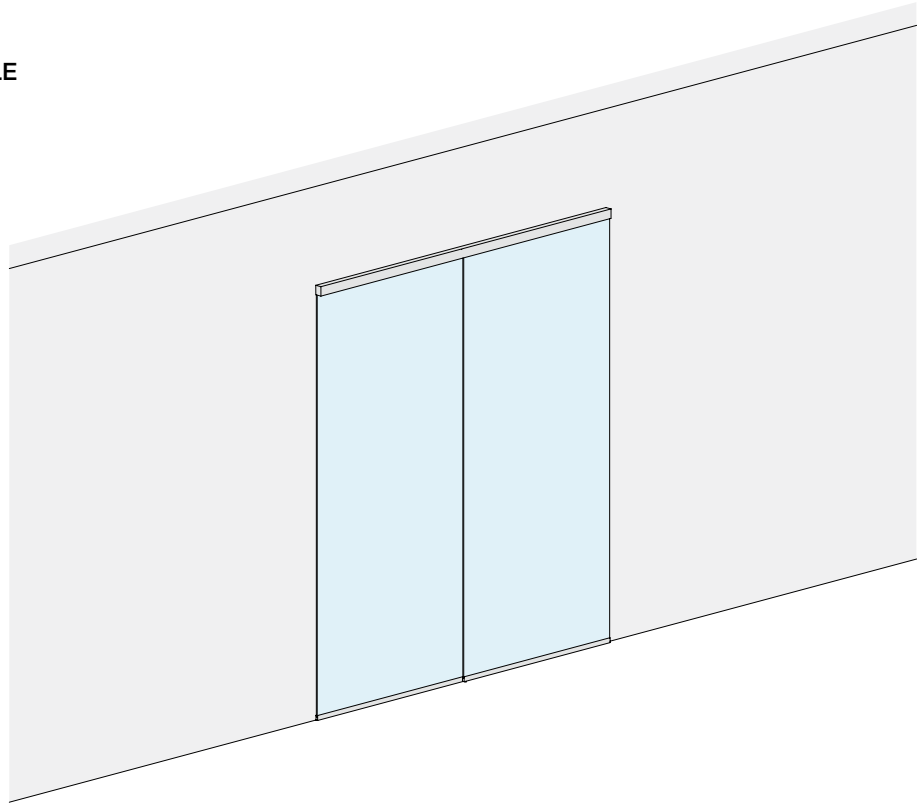

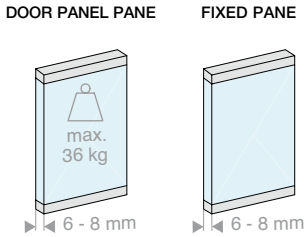

Kit comprising:

Art.	Description	Qty
053.3338.200	Wall fixing single track with fixed glass	1 Pc
053.3072.200	Glass holder profile	1 Pc
053.3072.100	Glass holder profile	1 Pc
053.3071.300	Support profile for fixed glass	1 Pc
053.3361.072	GPPK sliding door panel kit	1 Pc
053.3075.300	Track cover	1 Pc
VIT965-3X8-ZN	Fixing screw for fixed glass support profile	4 Pcs

Optional

057.3159.071	2 dampers up to 15 kg	1 Pc
057.3159.072	2 dampers up to 26 kg	1 Pc
057.3159.073	2 dampers up to 36 kg	1 Pc
LM48035TP10	End cap for single track	1 Pc

Art.	LV max	Qty
LMC36GPPK21F.200	**1920** mm	1 Pc

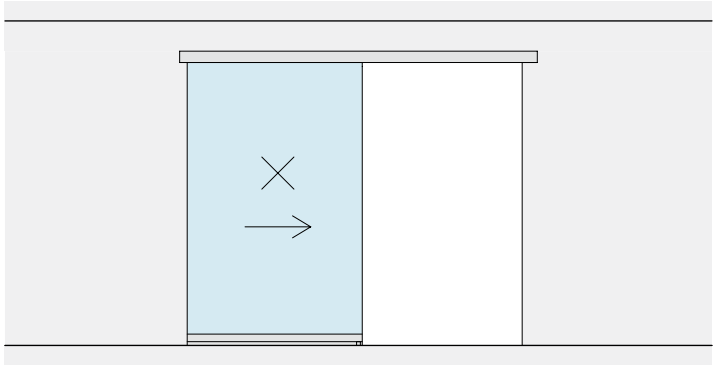

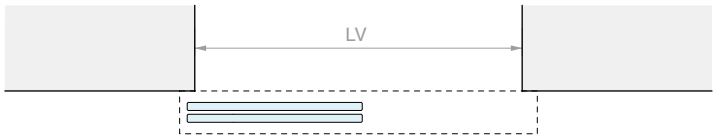
LV

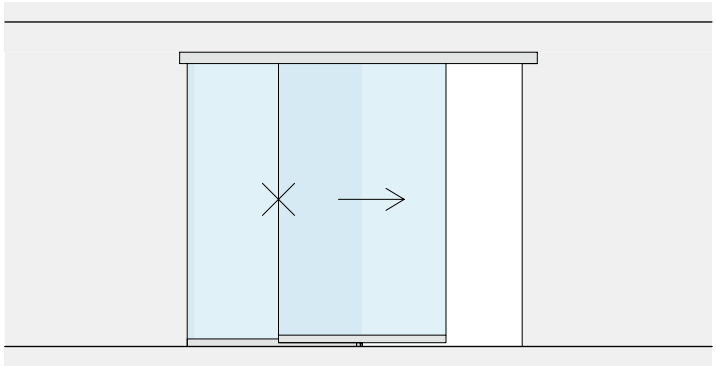

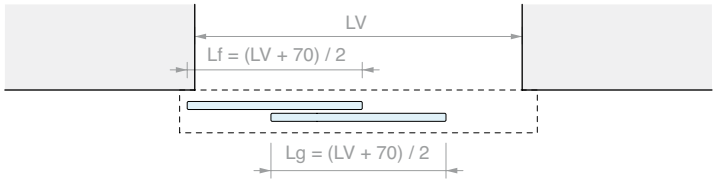
LV
Lf = (LV + 70) / 2
Lg = (LV + 70) / 2

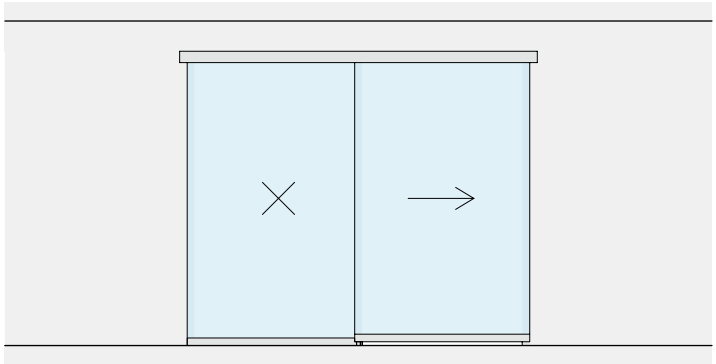

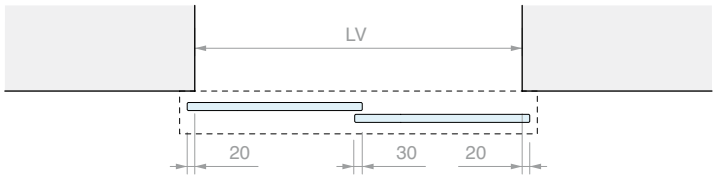
LV
20
30
20

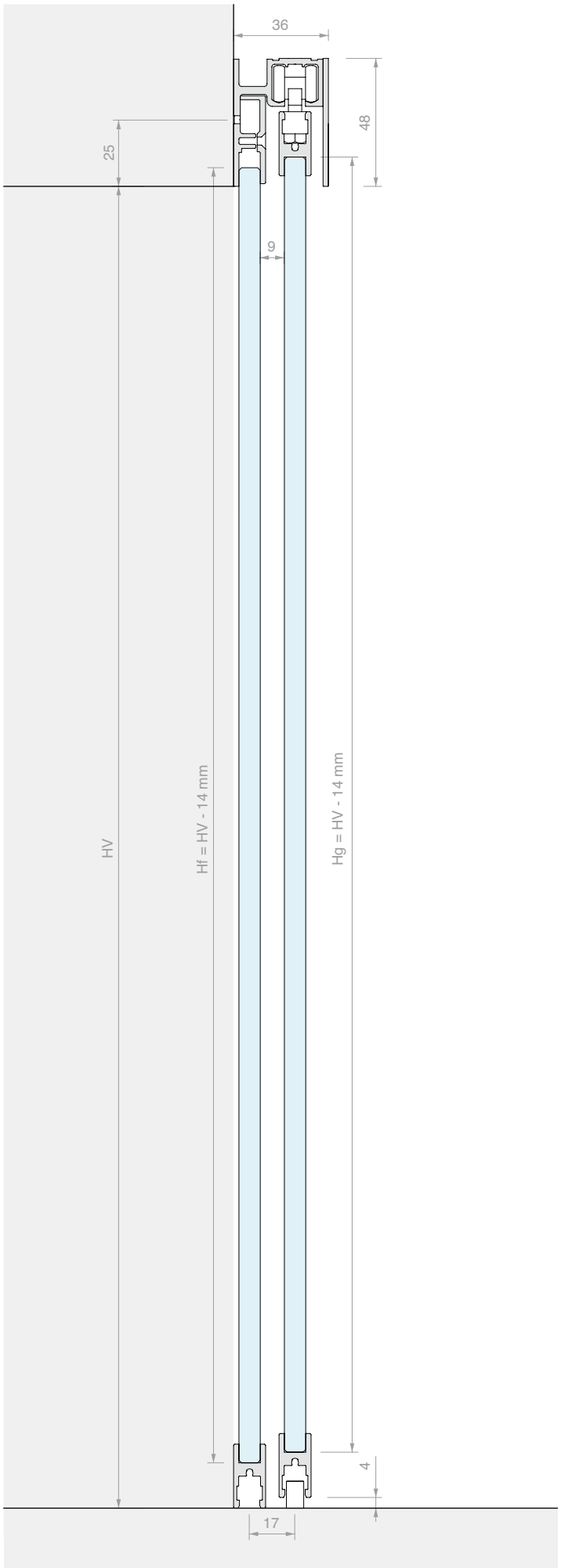
36
48
25
9
HV
Hf = HV - 14 mm
Hg = HV - 14 mm
4
17

WALL FIXING SLIDING DOOR KIT
DOUBLE DOORS WITH DOUBLE FIXED GLASS
WITH GPPK LOWER GLASS HOLDER PROFILE

Material: Aluminium
Finish: /6 /88 /97

WITHOUT HOLES IN THE GLASS

DOOR OPENING SIZE

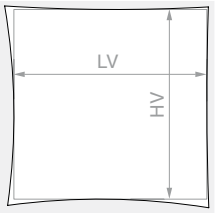

HV max: **2110** mm

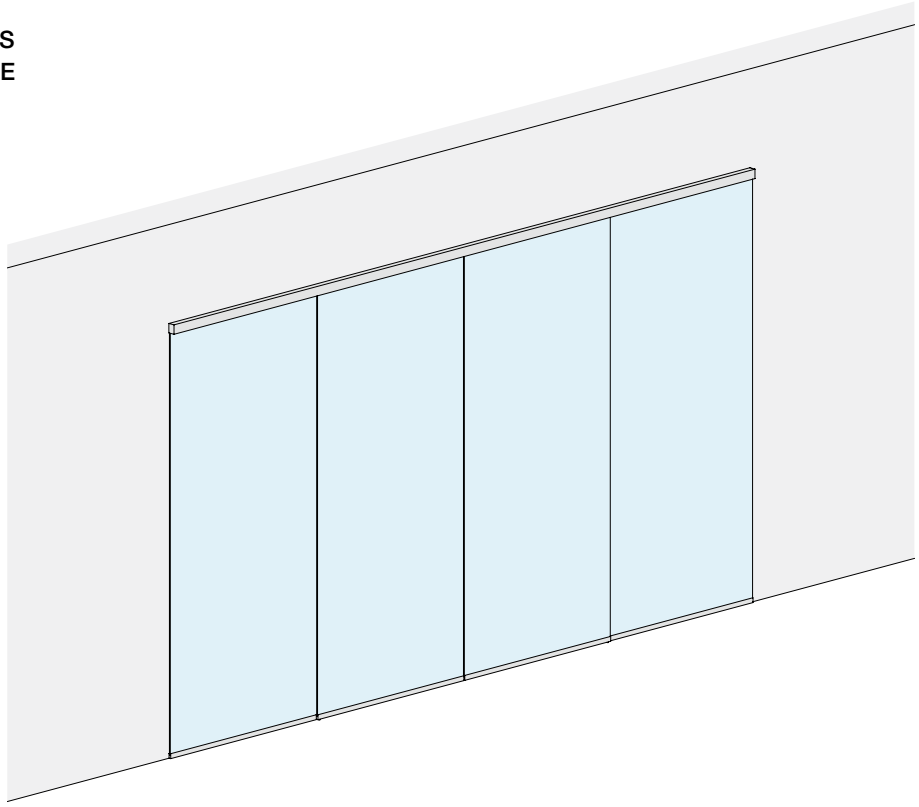

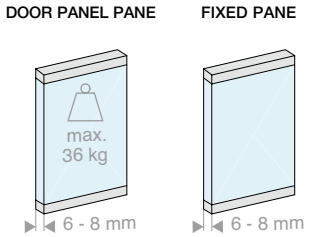

Kit comprising:

Art.	Description	Qty
053.3338.400	Ceiling fixing single track with fixed glass	1 Pc
053.3072.200	Glass holder profile	3 Pcs
053.3071.300	Support profile for fixed glass	2 Pcs
053.3361.072	GPPK sliding door panel kit	2 Pcs
053.3075.300	Track cover	2 Pcs
VIT965-3X8-ZN	Fixing screw for fixed glass support profile	8 Pcs

Optional

057.3159.071	2 dampers up to 15 kg	1 Pc
057.3159.072	2 dampers up to 26 kg	1 Pc
057.3159.073	2 dampers up to 36 kg	1 Pc
LM48035TP10	End cap for single track	1 Pc

Art.	LV max	Qty
LMC36GPPK21CF.400	**3880** mm	1 Pc

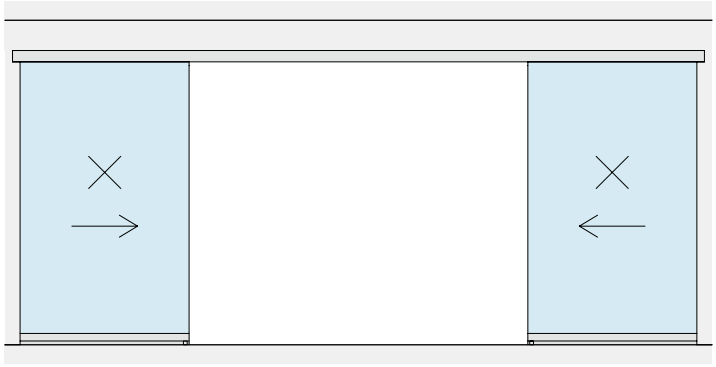

LV

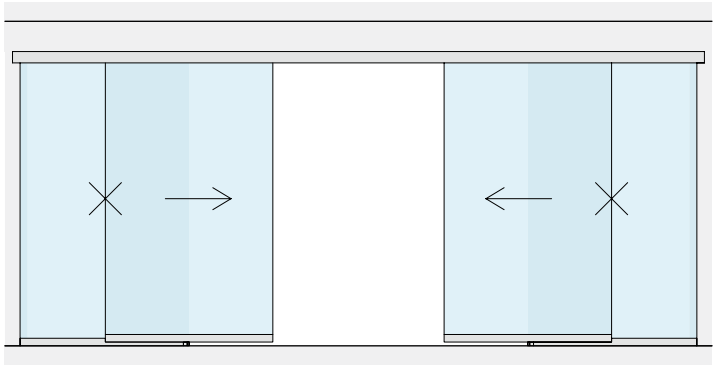

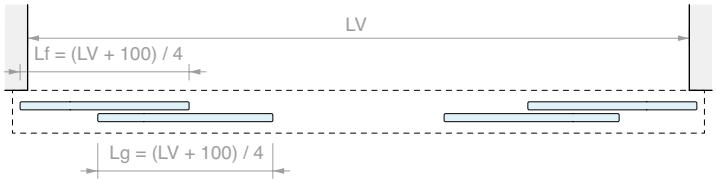
LV
Lf = (LV + 100) / 4
Lg = (LV + 100) / 4

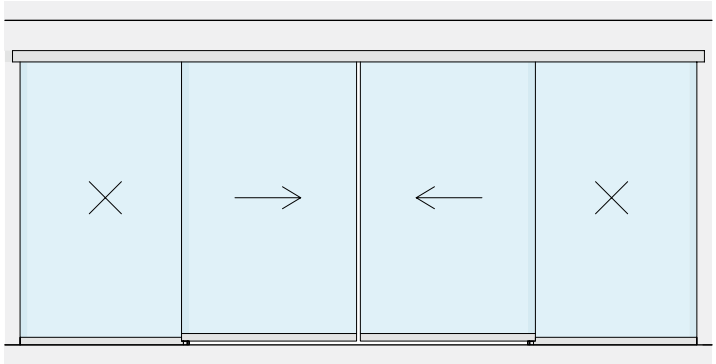

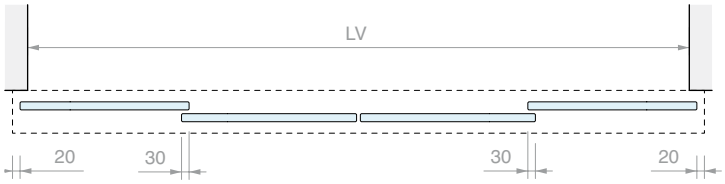
LV
20
30
30
20

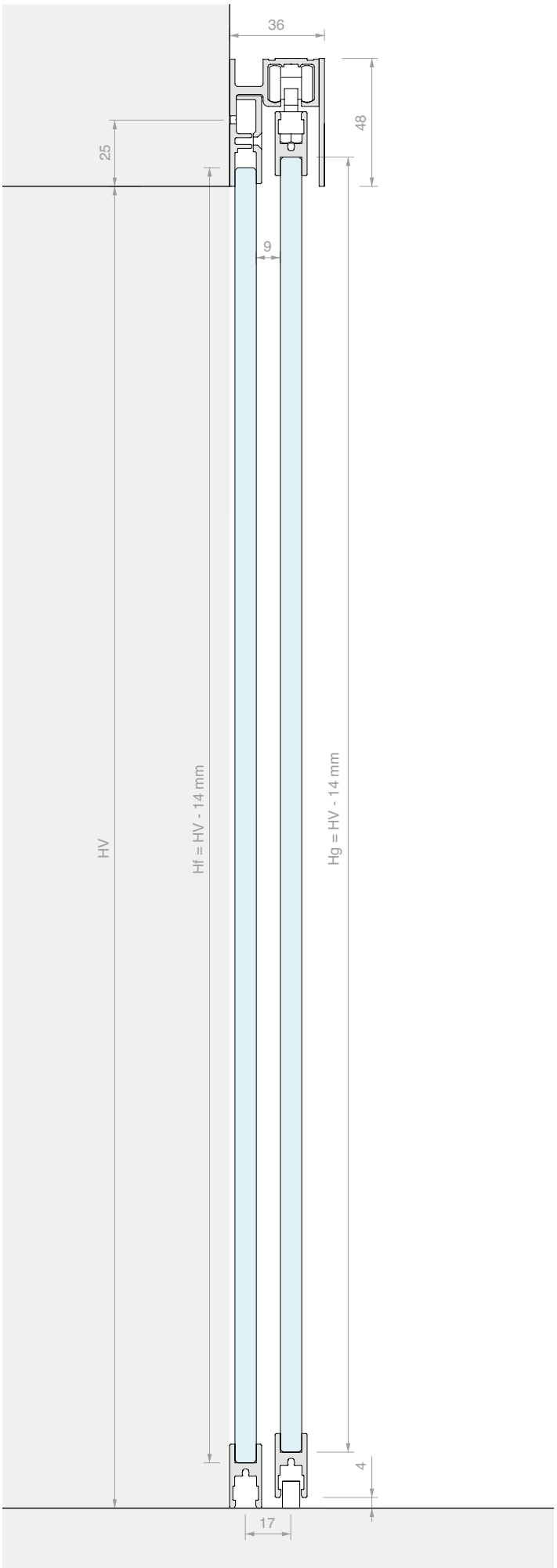
36
48
25
9
HV
Hf = HV - 14 mm
Hg = HV - 14 mm
4
17

CLIPO 36 DOUBLE TRACK FOR FLUSH MOUNTING

Material: Aluminium

Pre-drilled profile with 150-mm hole pitch

Finish: /6 /88 /97

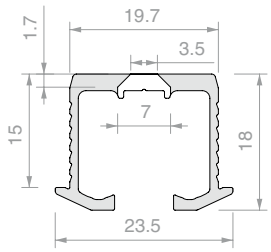

Art.	Length	Qty
053.3324.200	**1997** mm	1 Pc
053.3324.300	**2998** mm	1 Pc
053.3324.600	**6000** mm	1 Pc

CLIPO 36 SINGLE TRACK FOR CEILING MOUNTING

Material: Aluminium

Pre-drilled profile with 150-mm hole pitch

Finish: /6 /88 /97

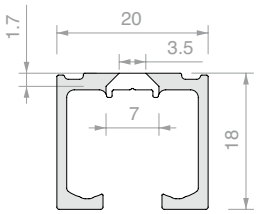

Art.	Length	Qty
053.3326.200	**1997** mm	1 Pc
053.3326.300	**2998** mm	1 Pc
053.3326.400	**3998** mm	1 Pc
053.3326.600	**6000** mm	1 Pc

CLIPO 36 DOUBLE TRACK FOR FLUSH MOUNTING

Material: Aluminium

Pre-drilled profile with 150-mm hole pitch

Finish: /6 /88 /97

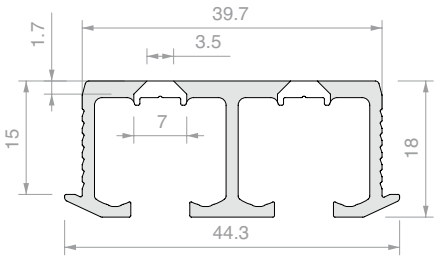

Art.	Length	Qty
053.3342.200	**1997** mm	1 Pc
053.3342.300	**2998** mm	1 Pc
053.3342.600	**6000** mm	1 Pc

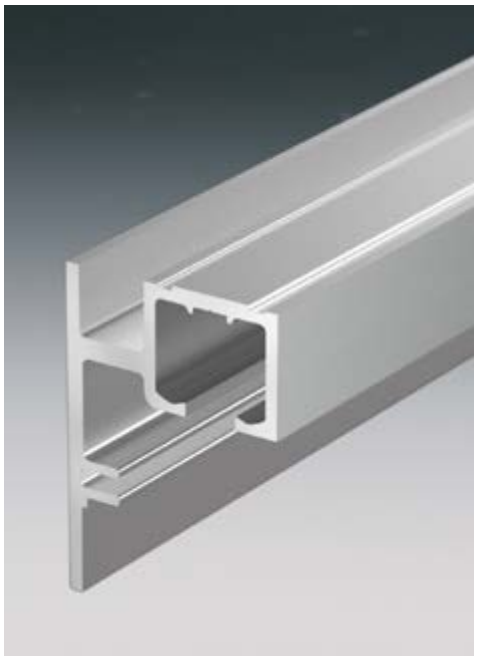

SINGLE TRACK FOR WALL OR CEILING FIXING WITH OR WITHOUT FIXED GLASS CLIPO 36

Material: Aluminium

Pre-drilled ceiling profile with 150-mm hole pitch.

For wall mounting, drill following the guide provided

Finish: /6 /88 /97

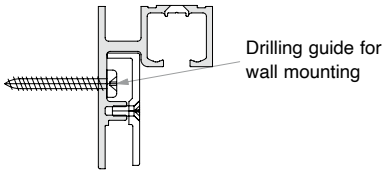

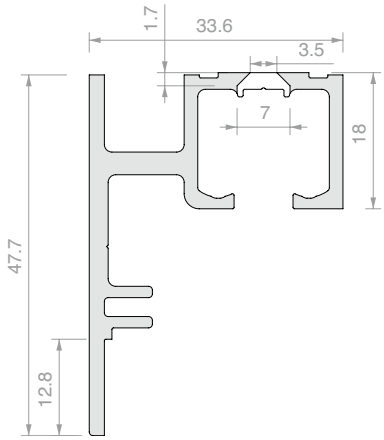

Art.	Length	For glass	Qty
053.3338.200	**1997** mm	From **6** to **8** mm	1 Pc
053.3338.300	**2998** mm	From **6** to **8** mm	1 Pc
053.3338.400	**3998** mm	From **6** to **8** mm	1 Pc
053.3338.600	**6000** mm	From **6** to **8** mm	1 Pc

CLIPO 36 GLASS-HOLDER PROFILE

Material: Aluminium

Finish: /6 /88 /97

Note: Apply silicone along the entire length of the profile.

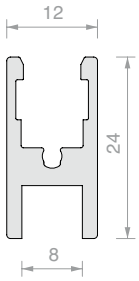

Art.	Length	For glass	Qty
053.3072.100	**996** mm	From **6** to **8** mm	1 Pc
053.3072.200	**1997** mm	From **6** to **8** mm	1 Pc
053.3072.300	**2998** mm	From **6** to **8** mm	1 Pc
053.3072.600	**6000** mm	From **6** to **8** mm	1 Pc

CLIPO 36 SUPPORT PROFILE FOR FIXED GLASS

Material: Aluminium

Finish: /6 /88 /97

Note: To fix the profile to the track,
use M3 x 8 mm screws Art. **VIT965-3x8-ZN**

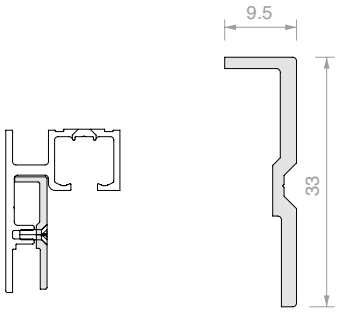

Art.	Length	Qty
053.3071.300	**3000** mm	1 Pc

CLIPO 36 COVER FOR TRACK 053.3338

Materiale: Aluminium

Finish: /6 /88 /97

Note: Apply using double-sided adhesive along the entire length.

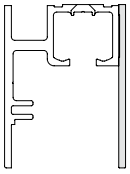

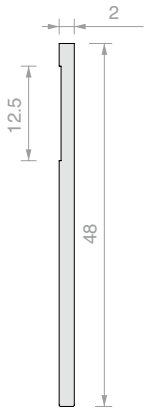

Art.	Length	Qty
053.3075.300	**3000** mm	1 Pc

CLIPO 36 GPPK DOOR SLIDING KIT

The kit requires glass-holder profile 053.3072 both above and below.

Side caps included only in black finish.

Art.	For glass	Qty
053.3361.072	From **6** to **8** mm	1 Pc

CLIPO 36 GPK DOOR SLIDING KIT

The kit requires glass-holder profile 053.3072 only above.

Side caps included only in black finish.

Finish: /3 /97 /R2

Art.	For glass	Qty
053.3361.071	From **6** to **8** mm	1 Pc

LOWER GUIDE FOR CLIPO 36 GPK

Material: Brass

Finish: /3 /97 /R2

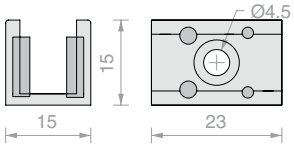

Art.	For glass	Qty
LMGF15	From **6** to **8** mm	1 Pc

2 CLIPO 36 DAMPENERS

Minimum leaf width to install 1 dampener 420 mm

Minimum leaf width to install 2 dampeners 620 mm

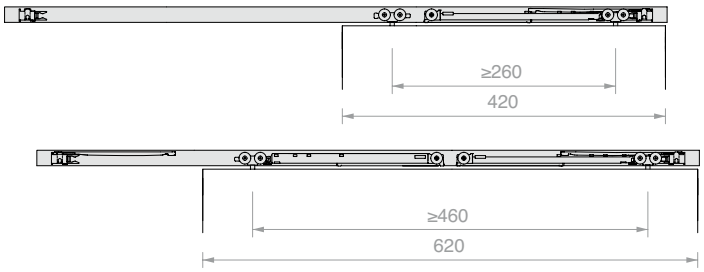

Art.	Load	Qty
057.3159.071	Up to **15** kg	1 Pc
057.3159.072	Up to **26** kg	1 Pc
057.3159.073	Up to **36** kg	1 Pc

CAP FOR TRACK 053.3326 CLIPO 36

Material: Aluminium

Finish: /6 /88 /97

Note: For installation, apply silicone to the entire surface of the cap.

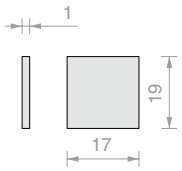

Art.	Qty
LM17019TP10	1 Pc

CAP FOR TRACK 053.3338 CLIPO 36

Material: Aluminium

Finish: /6 /88 /97

Note: For installation, apply silicone to the entire surface of the cap.

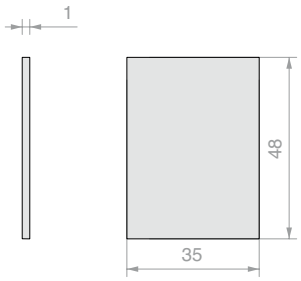

Art.	Qty
LM48035TP10	1 Pc

LOCK FOR SLIDING DOORS

Material: Aluminium

Supplied with European cylinder and 3 keys

Finish: /88 /97

Note: wall plate supplied

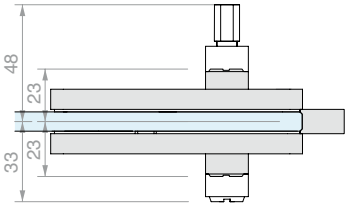

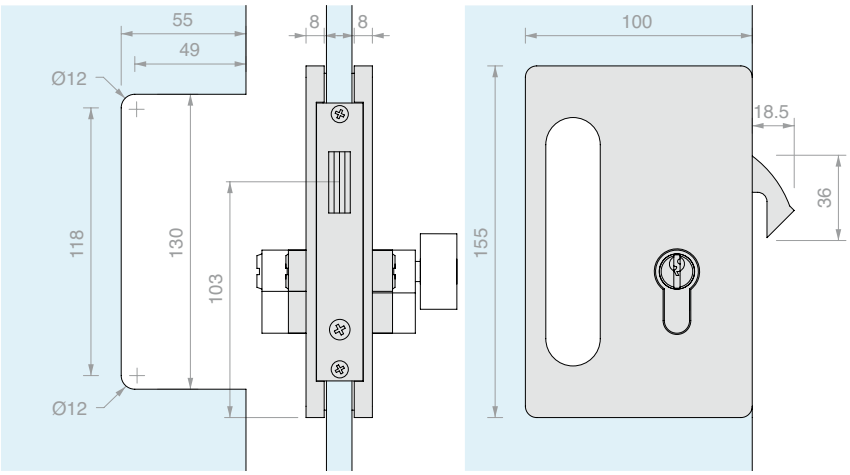

Art.	For glass	Lock	Key	Qty
SERSD610S	From **10** to **12** mm	Lock + lock	Different	1 Pc
SERSD610SU	From **10** to **12** mm	Lock + lock	Single	1 Pc
SERSD610P	From **10** to **12** mm	Door knob + lock	Single	1 Pc

STRIKE PLATE FOR GLASS

Material: Aluminium

Finish: /88 /97

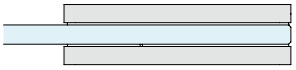

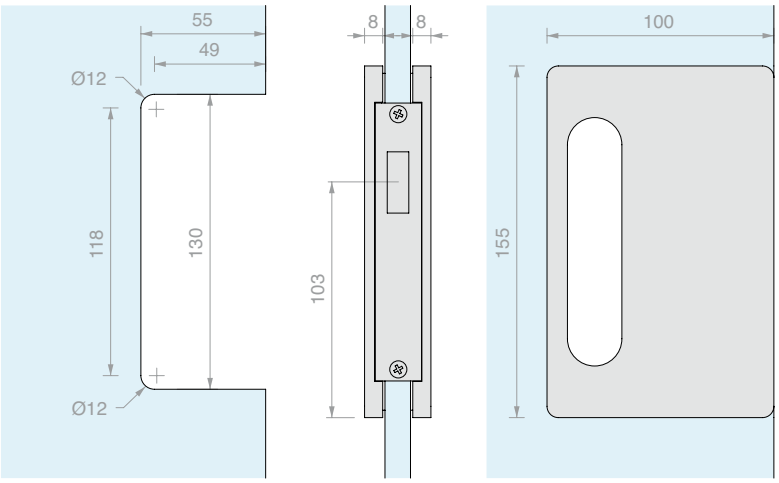

Art.	For glass	Qty
SERSD620	From **10** to **12** mm	1 Pc

LOCK FOR SLIDING DOORS

Material: Aluminium

Right-hand side (for left-hand side fit upside-down).

With 2 keys

Finish: /88 /97

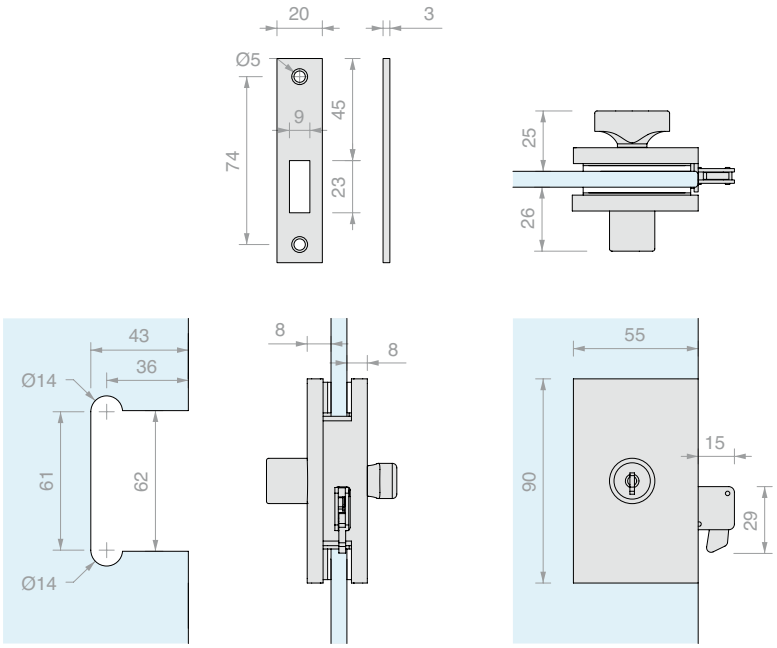

Art.	For glass	Key	Qty
DQS15	From **8** to **12** mm	Different	1 Pc

LOCK FOR SLIDING DOORS WITH HANDLE

Material: Aluminium

Right-hand side (for left-hand side fit upside-down).

With 2 keys

Finish: /88 /97

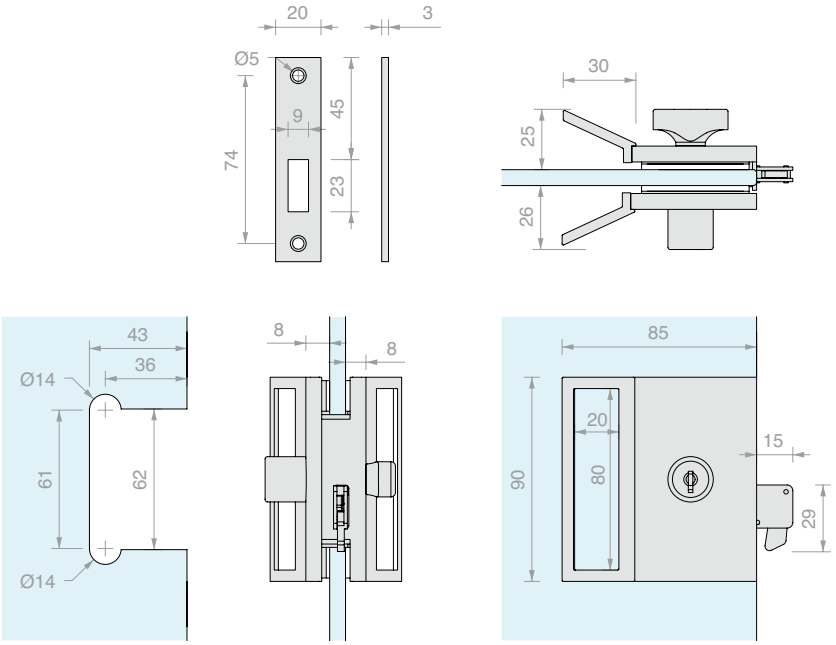

Art.	For glass	Key	Qty
DQS25	From **8** to **12** mm	Different	1 Pc

LOCK FOR SLIDING DOORS WITH DOUBLE DOOR KNOB

Material: Aluminium

Right-hand side (for left-hand side fit upside-down).

Finish: /88 /97

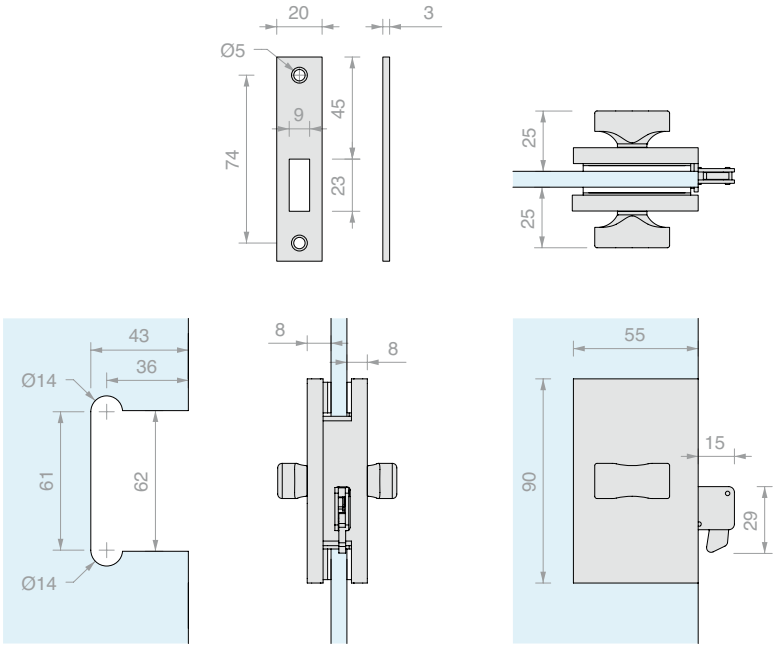

Art.	For glass	Qty
DQS13	From **8** to **12** mm	1 Pc

LOCK FOR SLIDING DOORS WITH DOUBLE DOOR KNOB AND HANDLE

Material: Aluminium

Right-hand side (for left-hand side fit upside-down).

Finish: /88 /97

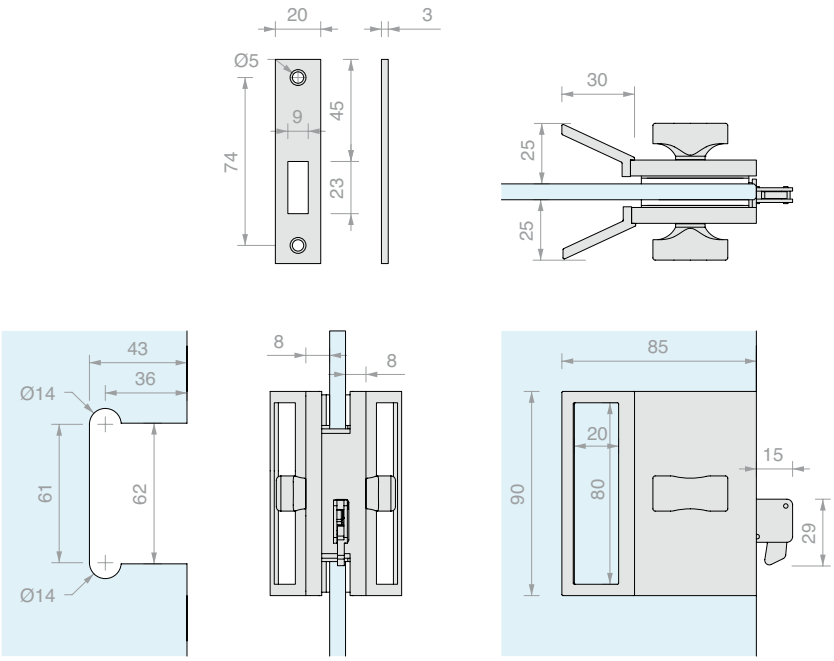

Art.	For glass	Qty
DQS23	From **8** to **12** mm	1 Pc

FREE/OCCUPIED LOCK FOR SLIDING DOORS WITH DOOR KNOB

Material: Aluminium

Right-hand side (for left-hand side fit upside-down).

Finish: /88 /97

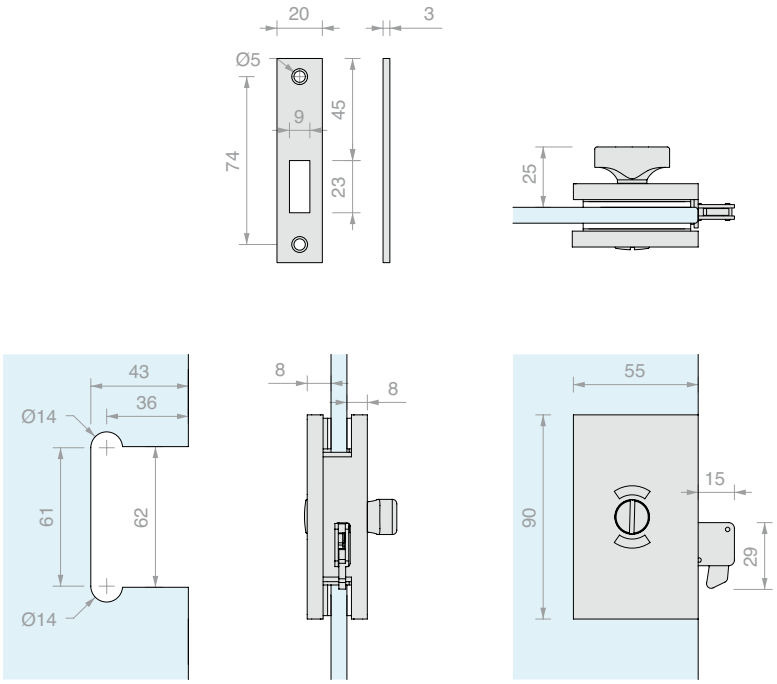

Art.	For glass	Qty
DQS11	From **8** to **12** mm	1 Pc

FREE/OCCUPIED LOCK FOR SLIDING DOORS WITH DOOR KNOB AND HANDLE

Material: Aluminium

Right-hand side (for left-hand side fit upside-down).

Finish: /88 /97

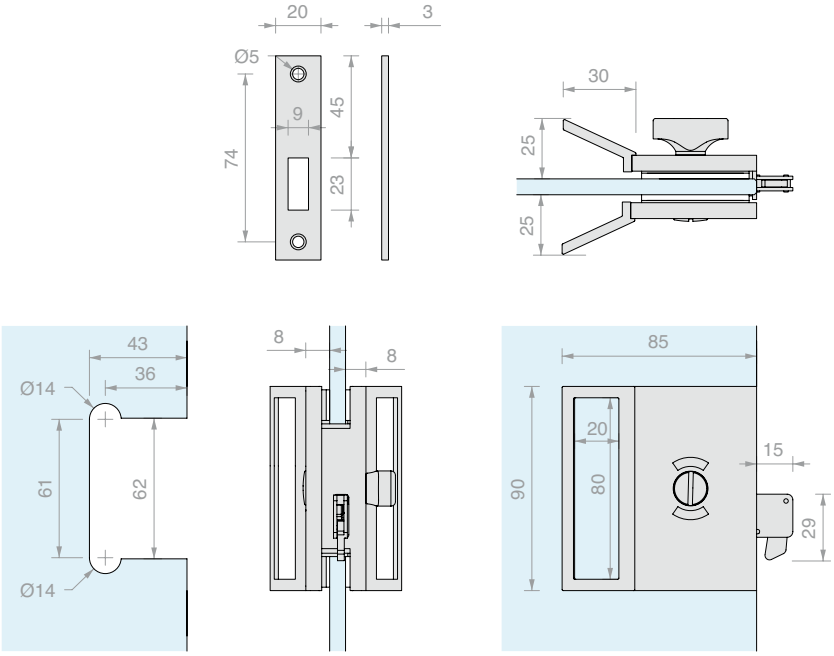

Art.	For glass	Qty
DQS21	From **8** to **12** mm	1 Pc

GLASS COUNTERLOCK

Material: Aluminium

Right-hand side (for left-hand side fit upside-down).

Finish: /88 /97

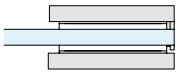

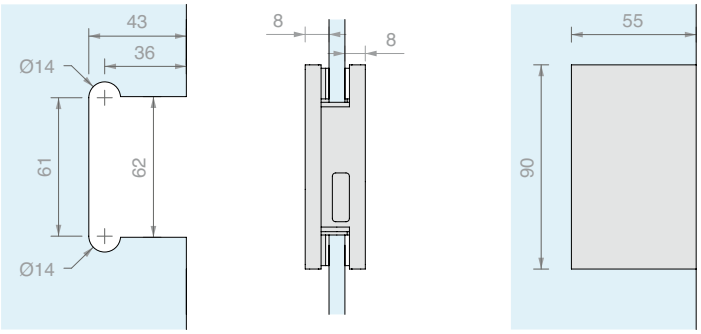

Art.	For glass	Qty
DQS37	From **8** to **12** mm	1 Pc

LOCK FOR SLIDING DOORS

Material: Brass

Supplied with European cylinder and 3 keys

Finish: /3 /45

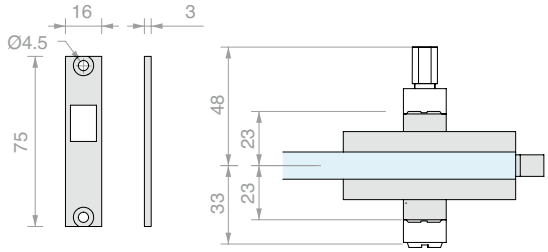

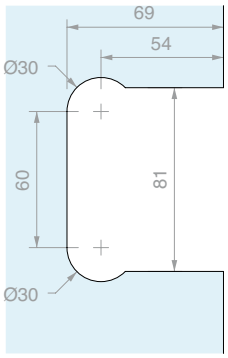

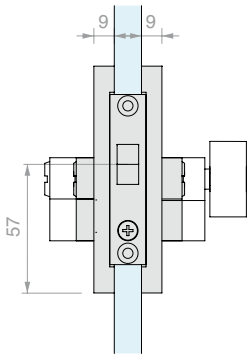

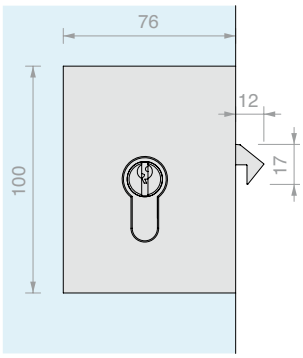

Art.	For glass	Lock	Key	Qty
SERMG10S	From **8** to **12** mm	Lock + lock	Different	1 Pc
SERMG10SU	From **8** to **12** mm	Lock + lock	Single	1 Pc
SERMG10P	From **8** to **12** mm	Door knob + lock	Single	1 Pc

STRIKE PLATE FOR GLASS

Material: Brass

Finish: /3 /45

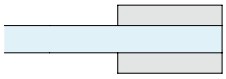

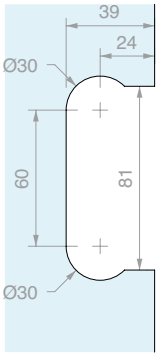

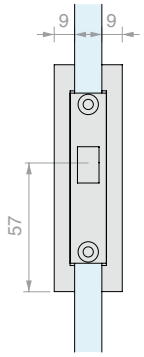

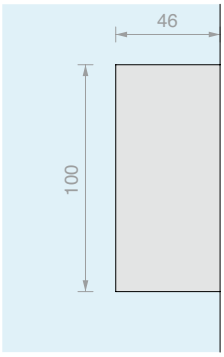

Art.	For glass	Qty
SERMGC1	From **8** to **12** mm	1 Pc

LOCK FOR SLIDING DOORS WITH HANDLE

Material: Brass

Supplied with European cylinder and 3 keys

Finish: /3 /45

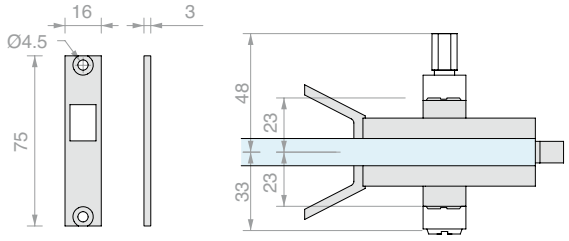

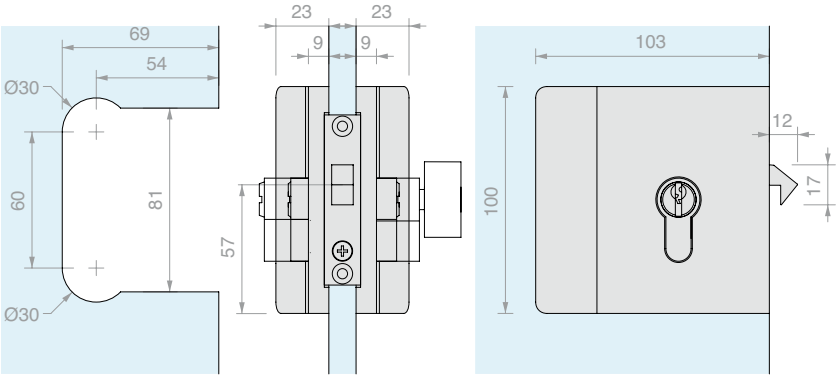

Art.	For glass	Lock	Key	Qty
SERMGM10S	From **8** to **12** mm	Lock + lock	Different	1 Pc
SERMGM10SU	From **8** to **12** mm	Lock + lock	Single	1 Pc
SERMGM10P	From **8** to **12** mm	Door knob + lock	Single	1 Pc

WALL STRIKE PLATE

Material: Brass

Finish: /3 /45

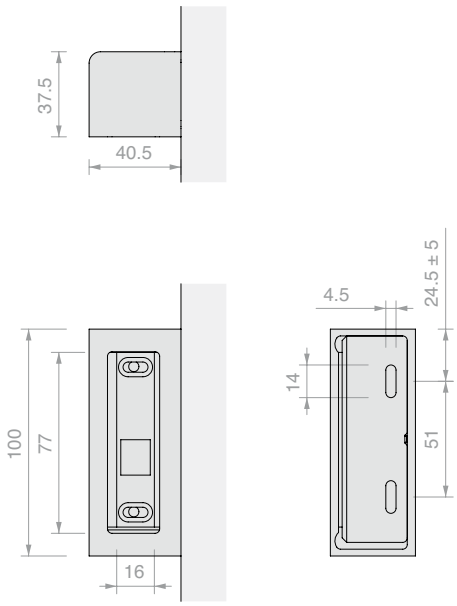

Art.	Q.ty
SERMG19	1 Pc

GLASS STRIKE PLATE

Material: Brass

Finish: /3 /45

*add the desired overlap between the panes to this measurement

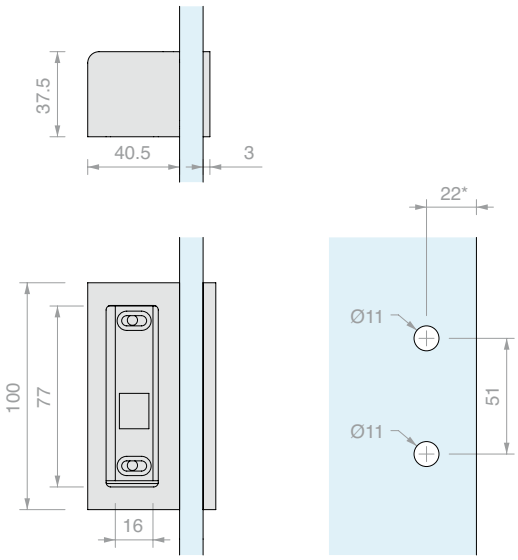

Art.	For glass	Qty
SERMG12	From **8** to **12** mm	1 Pc

LOCK FOR SLIDING DOORS

Material: Brass

Right-hand side (for left-hand side fit upside-down).

With 2 keys

Finish: /1 /24 /45

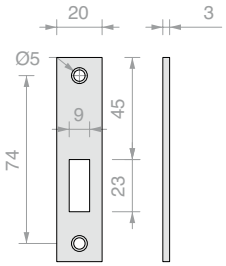

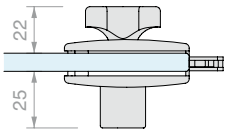

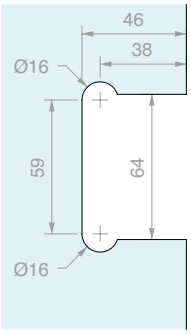

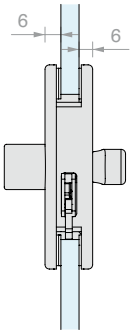

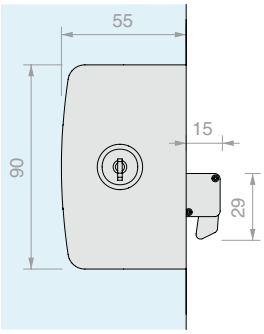

Art.	For glass	Key	Qty
CHN28	From **8** to **10** mm	Different	1 Pc

LOCK FOR SLIDING DOORS WITH HANDLE

Material: Brass

Right-hand side (for left-hand side fit upside-down).

With 2 keys

Finish: /1 /24 /45

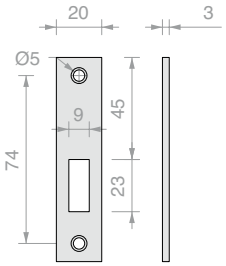

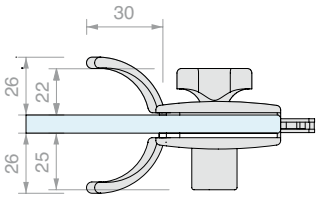

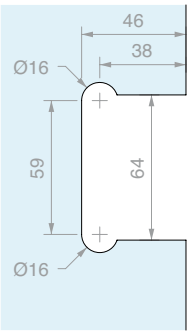

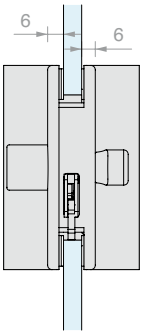

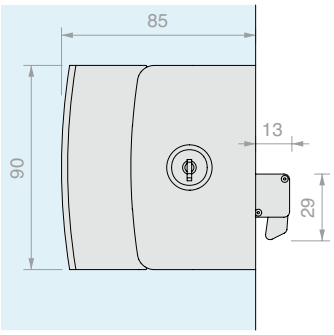

Art.	For glass	Key	Qty
CHN31	From **8** to **10** mm	Different	1 Pc

LOCK FOR SLIDING DOORS WITH DOUBLE DOOR KNOB

Material: Brass

Right-hand side (for left-hand side fit upside-down).

Finish: /1 /24 /45

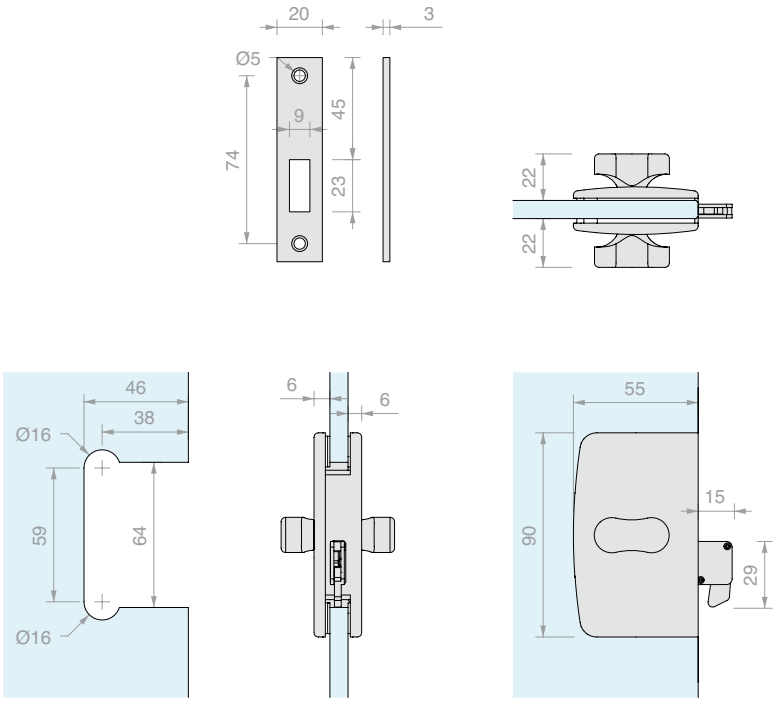

Art.	For glass	Qty
CLH12	From **8** to **10** mm	1 Pc

LOCK FOR SLIDING DOORS WITH DOUBLE DOOR KNOB AND HANDLE

Material: Brass

Right-hand side (for left-hand side fit upside-down).

Finish: /1 /24 /45

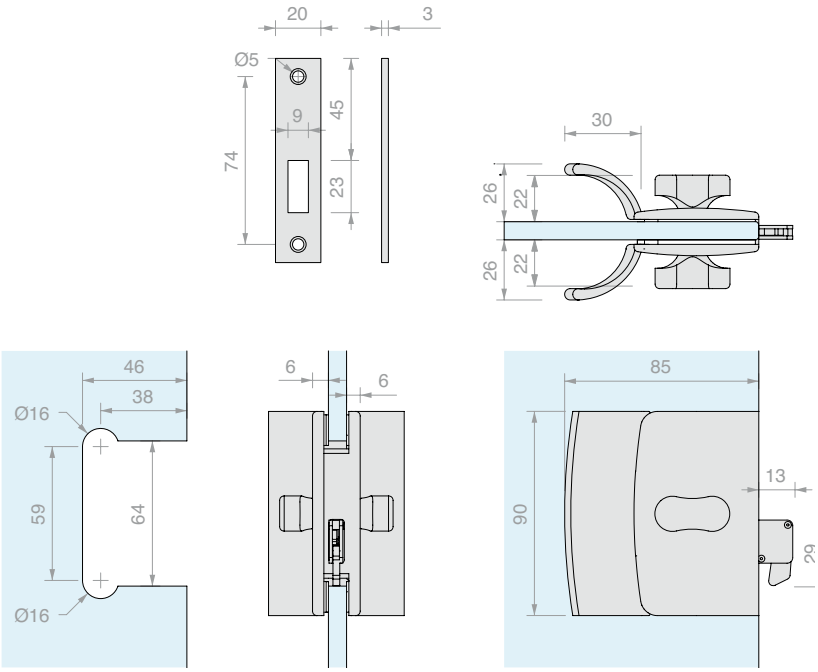

Art.	For glass	Qty
CLHM14	From **8** to **10** mm	1 Pc

FREE/OCCUPIED LOCK FOR SLIDING DOORS WITH DOOR KNOB

Material: Brass

Right-hand side (for left-hand side fit upside-down).

Finish: /1 /24 /45

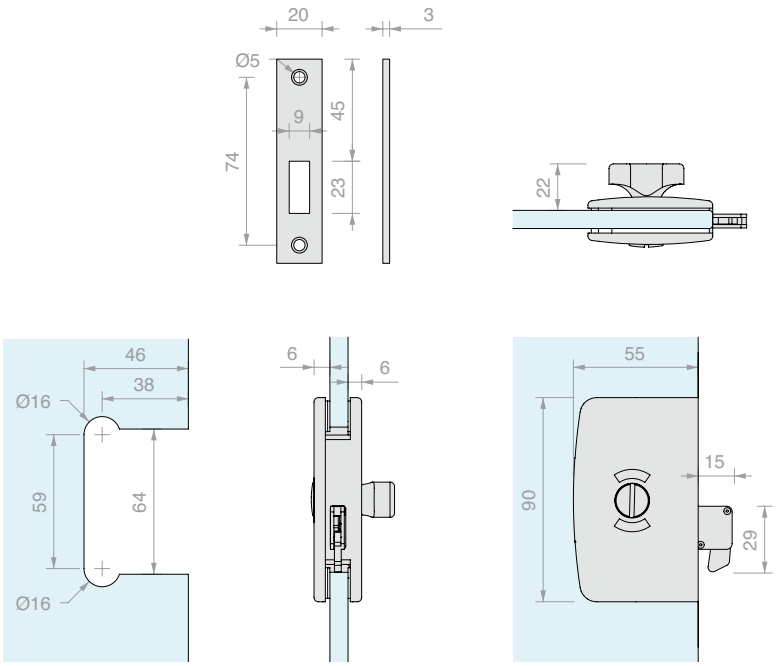

Art.	For glass	Qty
CLS10	From **8** to **10** mm	1 Pc

FREE/OCCUPIED LOCK FOR SLIDING DOORS WITH DOOR KNOB AND HANDLE

Material: Brass

Right-hand side (for left-hand side fit upside-down).

Finish: /1 /24 /45

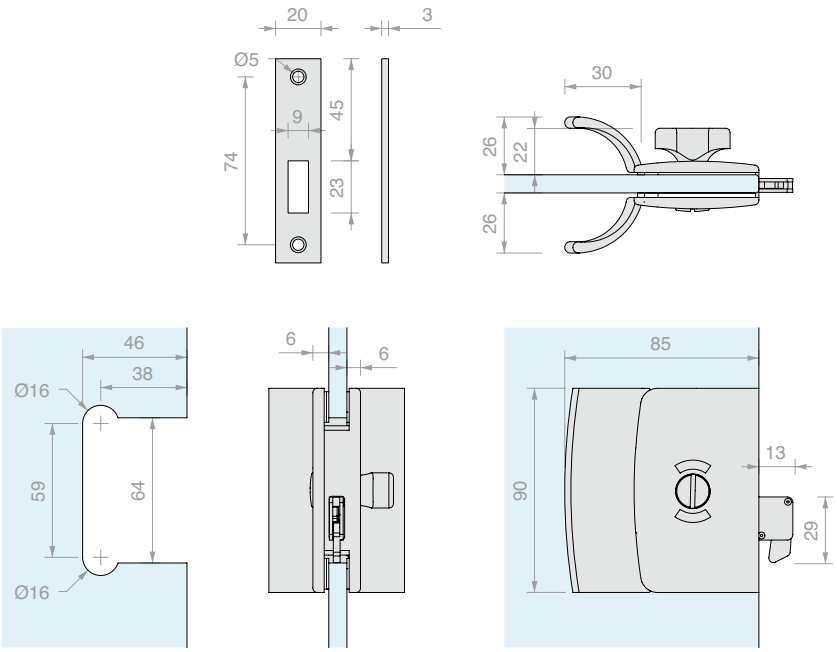

Art.	For glass	Qty
CLM11	From **8** to **10** mm	1 Pc

LOCK FOR SLIDING DOOR SINGLE DOOR KNOB

Material: Brass

Right-hand side (for left-hand side fit upside-down).

Finish: /1 /24 /45

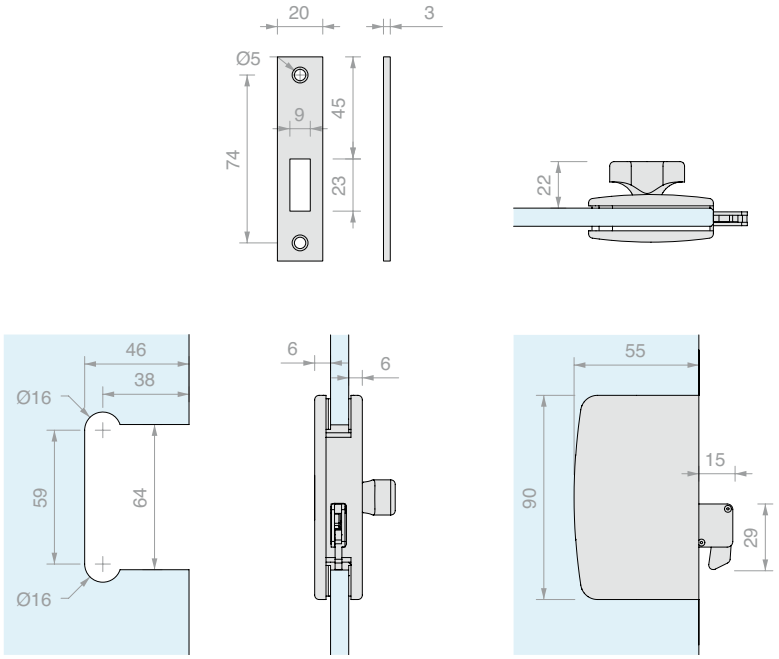

Art.	For glass	Qty
CLPN	From **8** to **10** mm	1 Pc

GLASS COUNTERLOCK

Material: Brass

Right-hand side (for left-hand side fit upside-down).

Finish: /1 /24 /45

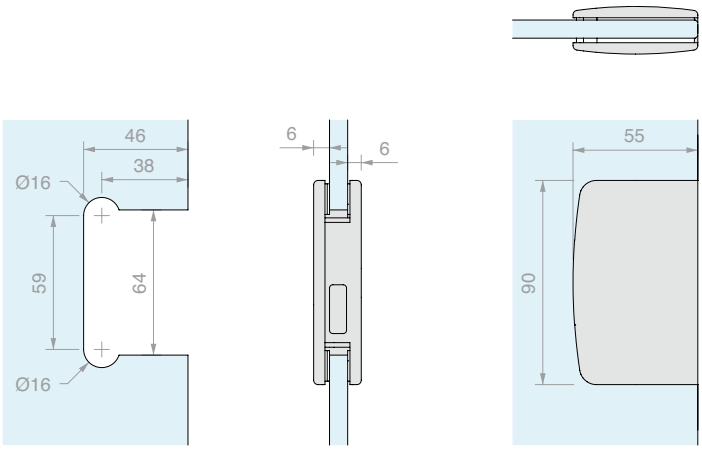

Art.	For glass	Qty
CL95	From **8** to **10** mm	1 Pc

ADHESIVE GASKET FOR GLASS EDGE

Material: TPE

10 m roll

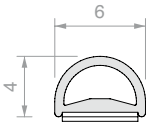

Art.	Colour	Qty
057.3080.001	Transparent	1 Pc
057.3080.002	Black	1 Pc

GLASS BUMPER ADHESIVE GASKET FOR GLASS EDGE

Material: TPE

12 m roll supplied with transparent VHB high adhesion two-sided tape for -40°C to +150°C

Colour: embossed

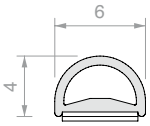

Art.	For glass	Qty
GSB12	From **8** to **13.5** mm	1 Pc

DEGREASING WIPE

Disposable isopropyl alcohol wipe

Art.	Q.ty
GSLSVL	1 Pc

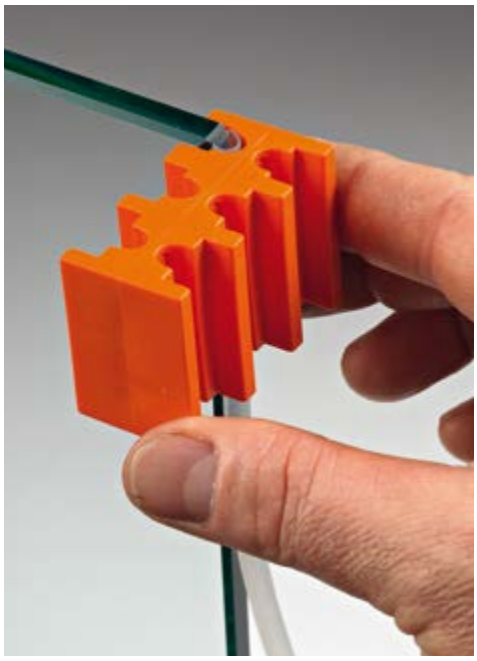
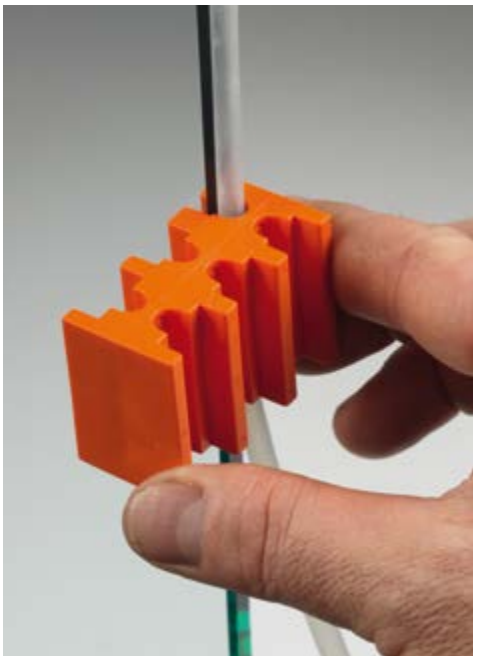

GSB12 MOUNTING TEMPLATE

Plastic mounting template for positioning the glass at the centre of the edge along the whole length.
Material: Plastic

Art.	Q.ty
GSB831	1 Pc

ADHESIVE GLASS LIP SLIDE GASKET WITH LEAK PROTECTION LIP THAT CAN BE SHORTENED

Material: TPE
Supplied with transparent VHB high adhesion two-sided tape for -40°C to +150°C
Colour: embossed

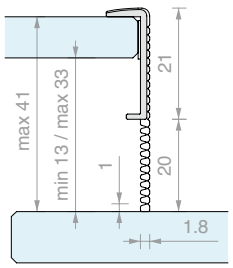

Art.	L	For glass	Qty
GSLS217	**3000** mm	From **8** to **13.5** mm	1 Pc

STEEL SYSTEMS FOR SLIDING DOORS

GLASS DOOR PANELS
6-12.7 mm

GIUMAX 2000
Page 329

GIUMAX 3000
Page 341

GIUMAX 3200
Page 349

GLASS DOOR PANELS
12-17.5 mm

GIUMAX 8500
Page 359

GIUMAX 6500
Page 369

GLASS DOOR WITH
WOODEN FRAME
≥ 30 mm

GIUMAX 3500
Page 379

GIUMAX

The sliding door systems in the GIUMAX series feature visible slide wheels on the load-bearing track. Made from AISI 304 stainless steel, the systems stand out for their smart appearance, reliability and remarkable durability.

The range features 6 models that match all design and installation requirements.
Choose the best solution for your project:

GIUMAX 2000

GIUMAX 3000

GIUMAX 3200

	GIUMAX 2000	GIUMAX 3000	GIUMAX 3200
Panel Thickness (mm)	Glass 10-12	Glass 8-10.7	Glass 6-12.7
Roller		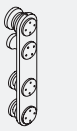	
Track	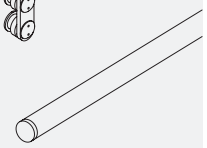	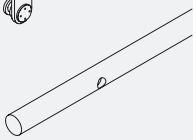	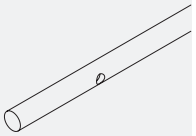
Installation	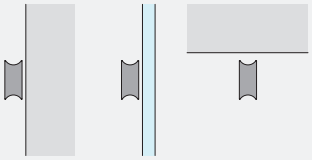 Wall Glass Ceiling	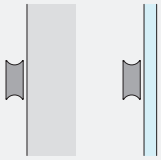 Wall Glass	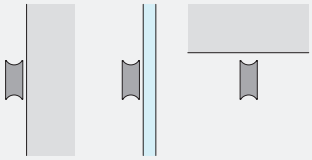 Wall Glass Ceiling
Max. load (kg)	100	80	80

FINISH
GIUMAX system
/8

Main components made of brushed steel
Other finishes available on request

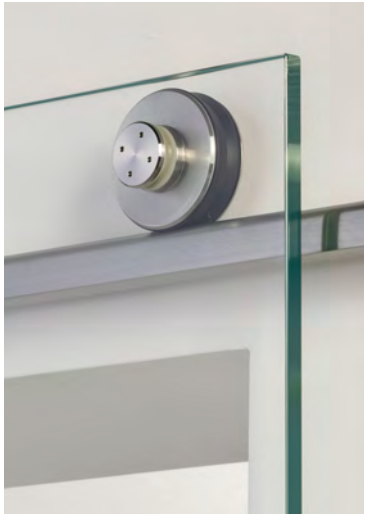

GIUMAX 8500

GIUMAX 6500

GIUMAX 3500

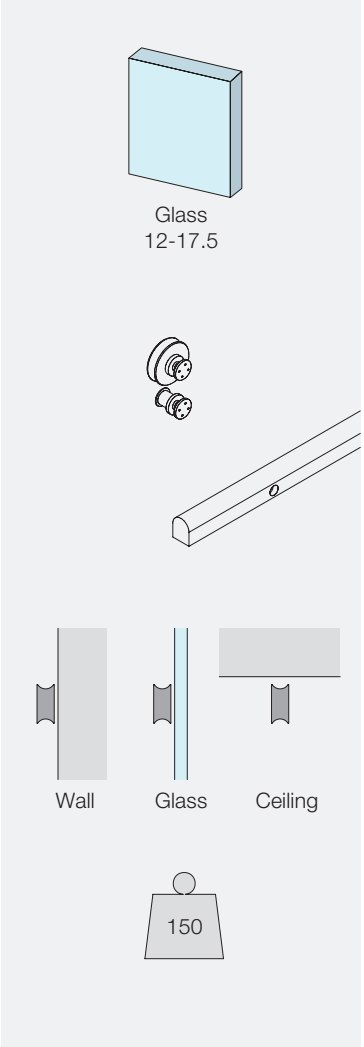

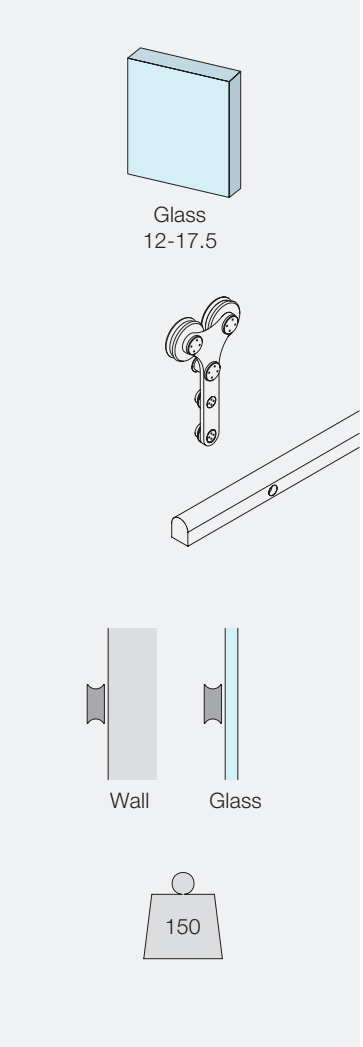

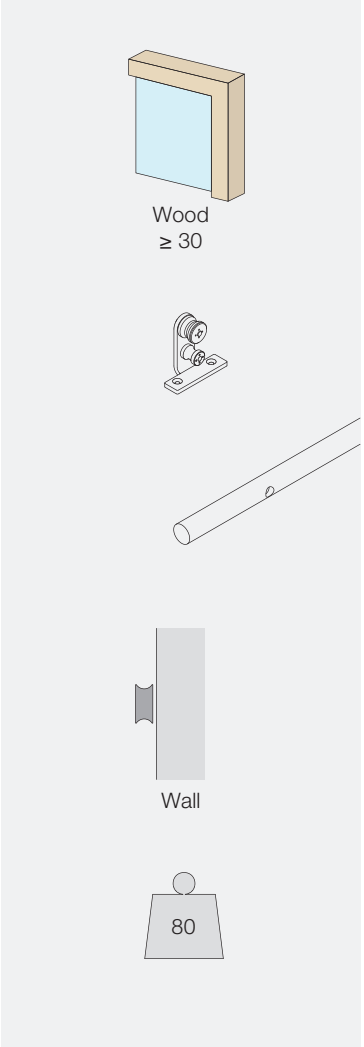

GIUMAX 2000

AISI 304 stainless steel sliding door system composed of a round load-bearing track, visible rollers and fixing accessories.

The roller is composed of a connecting bracket, an upper sliding wheel and two studs for fixing the door panel. The couple of rollers allows a sliding of a door panel with a thickness of 10 to 12 mm and a considerable weight, up to 100 kg.

The roller technology allows the height of the studs to be adjusted to ease the position of the door panel.

The fixing parts allow a customised fitment of the track according to the type of installation: on the wall, glass partition or ceiling.

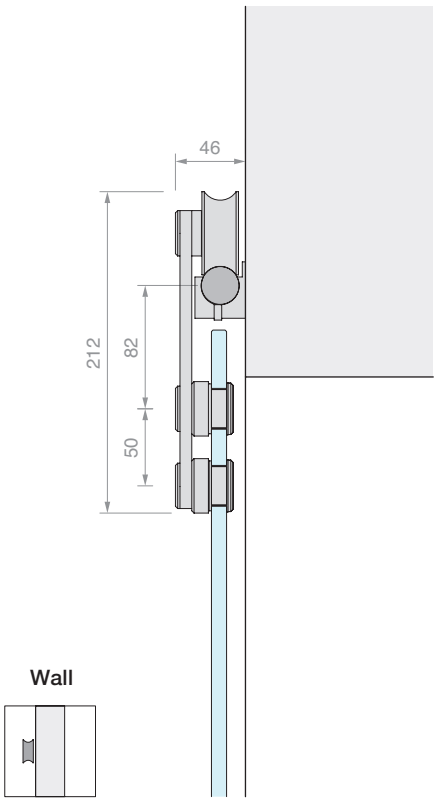

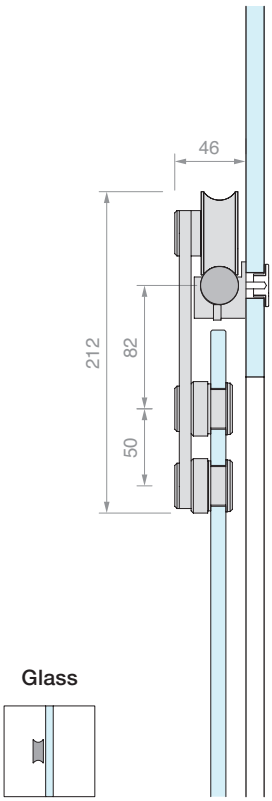

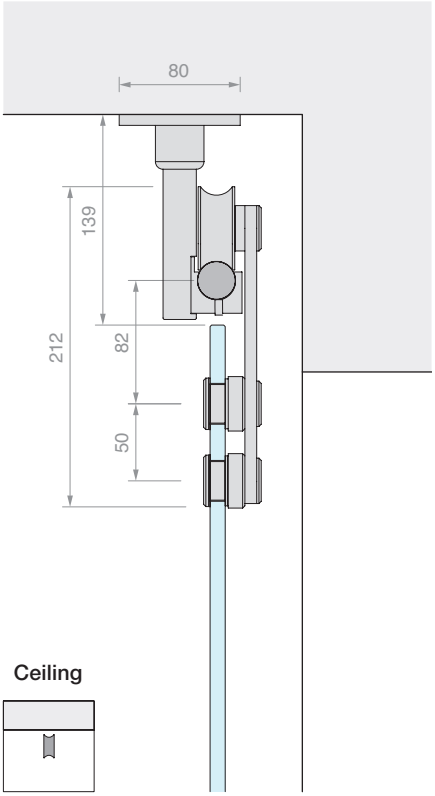

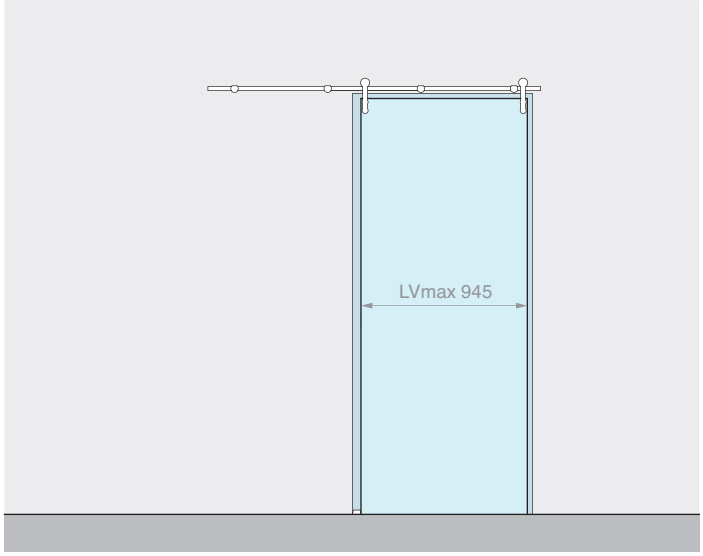

Kit comprising: Finish: /8

Art.	Description	Qty
GLM2500	Kit of 2 rollers	1 Pc
GLMCAV2	Tubular track L = 2000 mm	1 Pc
GLM33M5	Wall fixing	4 Pcs
GLMBLCDX	Right end stop	1 Pc
GLMBLCSX	Left end stop	1 Pc
057.3030.071	Adjustable floor guide	1 Pc
Optional		
UT300	Pin wrench	1 Pc

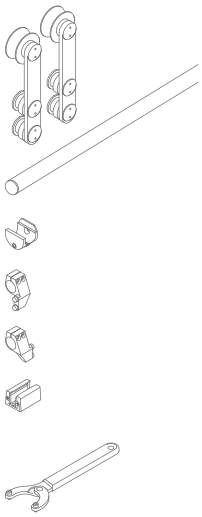

Art.	Description	For glass	Max. load	Qty
GLM20002MUR	Wall fixing sliding door kit	From **10** to **12** mm	**100** kg	1 Pc

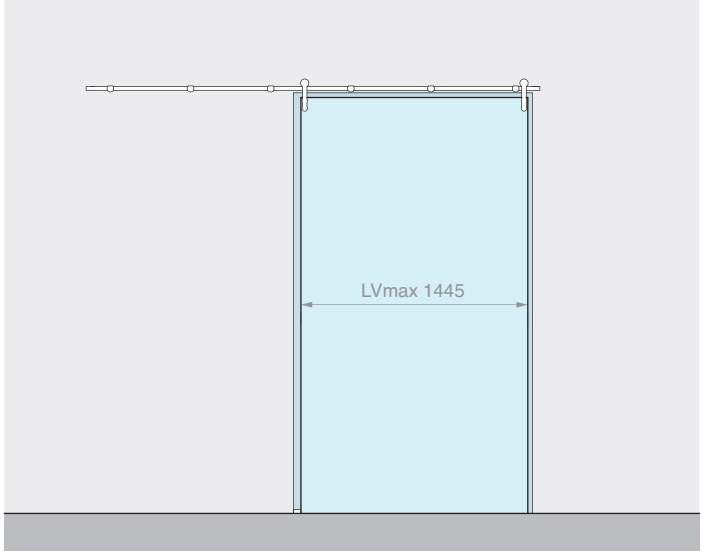

Kit comprising: Finish: /8

Art.	Description	Qty
GLM2500	Kit of 2 rollers	1 Pc
GLMCAV3	Tubular track L = 3000 mm	1 Pc
GLM33M5	Wall fixing	6 Pcs
GLMBLCDX	Right end stop	1 Pc
GLMBLCSX	Left end stop	1 Pc
057.3030.071	Adjustable floor guide	1 Pc
Optional		
UT300	Pin wrench	1 Pc

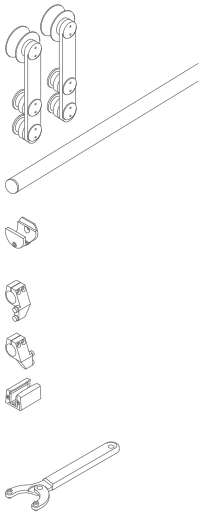

Art.	Description	For glass	Max. load	Qty
GLM20003MUR	Wall fixing sliding door kit	From **10** to **12** mm	**100** kg	1 Pc

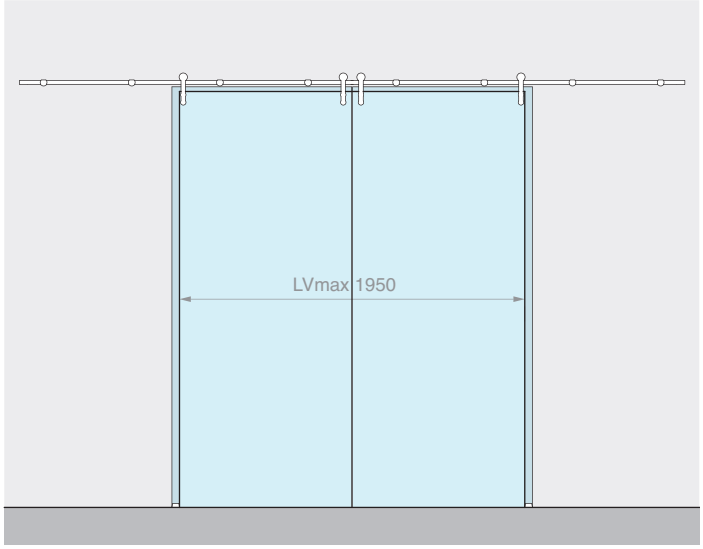

Kit comprising: Finish: /8

Art.	Description	Qty
GLM2500	Kit of 2 rollers	2 Pcs
GLMCAV4	Tubular track L = 4000 mm	1 Pc
GLM33M5	Wall fixing	8 Pcs
GLMBLCDX	Right end stop	2 Pcs
GLMBLCSX	Left end stop	2 Pcs
057.3030.071	Adjustable floor guide	2 Pcs
Optional		
UT300	Pin wrench	1 Pc

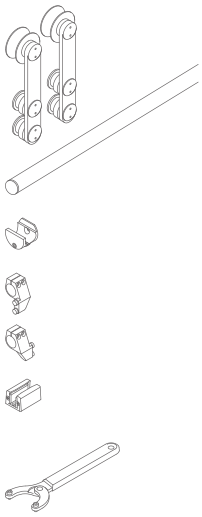

Art.	Description	For glass	Max. load	Qty
GLM20004MUR	Wall fixing sliding door kit for 2 door panels	From **10** to **12** mm	**100** + **100** kg	1 Pc

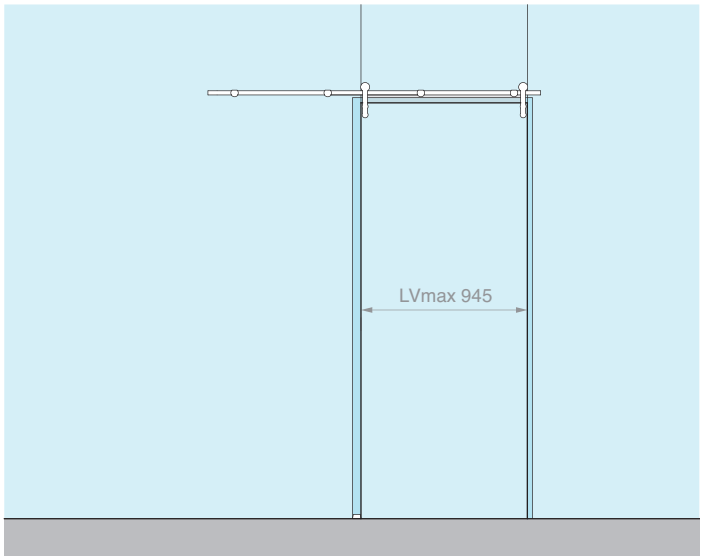

Kit comprising: Finish: /8

Art.	Description	Qty
GLM2500	Kit of 2 rollers	1 Pc
GLMCAV2	Tubular track L = 2000 mm	1 Pc
GLM33VT	Glass fixing	4 Pcs
GLMBLCDX	Right end stop	1 Pc
GLMBLCSX	Left end stop	1 Pc
057.3030.071	Adjustable floor guide	1 Pc

Optional

UT300	Pin wrench	1 Pc

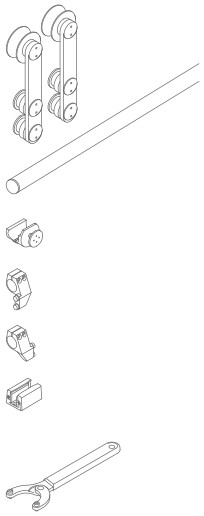

Art.	Description	For glass	Max. load	Qty
GLM20002VET	Glass fixing sliding door kit	From **10** to **12** mm	**100** kg	1 Pc

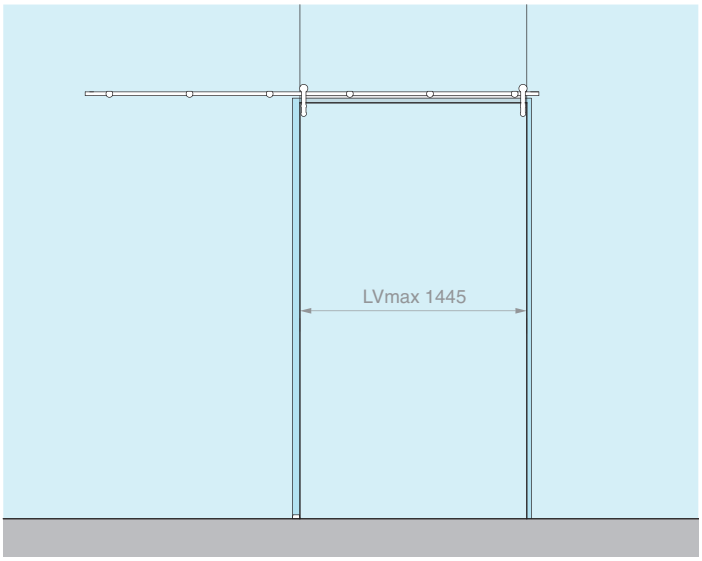

Kit comprising: Finish: /8

Art.	Description	Qty
GLM2500	Kit of 2 rollers	1 Pc
GLMCAV3	Tubular track L = 3000 mm	1 Pc
GLM33VT	Glass fixing	6 Pcs
GLMBLCDX	Right end stop	1 Pc
GLMBLCSX	Left end stop	1 Pc
057.3030.071	Adjustable floor guide	1 Pc

Optional

UT300	Pin wrench	1 Pc

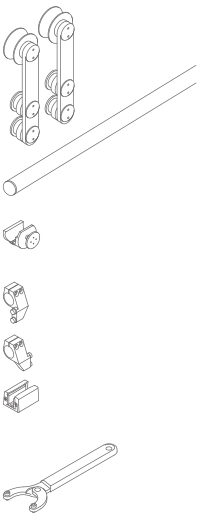

Art.	Description	For glass	Max. load	Qty
GLM20003VET	Glass fixing sliding door kit	From **10** to **12** mm	**100** kg	1 Pc

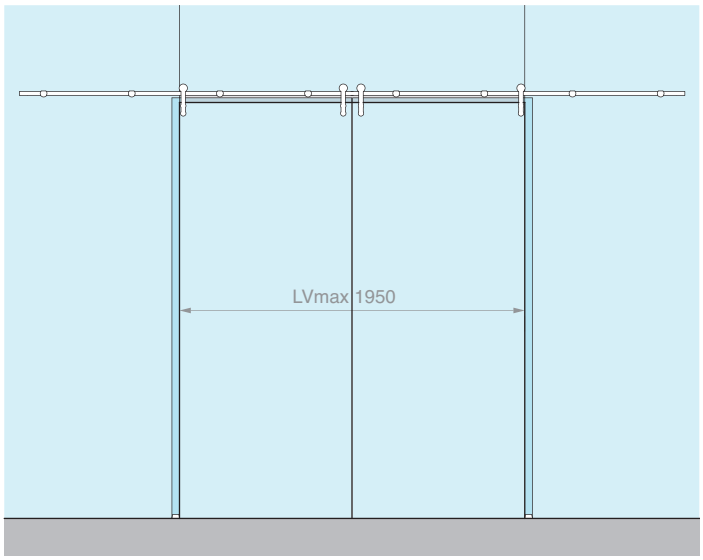

Kit comprising: Finish: /8

Art.	Description	Qty
GLM2500	Kit of 2 rollers	2 Pcs
GLMCAV4	Tubular track L = 4000 mm	1 Pc
GLM33VT	Glass fixing	8 Pcs
GLMBLCDX	Right end stop	2 Pcs
GLMBLCSX	Left end stop	2 Pcs
057.3030.071	Adjustable floor guide	2 Pcs

Optional

UT300	Pin wrench	1 Pc

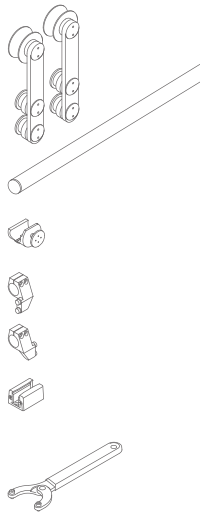

Art.	Description	For glass	Max. load	Qty
GLM20004VET	Glass fixing sliding door kit for 2 door panels	From **10** to **12** mm	**100** + **100** kg	1 Pc

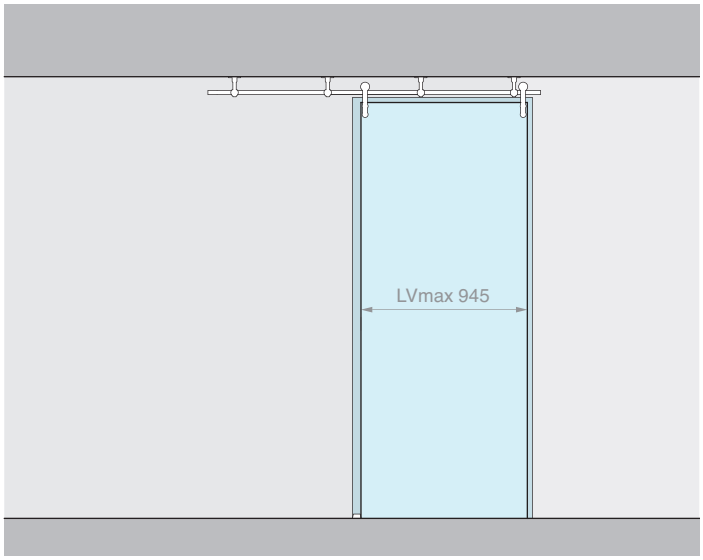

Kit comprising: Finish: /8

Art.	Description	Qty
GLM2500	Kit of 2 rollers	1 Pc
GLMCAV2	Tubular track L = 2000 mm	1 Pc
GLM2106	Ceiling fixing	4 Pcs
GLMBLCDX	Right end stop	1 Pc
GLMBLCSX	Left end stop	1 Pc
057.3030.071	Adjustable floor guide	1 Pc

Optional

UT300	Pin wrench	1 Pc

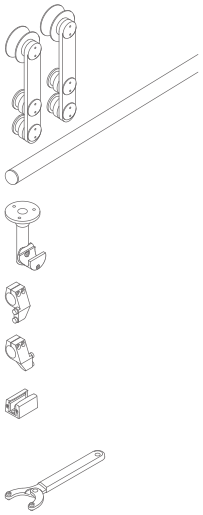

Art.	Description	For glass	Max. load	Qty
GLM20002SOF	Ceiling fixing sliding door kit	From **10** to **12** mm	**100** kg	1 Pc

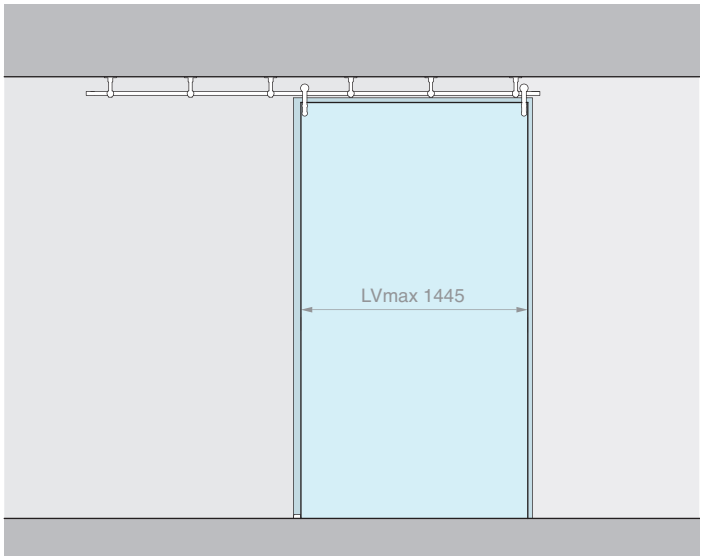

Kit comprising: Finish: /8

Art.	Description	Qty
GLM2500	Kit of 2 rollers	1 Pc
GLMCAV3	Tubular track L = 3000 mm	1 Pc
GLM2106	Ceiling fixing	6 Pcs
GLMBLCDX	Right end stop	1 Pc
GLMBLCSX	Left end stop	1 Pc
057.3030.071	Adjustable floor guide	1 Pc

Optional

UT300	Pin wrench	1 Pc

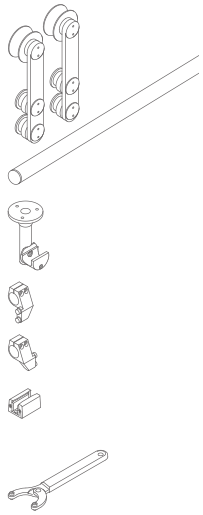

Art.	Description	For glass	Max. load	Qty
GLM20003SOF	Ceiling fixing sliding door kit	From **10** to **12** mm	**100** kg	1 Pc

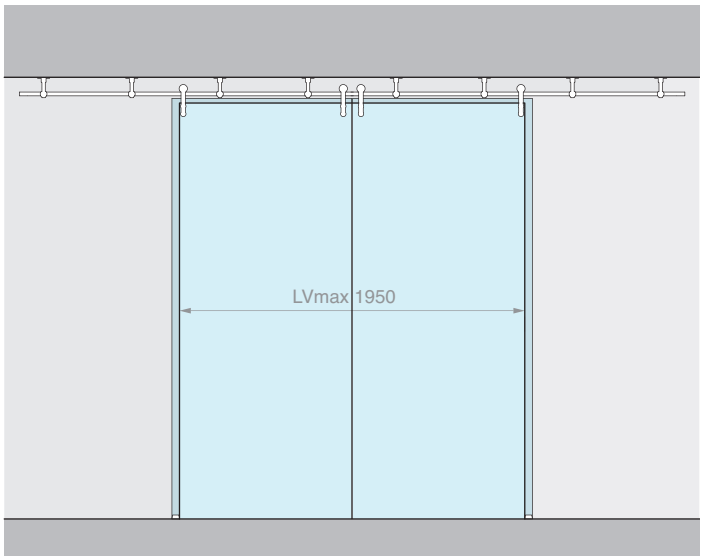

Kit comprising: Finish: /8

Art.	Description	Qty
GLM2500	Kit of 2 rollers	2 Pcs
GLMCAV4	Tubular track L = 4000 mm	1 Pc
GLM2106	Ceiling fixing	8 Pcs
GLMBLCDX	Right end stop	2 Pcs
GLMBLCSX	Left end stop	2 Pcs
057.3030.071	Adjustable floor guide	2 Pcs

Optional

UT300	Pin wrench	1 Pc

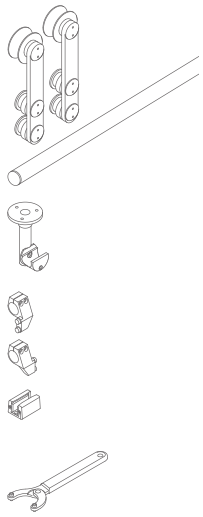

Art.	Description	For glass	Max. load	Qty
GLM20004SOF	Ceiling fixing sliding door kit for 2 door panels	From **10** to **12** mm	**100** + **100** kg	1 Pc

ROLLER

Material: AISI 304 stainless steel
Recommended holes size Ø27 mm
Recommended tool for tightening Art. UT300
Finish: /8

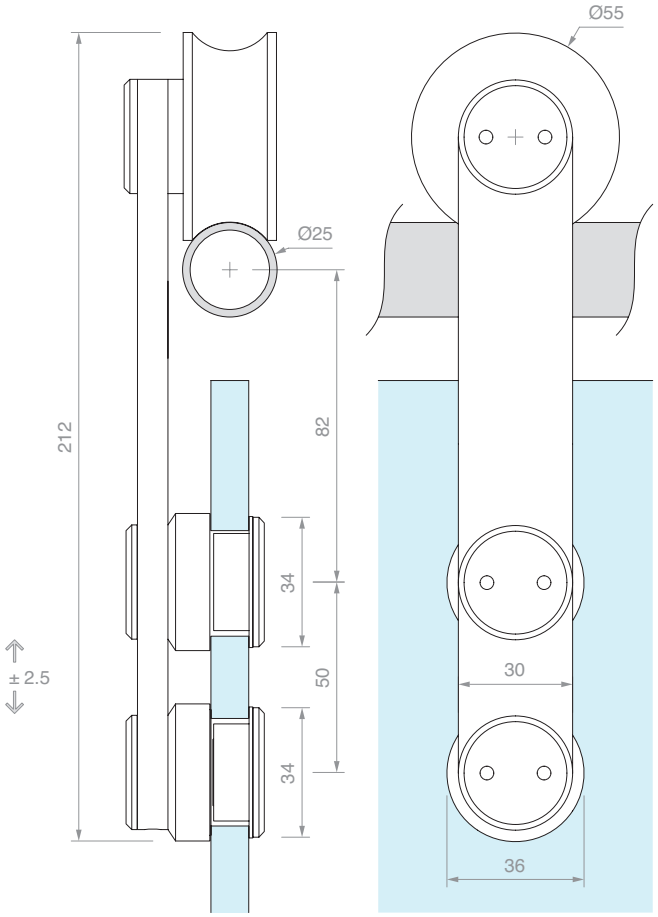

Art.	Description	For glass thickness	Qty.
GLM2550	Single roller	From **10** to **12** mm	1 Pc
GLM2500	Kit of 2 rollers	From **10** to **12** mm	1 Pc

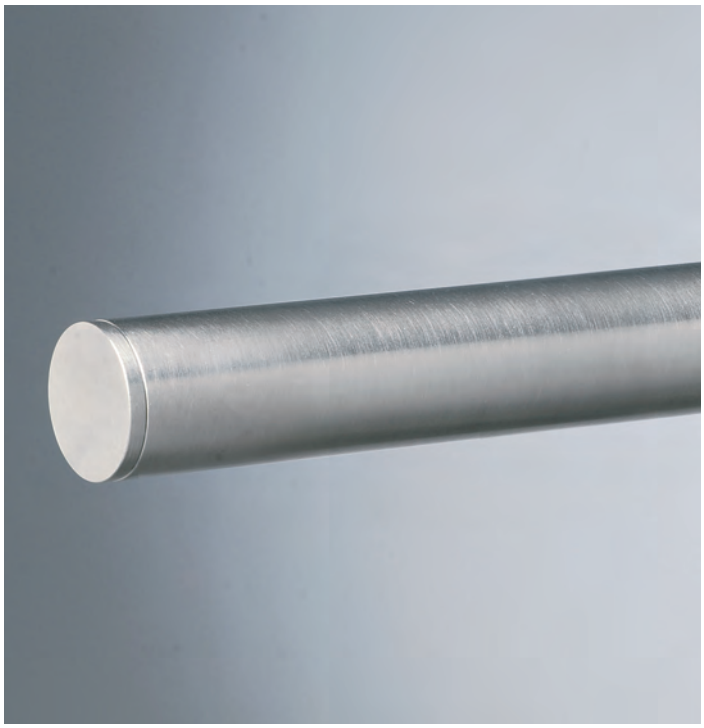

TUBULAR TRACK WITH CAPS

Material: AISI 304 stainless steel
Finish: /8

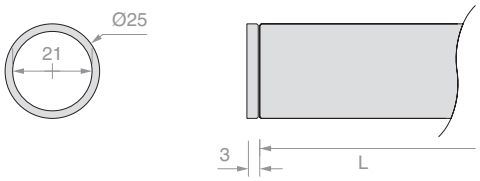

Art.	L	Qty
GLMCAV2	**2000** mm	1 Pc
GLMCAV3	**3000** mm	1 Pc
GLMCAV4	**4000** mm	1 Pc

WALL FIXING

Material: AISI 304 stainless steel

Finish: /9

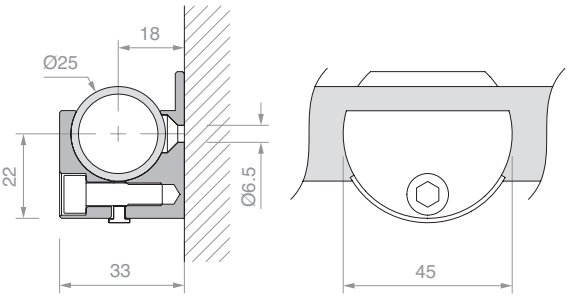

Art.	Qty
GLM33M5	1 Pc

GLASS FIXING

Material: AISI 304 stainless steel

Recommended hole size Ø17 mm

Recommended tool for tightening Art. UT200

Finish: /9

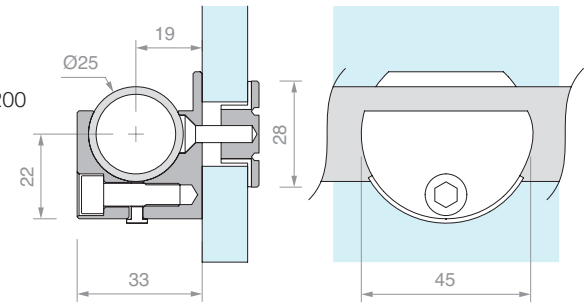

Art.	For glass	Qty
GLM33VT	From **10** to **12** mm	1 Pc

CEILING FIXING

Material: AISI 304 stainless steel

Finish: /9

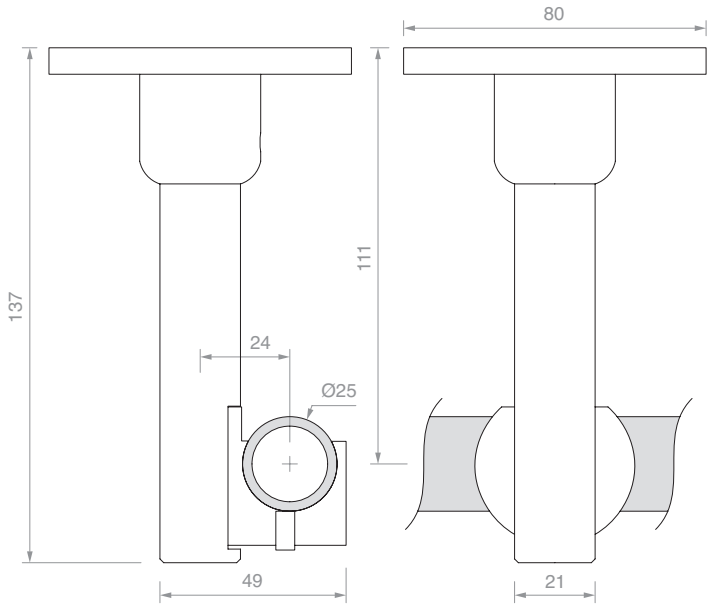

Art.	Qty
GLM2106	1 Pc

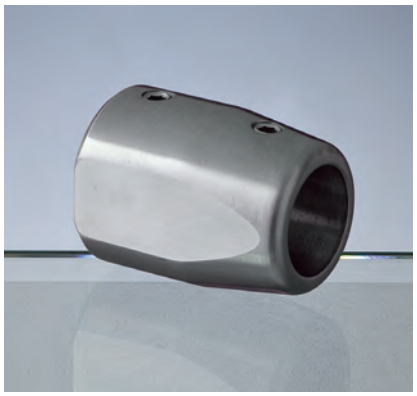

SIDE WALL FIXING

Material: AISI 304 stainless steel

Finish: /8

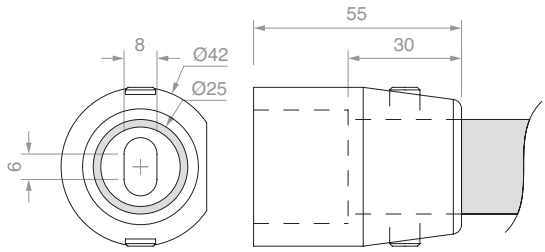

Art.	Qty
GLM8300A	1 Pc

LEFT END STOP WITH RUBBER BUMPER

Material: AISI 304 stainless steel

Finish: /8

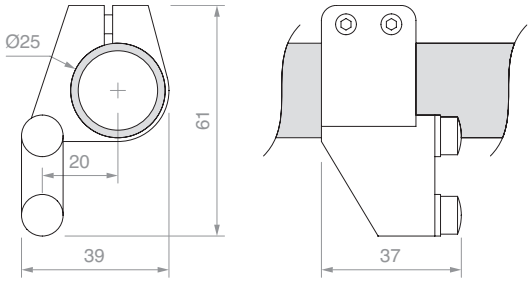

Art.	Qty
GLMBLCSX	1 Pc

RIGHT END STOP WITH RUBBER BUMPER

Material: AISI 304 stainless steel

Finish: /8

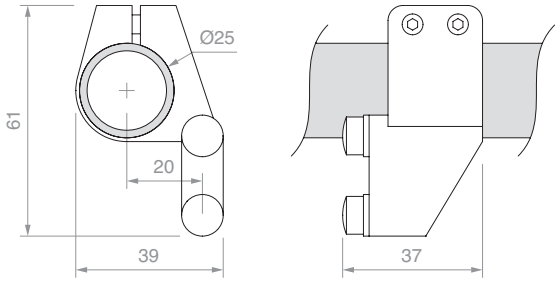

Art.	Qty
GLMBLCDX	1 Pc

SOFT-CLOSING END STOP

Material: AISI 304 stainless steel

Finish: /8

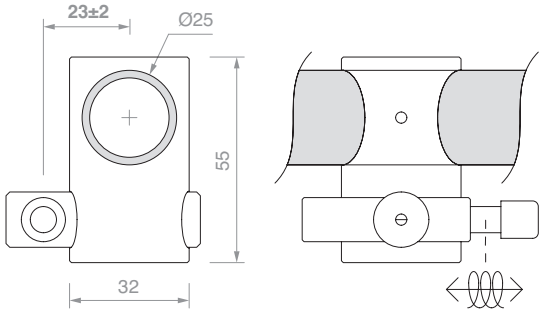

Art.	Qty
GLMMOLL	1 Pc

UNIVERSAL END STOP

Material: AISI 304 stainless steel

Finish: /8

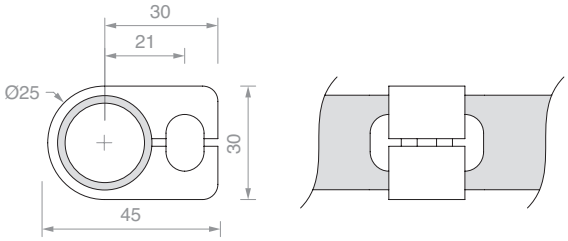

Art.	Qty
GLMBLC01	1 Pc

ADJUSTABLE FLOOR GUIDE

Material: aluminium

Finish: /88 /91 /97 /R2

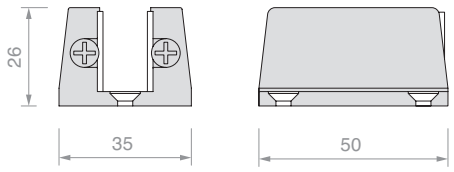

Art.	For glass	Qty
057.3030.071	From **6** to **12.7** mm	1 Pc

LEFT FLOOR DOOR STOP

Material: AISI 304 stainless steel

Finish: /8

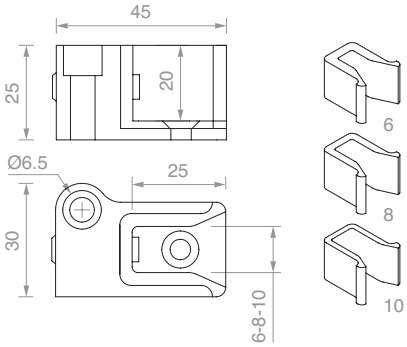

Art.	For glass	Qty
STPSX	From **6** to **10** mm	1 Pc

RIGHT FLOOR DOOR STOP

Material: AISI 304 stainless steel

Finish: /8

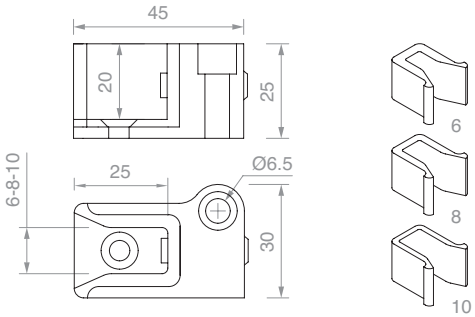

Art.	For glass	Qty
STPDX	From **6** to **10** mm	1 Pc

PIN WRENCH

Material: iron body, steel pins

The compass opening allows to operate with wide radiuses,
for pair of holes with a centre distance between 9 mm and 55 mm

Art.	Description	Qty
UT300	Pin wrench with Ø2.9 mm pins	1 Pc
UTC300R	2 spare pins Ø2.9 mm	1 Pc

TRACK FIXING

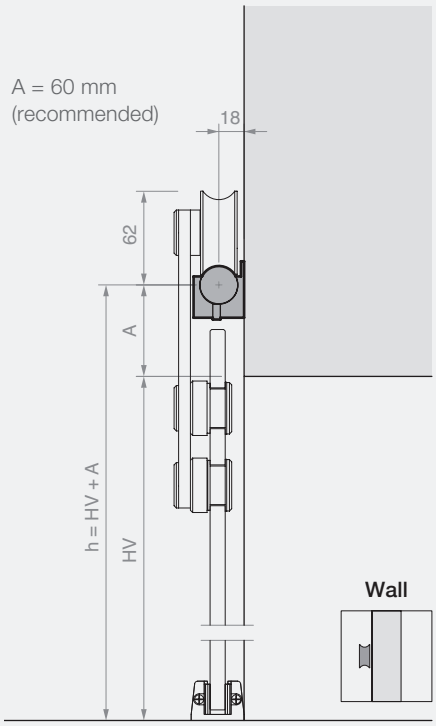

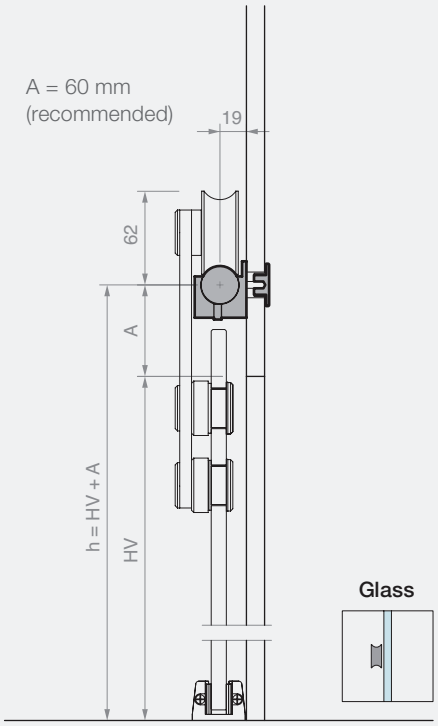

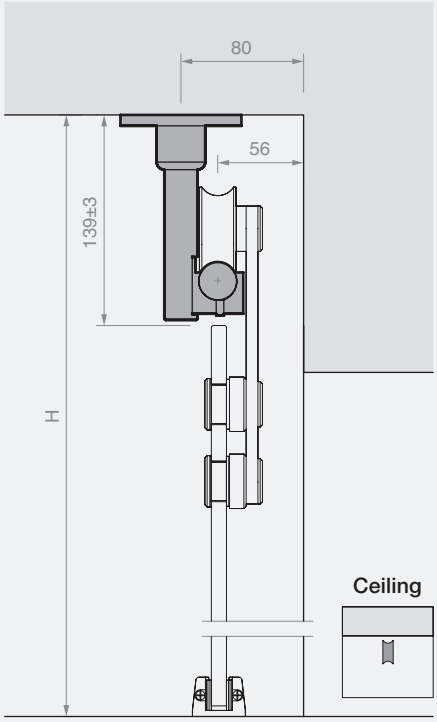

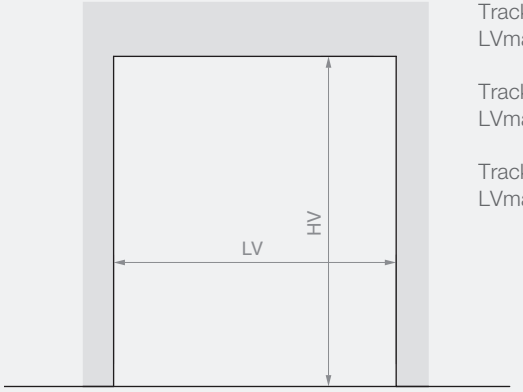

Track L = 2000 mm
LVmax 945 mm

Track L = 3000 mm
LVmax 1445 mm

Track L = 4000 mm
LVmax 1950 mm

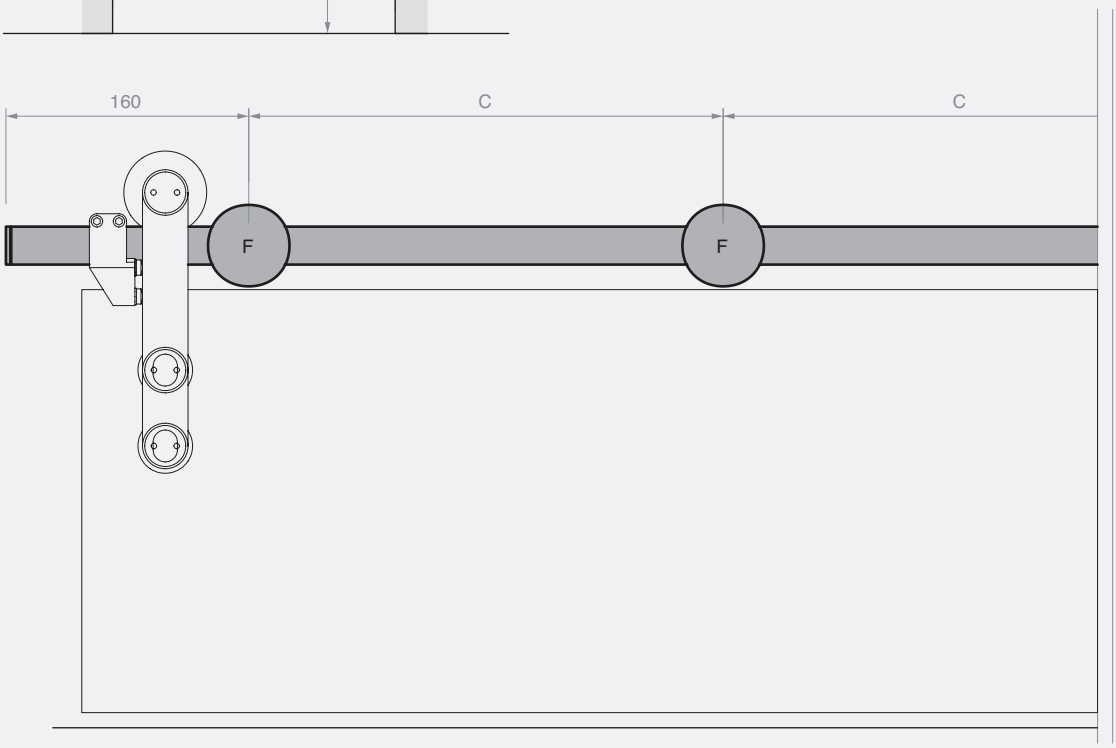

Track L = 2000 mm
4 (recommended) fixings (F)
C (recommended) = 560 mm

Track L = 3000 mm
6 (recommended) fixings (F)
C (recommended) = 540 mm

Track L = 4000 mm
8 (recommended) fixings (F)
C (recommended) = 530 mm

CALCULATION OF DIMENSIONS AND DRILLING OF GLASS PANELS

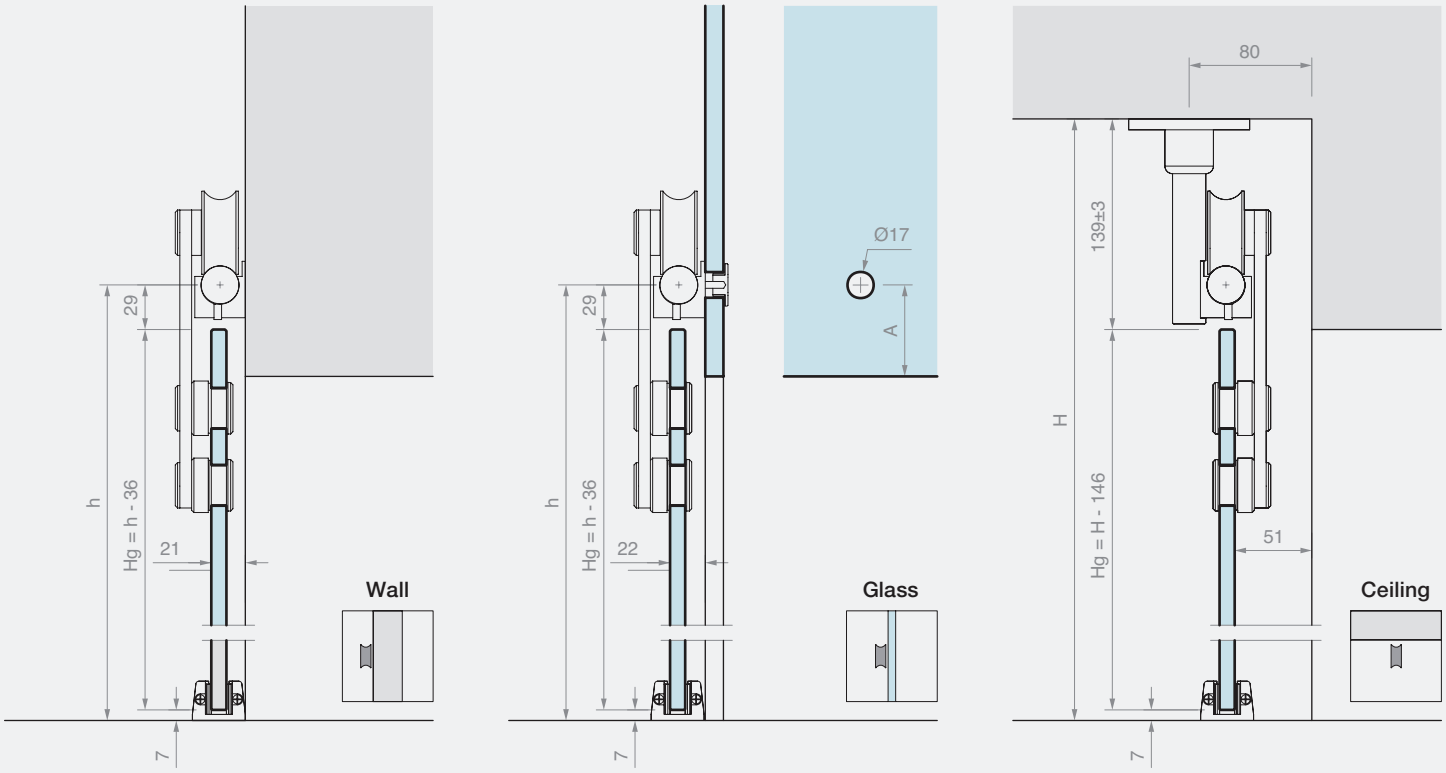

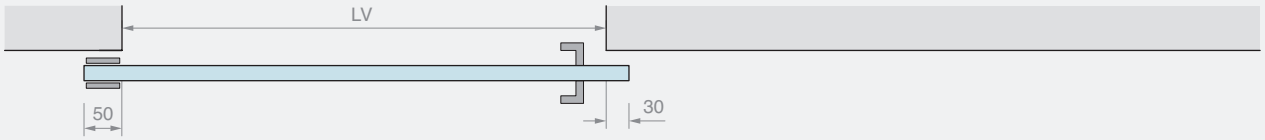

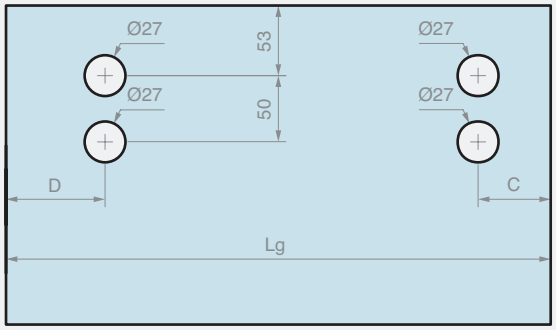

Lg = LV + 80
C ≥ 55 mm
D ≥ 75 mm

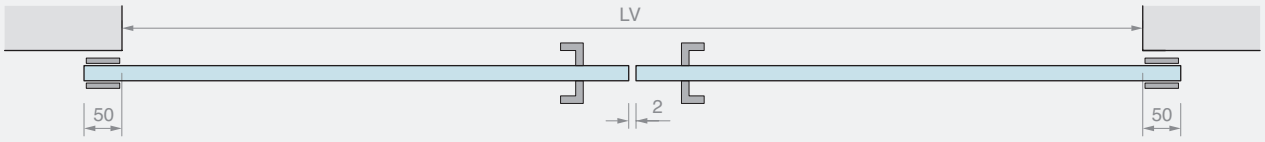

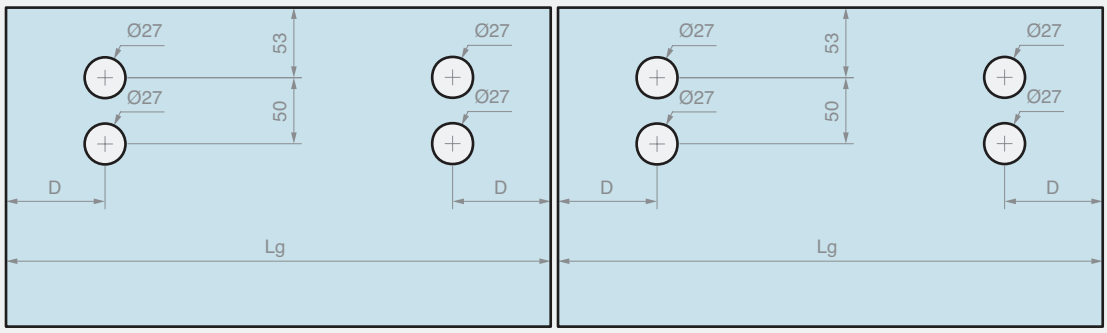

Lg = (LV + 98)/2
D ≥ 75 mm

GIUMAX 3000

AISI 304 stainless steel sliding door system composed of a solid round load-bearing track, visible rollers and fixing accessories.

The roller is composed of a connecting bracket, an upper sliding wheel, an anti-derailment pin and two studs for fixing the door panel. The couple of rollers allows a sliding of a door panel with a thickness of 8 to 10.7 mm and a weight up to 80 Kg.

The roller technology allows the height of the studs and the wheel to be adjusted to ease the position of the door panel.

The fixing parts allow a frontal fitment of the track according to the type of installation: on the wall or glass partition.

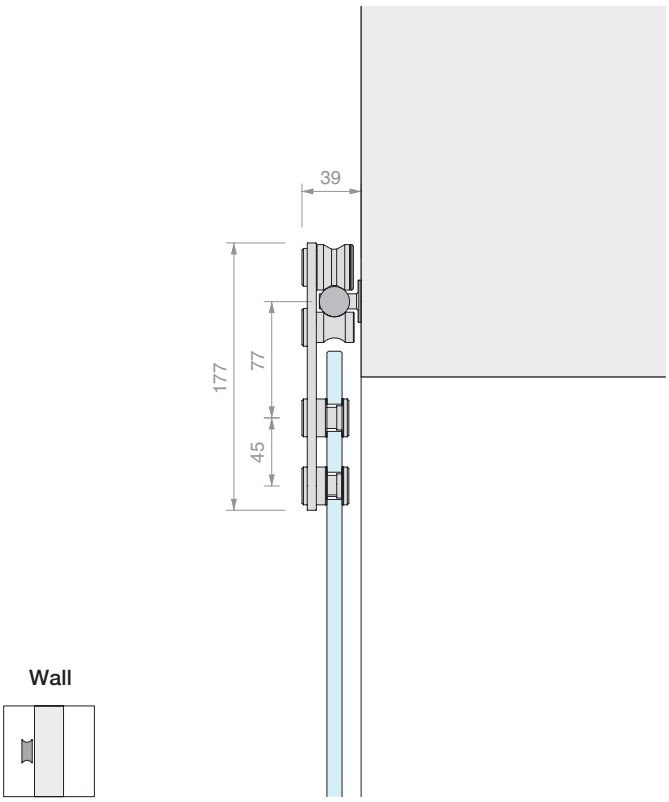

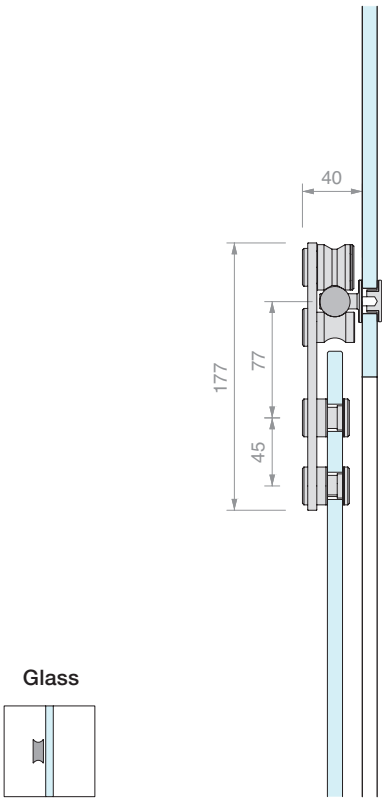

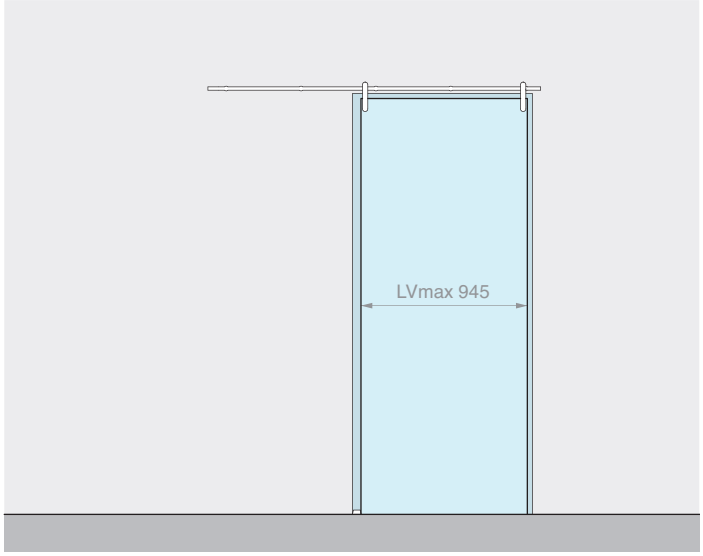

Kit comprising: Finish: /8

Art.	Description	Qty
GLM3000	Kit of 2 rollers	1 Pc
GLMTND20	Round track L = 2000 mm	1 Pc
GLMBRM	Wall fixing	5 Pcs
GLM3023	Oval end stop	2 Pcs
057.3030.071	Adjustable floor guide	1 Pc
Optional		
UT200	Pin wrench	1 Pc

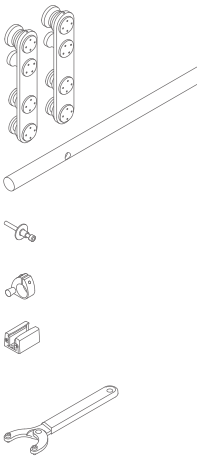

Art.	Description	For glass	Max. load	Qty
GLM30002MUR	Wall fixing sliding door kit	From **8** to **10.7** mm	**80** kg	1 Pc

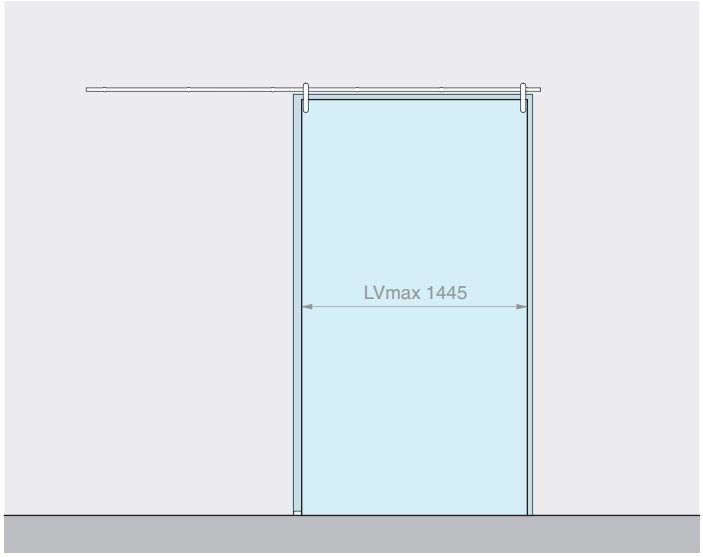

Kit comprising: Finish: /8

Art.	Description	Qty
GLM3000	Kit of 2 rollers	1 Pc
GLMTND30	Round track L = 3000 mm	1 Pc
GLMBRM	Wall fixing	6 Pcs
GLM3023	Oval end stop	2 Pcs
057.3030.071	Adjustable floor guide	1 Pc
Optional		
UT200	Pin wrench	1 Pc

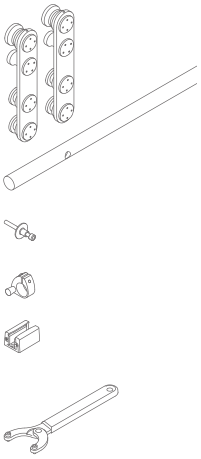

Art.	Description	For glass	Max. load	Qty
GLM30003MUR	Wall fixing sliding door kit	From **8** to **10.7** mm	**80** kg	1 Pc

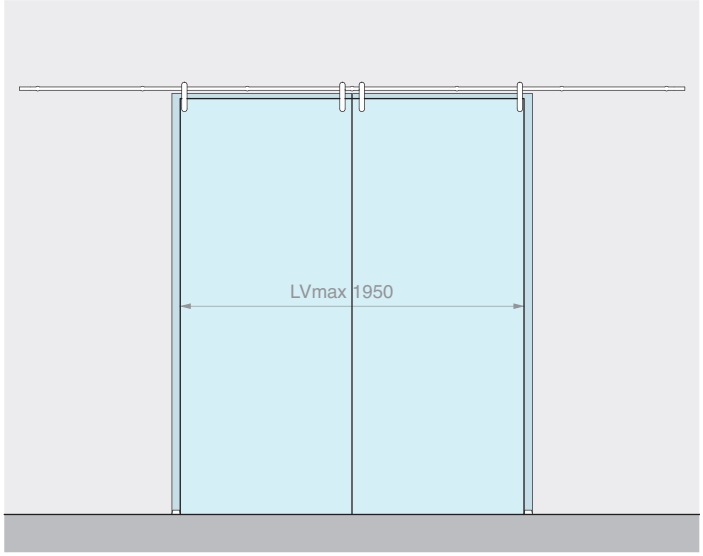

Kit comprising: Finish: /8

Art.	Description	Qty
GLM3000	Kit of 2 rollers	2 Pcs
GLMTND40	Round track L = 4000 mm	1 Pc
GLMBRM	Wall fixing	7 Pcs
GLM3023	Oval end stop	4 Pcs
057.3030.071	Adjustable floor guide	2 Pcs
Optional		
UT200	Pin wrench	1 Pc

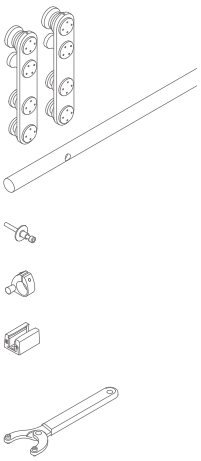

Art.	Description	For glass	Max. load	Qty
GLM30004MUR	Wall fixing sliding door kit for 2 door panels	From **8** to **10.7** mm	**80** + **80** kg	1 Pc

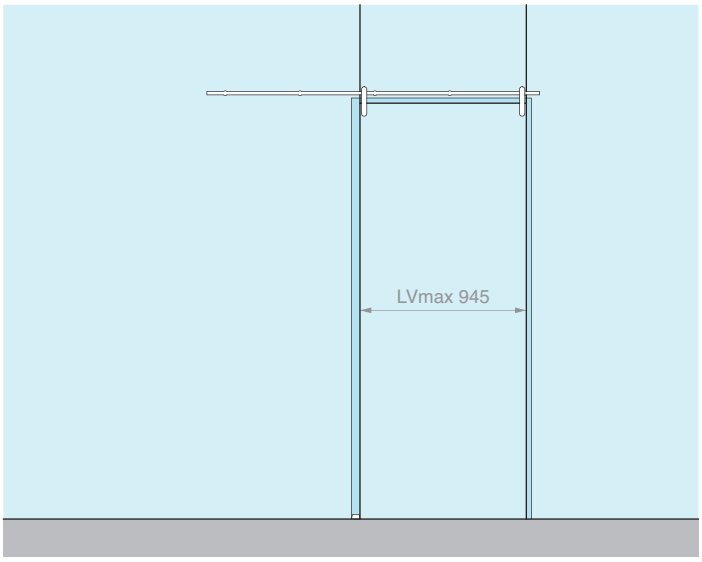

Kit comprising: Finish: /8

Art.	Description	Qty
GLM3000	Kit of 2 rollers	1 Pc
GLMTND20	Round track L = 2000 mm	1 Pc
GLMBRV	Glass fixing	5 Pcs
GLM3023	Oval end stop	2 Pcs
057.3030.071	Adjustable floor guide	1 Pc
Optional		
UT200	Pin wrench	1 Pc

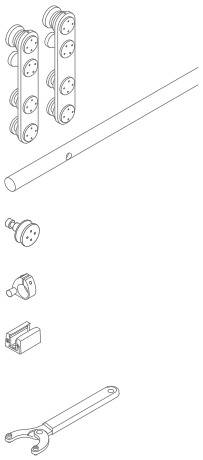

Art.	Description	For glass	Max. load	Qty
GLM30002VET	Glass fixing sliding door kit	From **8** to **10.7** mm	**80** kg	1 Pc

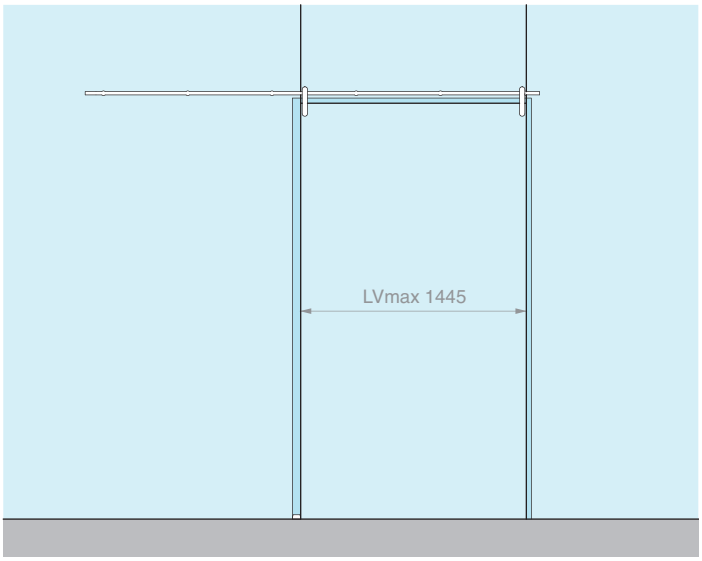

Kit comprising: Finish: /8

Art.	Description	Qty
GLM3000	Kit of 2 rollers	1 Pc
GLMTND30	Round track L = 3000 mm	1 Pc
GLMBRV	Glass fixing	6 Pcs
GLM3023	Oval end stop	2 Pcs
057.3030.071	Adjustable floor guide	1 Pc
Optional		
UT200	Pin wrench	1 Pc

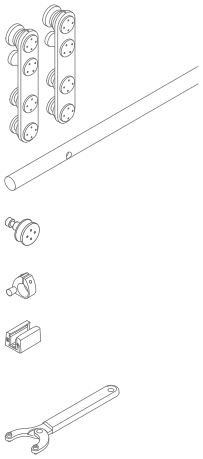

Art.	Description	For glass	Max. load	Qty
GLM30003VET	Glass fixing sliding door kit	From **8** to **10.7** mm	**80** kg	1 Pc

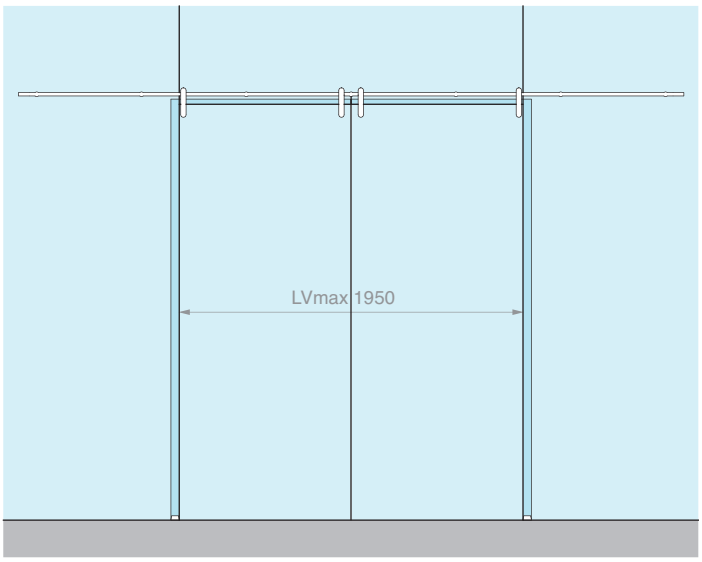

Kit comprising: Finish: /8

Art.	Description	Qty
GLM3000	Kit of 2 rollers	2 Pcs
GLMTND40	Round track L = 4000 mm	1 Pc
GLMBRV	Glass fixing	7 Pcs
GLM3023	Oval end stop	4 Pcs
057.3030.071	Adjustable floor guide	2 Pcs
Optional		
UT200	Pin wrench	1 Pc

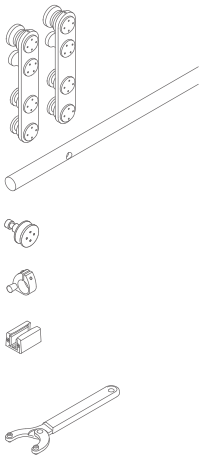

Art.	Description	For glass	Max. load	Qty
GLM30004VET	Glass fixing sliding door kit for 2 door panels	From **8** to **10.7** mm	**80** + **80** kg	1 Pc

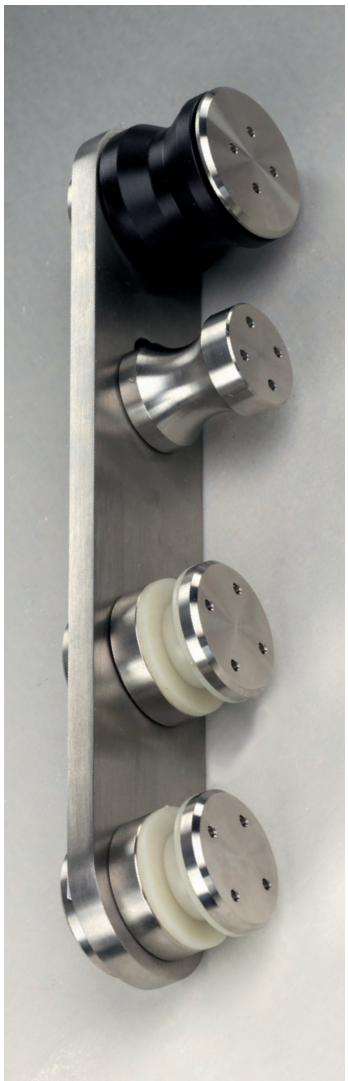

ROLLER

Material: AISI 304 stainless steel
Recommended holes size Ø18 mm
Recommended tool for tightening Art. UT200
Finish: /9 /15

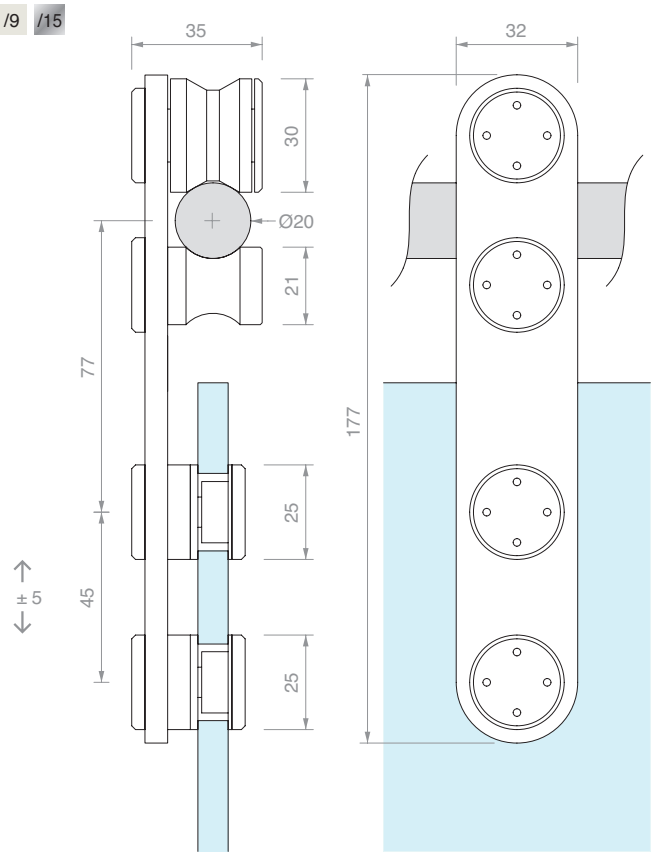

Art.	Description	For glass thickness	Qty.
GLM3050	Single roller	From **8** to **10.7** mm	1 Pc
GLM3000	Kit of 2 rollers	From **8** to **10.7** mm	1 Pc

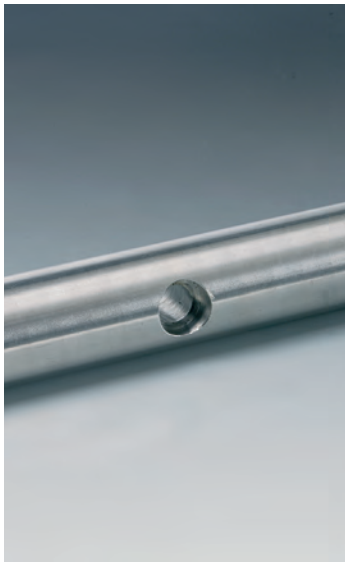

DRILLED SOLID ROUND TRACK

Material: AISI 304 stainless steel
Finish: /8 /15

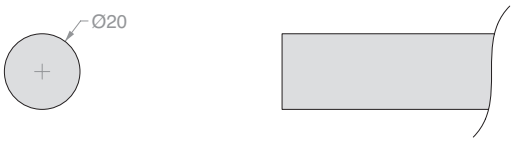

Track drilling pattern:

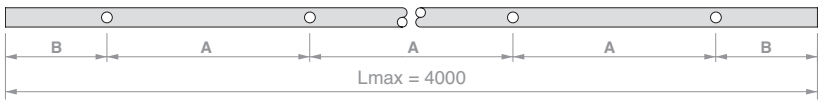

Art.	Length	No. holes	Dimensions		Qty
GLMTND20	**2000** mm	**5**	A **450** mm	B **100** mm	1 Pc
GLMTND30	**3000** mm	**6**	A **560** mm	B **100** mm	1 Pc
GLMTND40	**4000** mm	**7**	A **633** mm	B **100** mm	1 Pc
GLMBDLN15	**cut to size**	**-**	**-**	**-**	1 m
GLMFORO	**Hole** for GLMBDLN15	**1**	**cut to size**	**cut to size**	1 Pc

WALL FIXING

Material: AISI 304 stainless steel
Finish: /9 /15

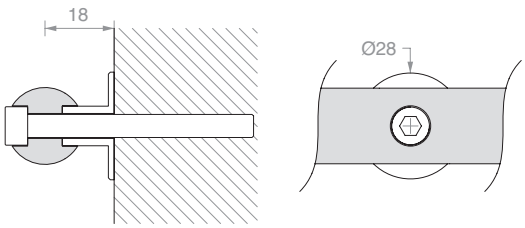

Art.	Description	Qty
GLMBRM	With **M6** mm x **30** mm screws	1 Pc

GLASS FIXING

Material: AISI 304 stainless steel
Recommended hole size Ø18 mm
Recommended tool for tightening Art. UT200
Finish: /9 /15

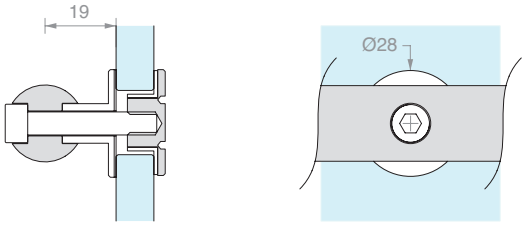

Art.	Description	For glass	Qty
GLMBRV	With **M6** mm x **30** mm screws	From **8** to **12** mm	1 Pc

SIDE WALL FIXING

Material: AISI 304 stainless steel
Finish: /9 /15

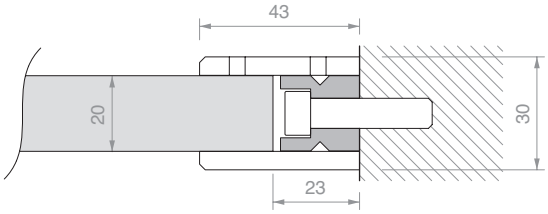

Art.	Qty
GLMDSTP	1 Pc

SIDE GLASS FIXING

Material: AISI 304 stainless steel
Recommended hole size Ø15 mm
Recommended tool for tightening Art. UT200
Finish: /9 /15

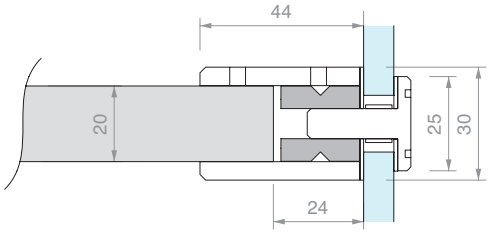

Art.	For glass	Qty
GLMDSTV	From **8** to **15** mm	1 Pc

OVAL END STOP WITH RUBBER BUMPER

Material: AISI 304 stainless steel
Finish: /9 /15

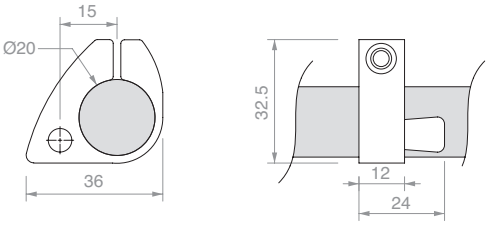

Art.	Qty
GLM3023	1 Pc

ADJUSTABLE FLOOR GUIDE

Material: aluminium
Finish: /88 /91 /97 /R2

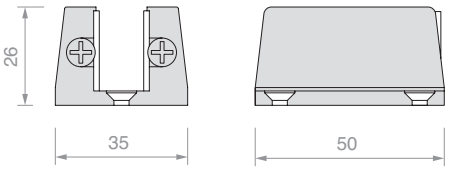

Art.	For glass	Qty
057.3030.071	From **6** to **12.7** mm	1 Pc

PIN WRENCH

Material: iron body, steel pins
The compass opening allows to operate with wide radiuses,
for pair of holes with a centre distance between 9 mm and 55 mm

Art.	Description	Qty
UT200	Pin wrench with Ø1.9 mm pins	1 Pc
UTC200R	2 replacements pins Ø1.9 mm	1 Pc

TRACK FIXING

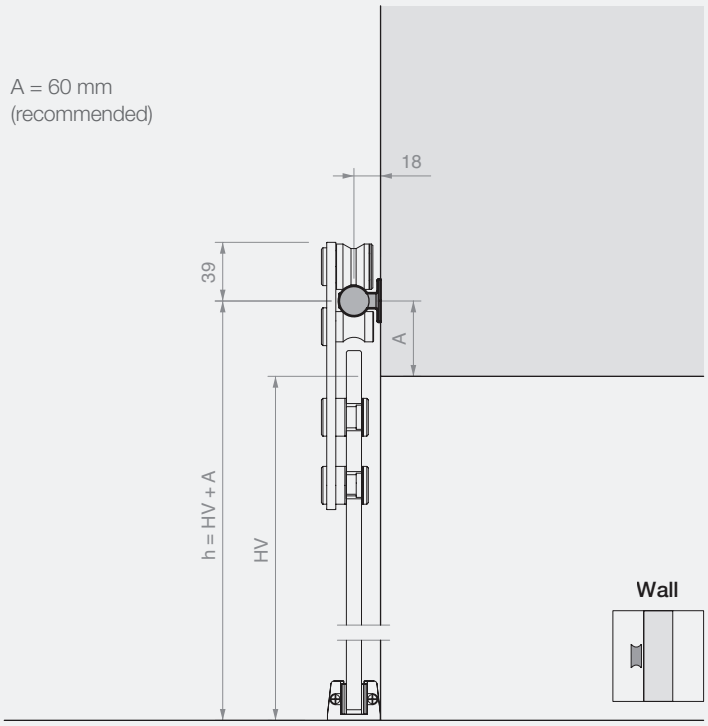

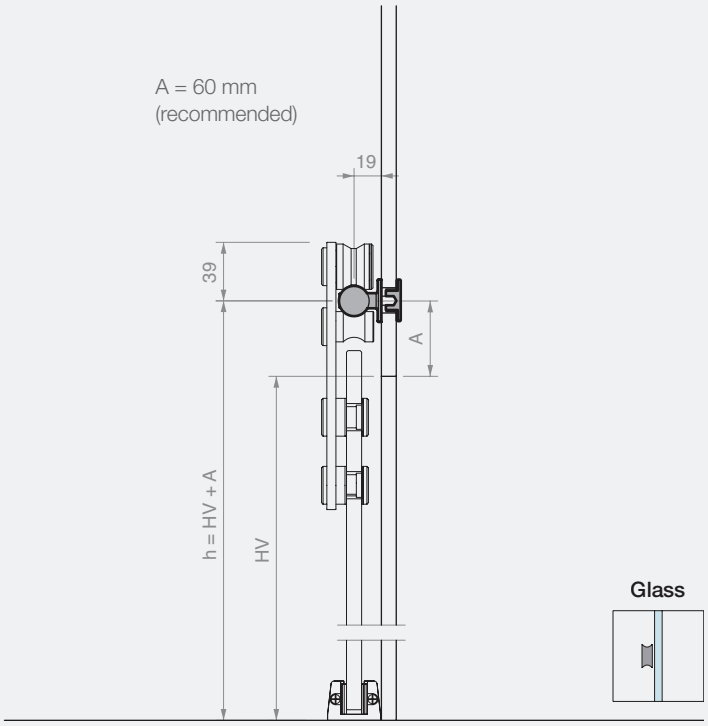

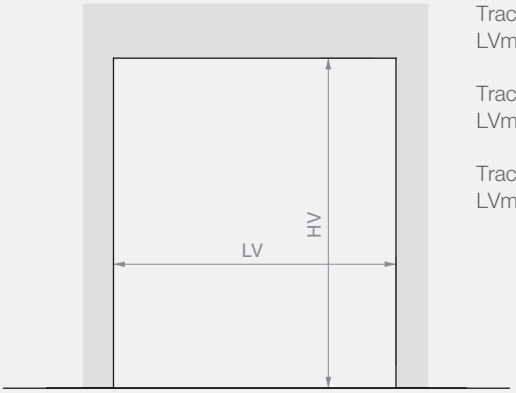

Track L = 2000 mm
LVmax 945 mm

Track L = 3000 mm
LVmax 1445 mm

Track L = 4000 mm
LVmax 1950 mm

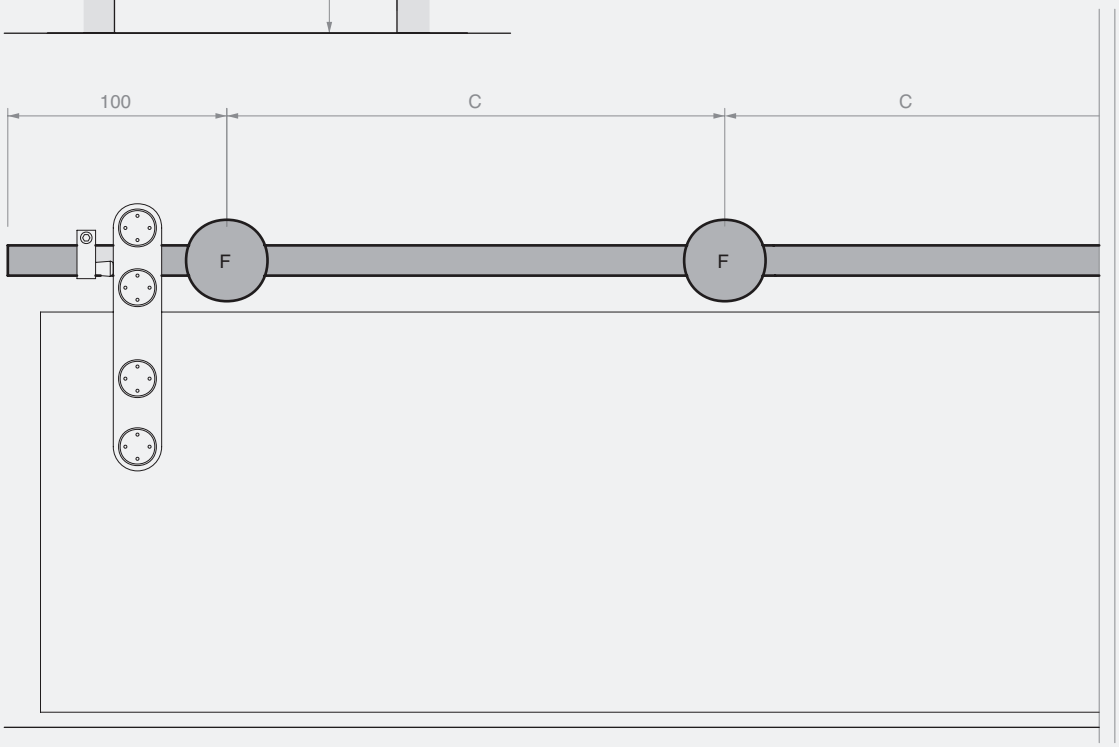

Track L = 2000 mm
5 fixings (F)
C = 450 mm

Track L = 3000 mm
6 fixings (F)
C = 560 mm

Track L = 4000 mm
7 fixings (F)
C = 633 mm

CALCULATION OF DIMENSIONS AND DRILLING OF GLASS PANELS

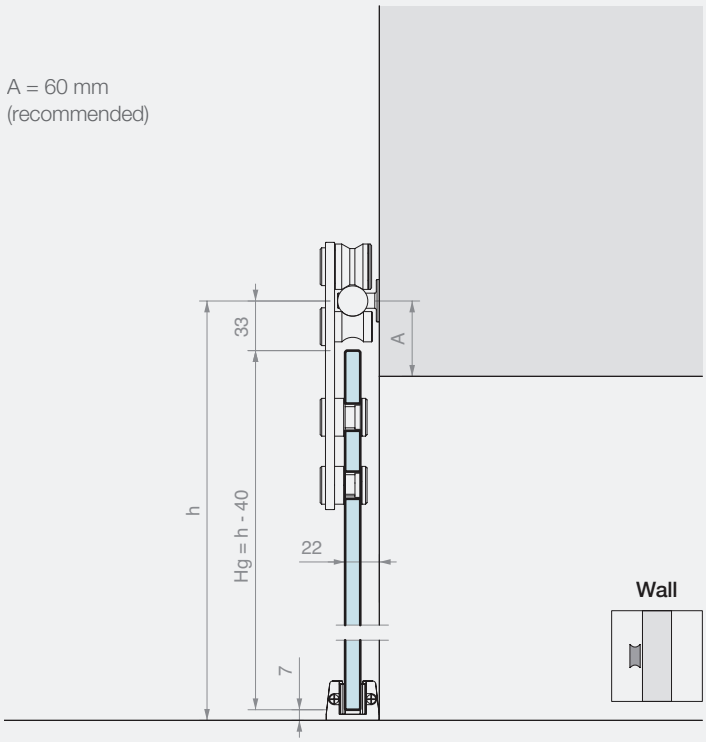

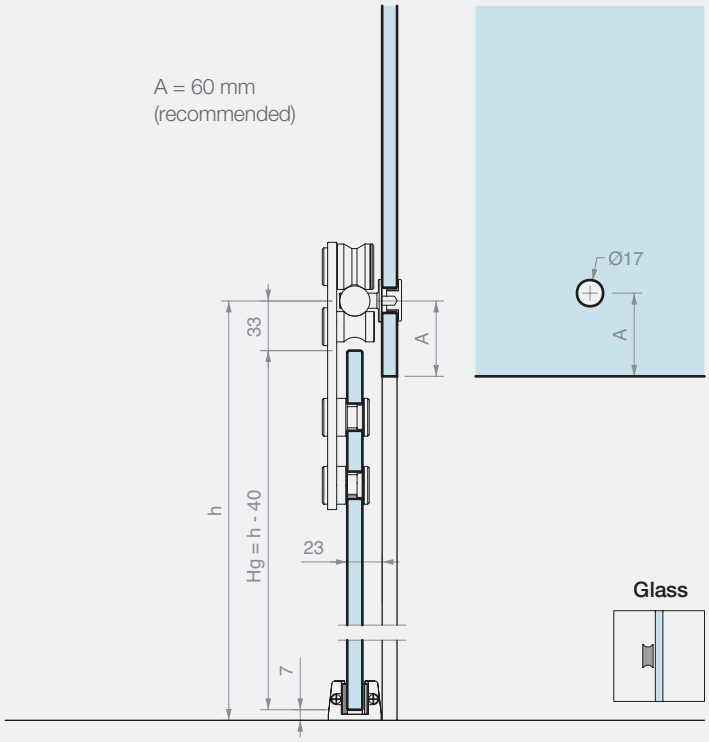

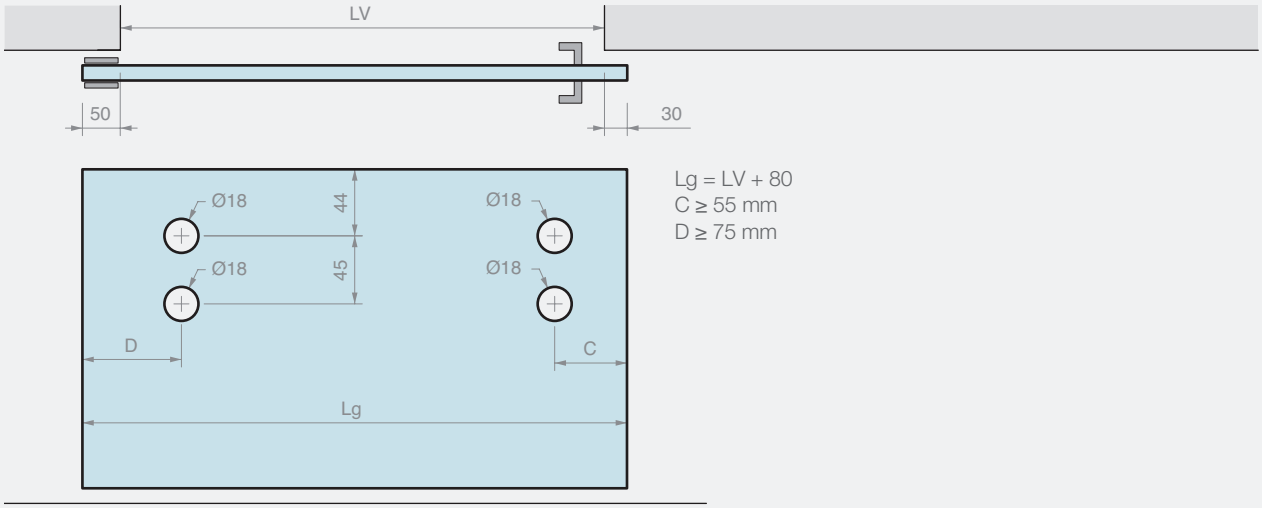

Lg = LV + 80
C ≥ 55 mm
D ≥ 75 mm

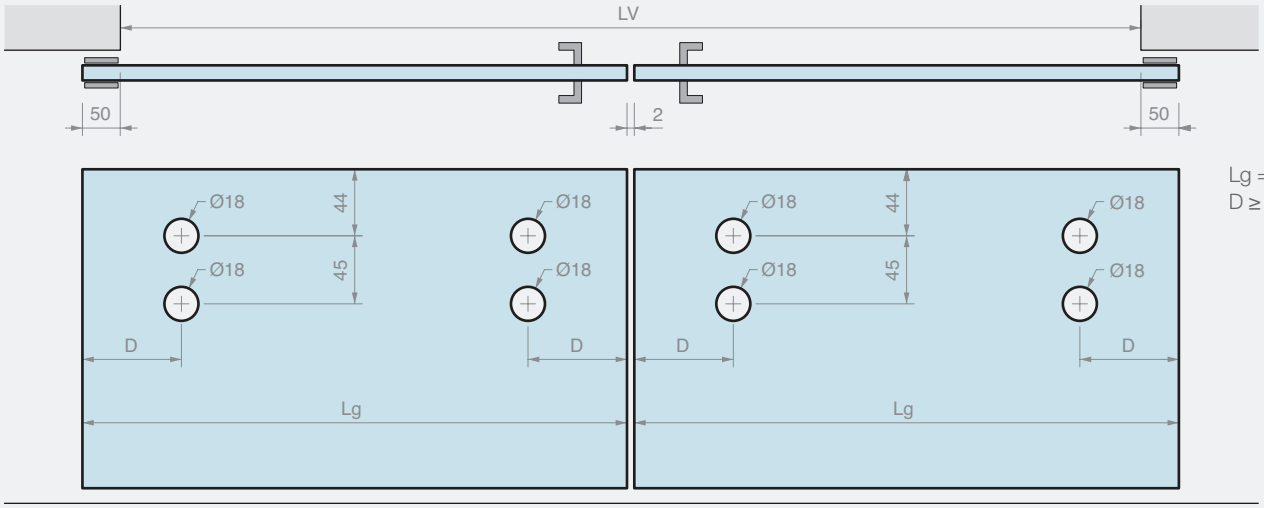

Lg = (LV + 98)/2
D ≥ 75 mm

GIUMAX 3200

AISI 304 stainless steel sliding door system composed of a round load-bearing track, visible wheels and fixing accessories.

The door panel is fitted on the track using a wheel and is secured by an anti-derailment pin. The couple of wheels allows a sliding of a door panel with a wide range of thickness, from 6 to 12.7 mm and a weight up to 80 kg.

The system seeks to maximum transparency by using small accessories and a minimal design.

The fixing parts allow a customised fitment of the track according to the type of installation: on the wall, glass partition or ceiling.

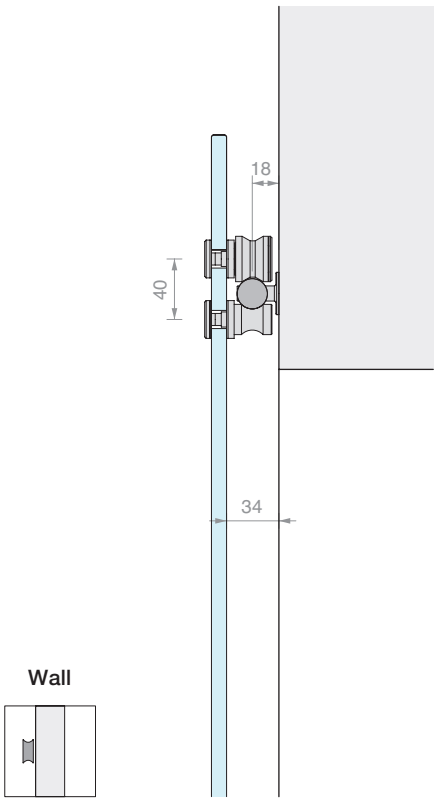

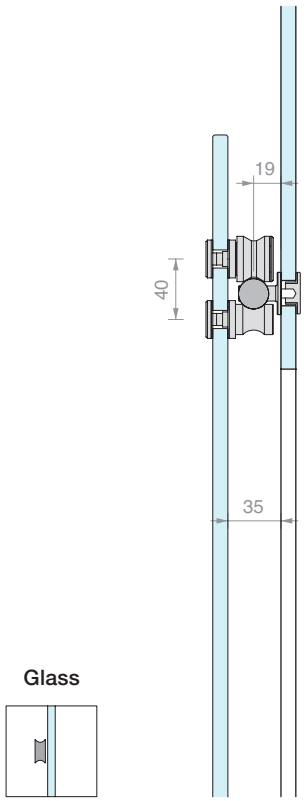

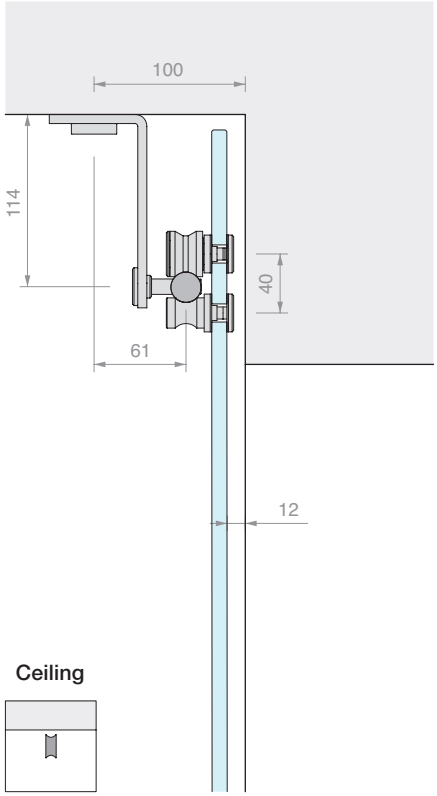

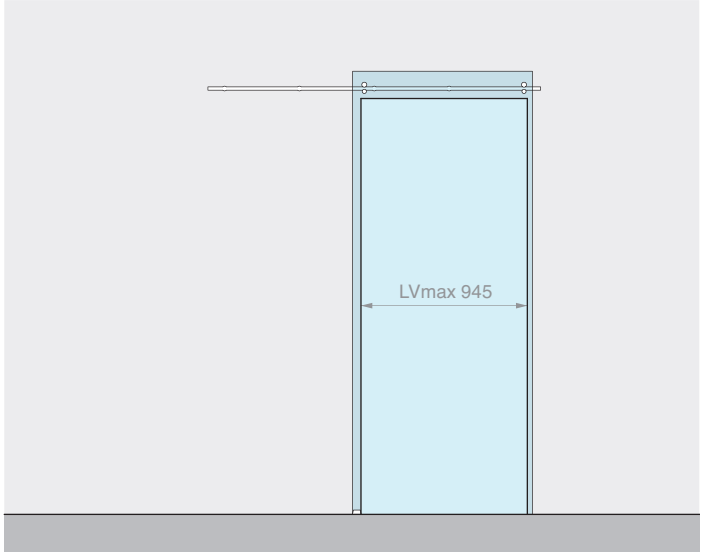

Kit comprising: Finish: /8

Art.	Description	Qty
GLM7000	Kit of 2 wheels + 2 pins	1 Pc
GLMTND20	Round track L = 2000 mm	1 Pc
GLMBRM	Wall fixing	5 Pcs
GLM3020	End stop	2 Pcs
057.3030.071	Adjustable floor guide	1 Pc
Optional		
UT200	Pin wrench	1 Pc

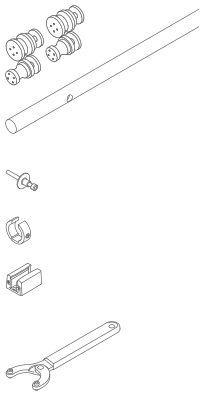

Art.	Description	For glass	Max. load	Qty
GLM32002PAR	Wall fixing sliding door kit	From **6** to **12.7** mm	**80** kg	1 Pc

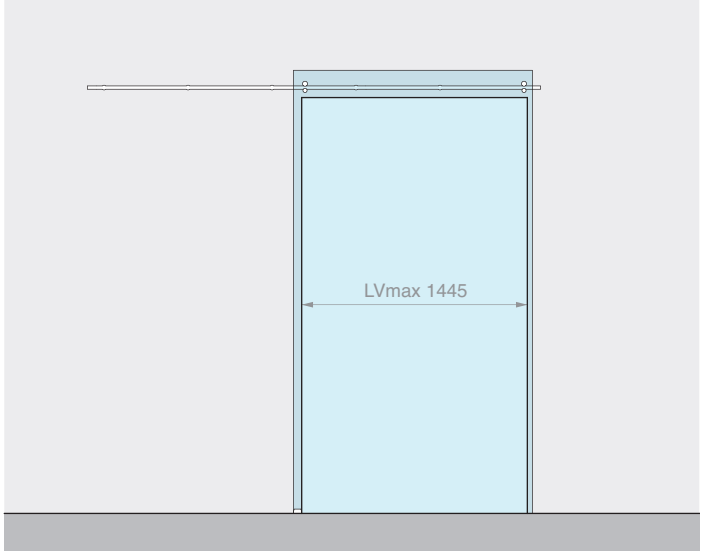

Kit comprising: Finish: /8

Art.	Description	Qty
GLM7000	Kit of 2 wheels + 2 pins	1 Pc
GLMTND30	Round track L = 3000 mm	1 Pc
GLMBRM	Wall fixing	6 Pcs
GLM3020	End stop	2 Pcs
057.3030.071	Adjustable floor guide	1 Pc
Optional		
UT200	Pin wrench	1 Pc

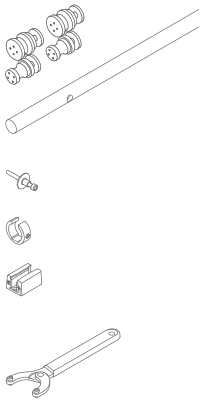

Art.	Description	For glass	Max. load	Qty
GLM32003PAR	Wall fixing sliding door kit	From **6** to **12.7** mm	**80** kg	1 Pc

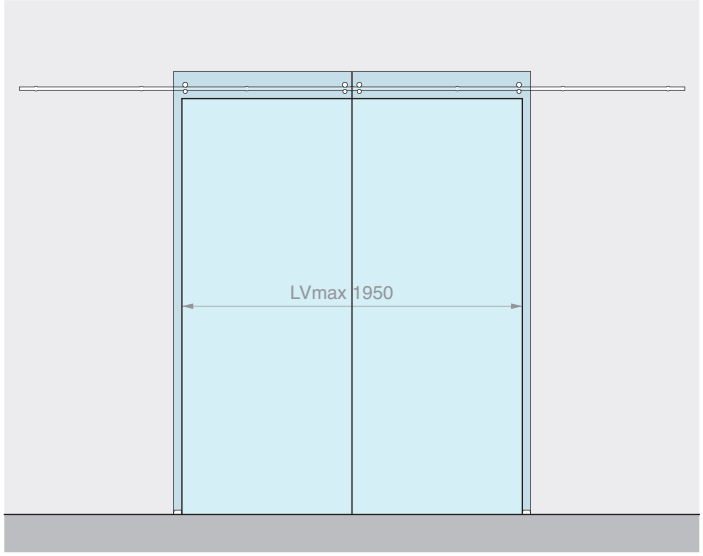

Kit comprising: Finish: /8

Art.	Description	Qty
GLM7000	Kit of 2 wheels + 2 pins	2 Pcs
GLMTND40	Round track L = 4000 mm	1 Pc
GLMBRM	Wall fixing	7 Pcs
GLM3020	End stop	4 Pcs
057.3030.071	Adjustable floor guide	2 Pcs
Optional		
UT200	Pin wrench	1 Pc

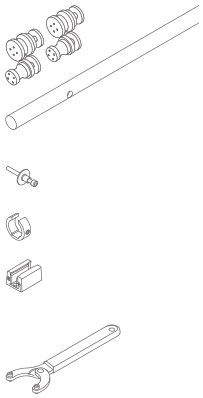

Art.	Description	For glass	Max. load	Qty
GLM32004PAR	Wall fixing sliding door kit for 2 door panels	From **6** to **12.7** mm	**80** + **80** kg	1 Pc

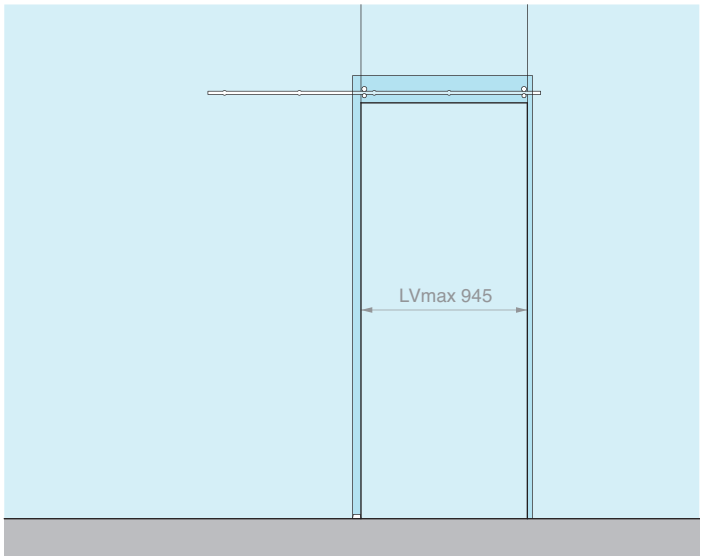

Kit comprising: Finish: /8

Art.	Description	Qty
GLM7000	Kit of 2 wheels + 2 pins	1 Pc
GLMTND20	Round track L = 2000 mm	1 Pc
GLMBRV	Glass fixing	5 Pcs
GLM3020	End stop	2 Pcs
057.3030.071	Adjustable floor guide	1 Pc
Optional		
UT200	Pin wrench	1 Pc

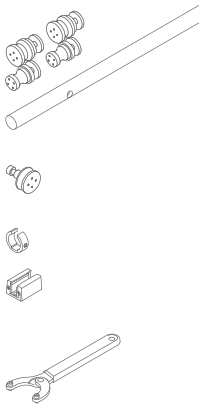

Art.	Description	For glass	Max. load	Qty
GLM32002VET	Glass fixing sliding door kit	From **6** to **12.7** mm	**80** kg	1 Pc

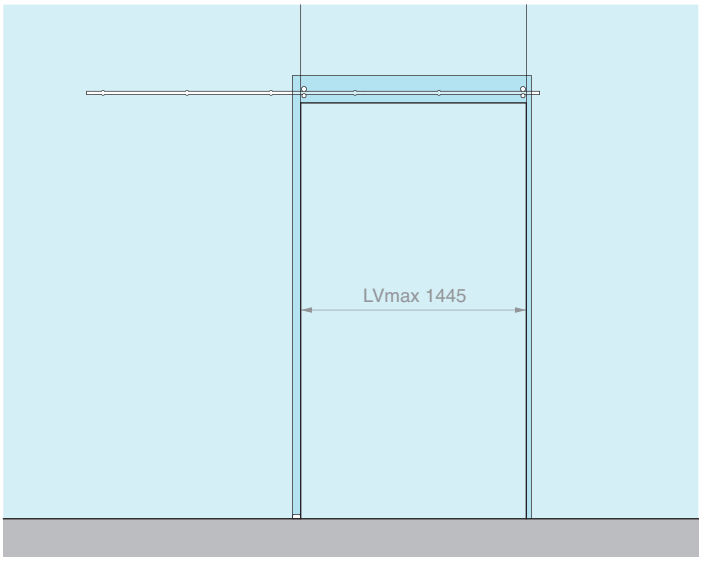

Kit comprising: Finish: /8

Art.	Description	Qty
GLM7000	Kit of 2 wheels + 2 pins	1 Pc
GLMTND30	Round track L = 3000 mm	1 Pc
GLMBRV	Glass fixing	6 Pcs
GLM3020	End stop	2 Pcs
057.3030.071	Adjustable floor guide	1 Pc
Optional		
UT200	Pin wrench	1 Pc

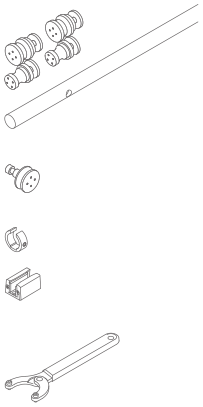

Art.	Description	For glass	Max. load	Qty
GLM32003VET	Glass fixing sliding door kit	From **6** to **12.7** mm	**80** kg	1 Pc

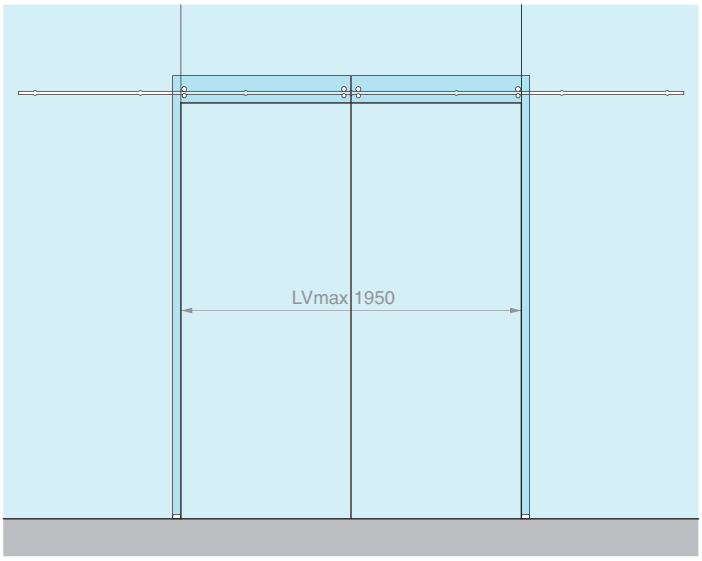

Kit comprising: Finish: /8

Art.	Description	Qty
GLM7000	Kit of 2 wheels + 2 pins	2 Pcs
GLMTND40	Round track L = 4000 mm	1 Pc
GLMBRV	Glass fixing	7 Pcs
GLM3020	End stop	4 Pcs
057.3030.071	Adjustable floor guide	2 Pcs
Optional		
UT200	Pin wrench	1 Pc

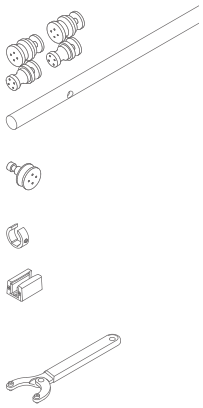

Art.	Description	For glass	Max. load	Qty
GLM32004VET	Glass fixing sliding door kit for 2 door panels	From **6** to **12.7** mm	**80** + **80** kg	1 Pc

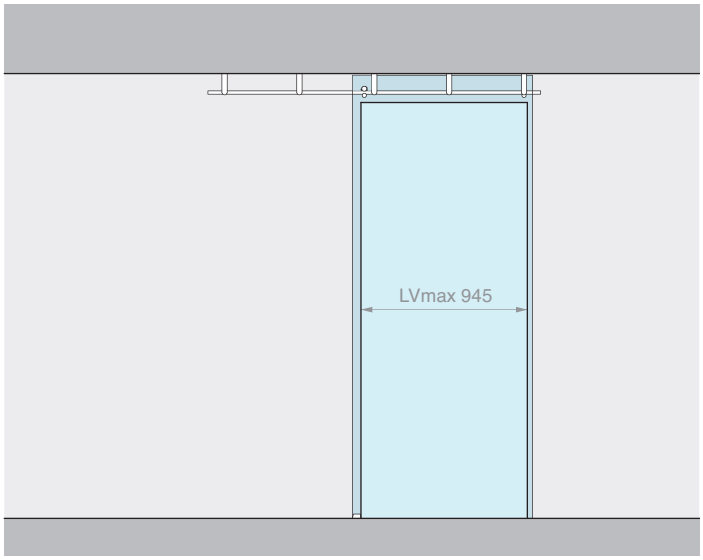

Kit comprising: Finish: /8

Art.	Description	Qty
GLM7000	Kit of 2 wheels + 2 pins	1 Pc
GLMTND20	Round track L = 2000 mm	1 Pc
GLMSST	Ceiling fixing	5 Pcs
GLM3020	End stop	2 Pcs
057.3030.071	Adjustable floor guide	1 Pc

Optional

UT200	Pin wrench	1 Pc

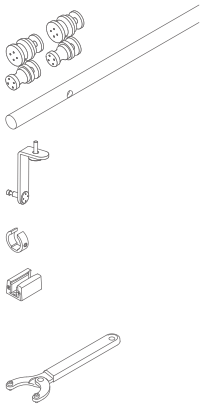

Art.	Description	For glass	Max. load	Qty
GLM32002PLA	Ceiling fixing sliding door kit	From **6** to **12.7** mm	**80** kg	1 Pc

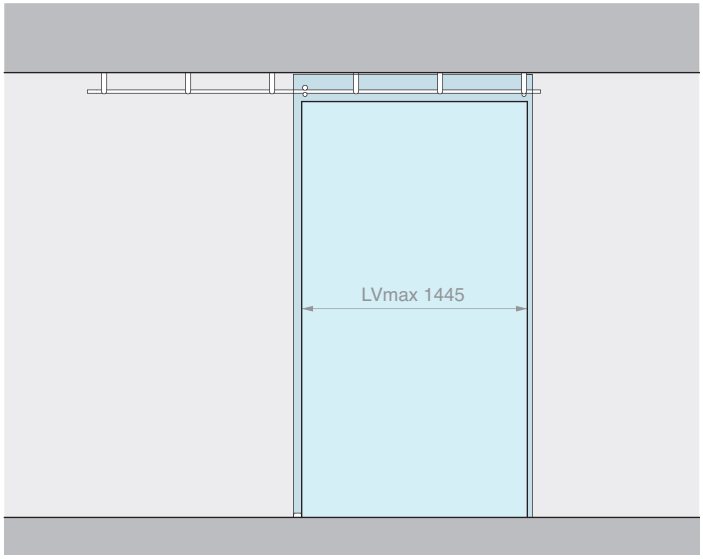

Kit comprising: Finish: /8

Art.	Description	Qty
GLM7000	Kit of 2 wheels + 2 pins	1 Pc
GLMTND30	Round track L = 3000 mm	1 Pc
GLMSST	Ceiling fixing	6 Pcs
GLM3020	End stop	2 Pcs
057.3030.071	Adjustable floor guide	1 Pc

Optional

UT200	Pin wrench	1 Pc

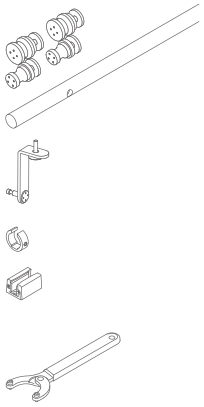

Art.	Description	For glass	Max. load	Qty
GLM32003PLA	Ceiling fixing sliding door kit	From **6** to **12.7** mm	**80** kg	1 Pc

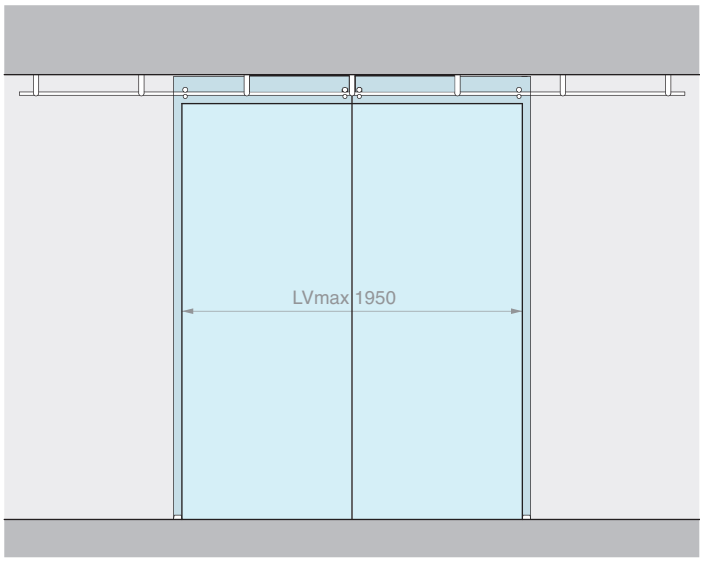

Kit comprising: Finish: /8

Art.	Description	Qty
GLM7000	Kit of 2 wheels + 2 pins	2 Pcs
GLMTND40	Round track L = 4000 mm	1 Pc
GLMSST	Ceiling fixing	7 Pcs
GLM3020	End stop	4 Pcs
057.3030.071	Adjustable floor guide	2 Pcs

Optional

UT200	Pin wrench	1 Pc

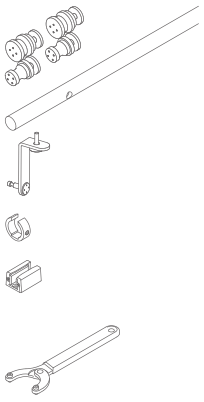

Art.	Description	For glass	Max. load	Qty
GLM32004PLA	Ceiling fixing sliding door kit for 2 door panels	From **6** to **12.7** mm	**80** + **80** kg	1 Pc

WHEELS

Material: AISI 304 stainless steel
Recommended holes size GLMRCT Ø12 mm
Recommended holes size GLMAN Ø17 mm
Recommended tool for tightening Art. UT200
Finish: /9 /15

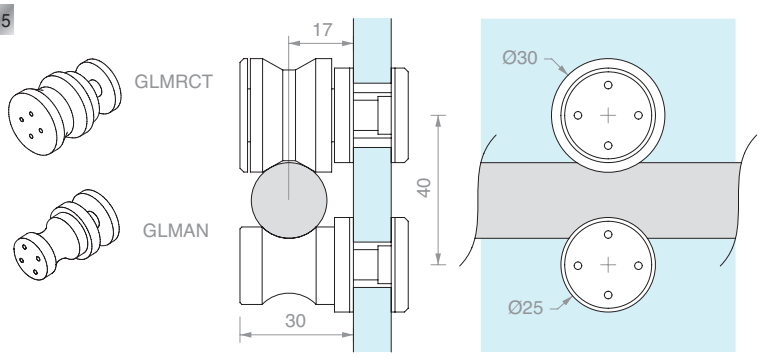

Art.	Description	For glass thickness	Qty.
GLMRCT	Sliding wheel	From **6** to **12.7** mm	1 Pc
GLMAN	Anti-derailment pin	From **6** to **12.7** mm	1 Pc
GLM7000	Kit of 2 wheels + 2 pins	From **6** to **12.7** mm	1 Pc

DRILLED SOLID ROUND TRACK

Material: AISI 304 stainless steel
Finish: /8 /15

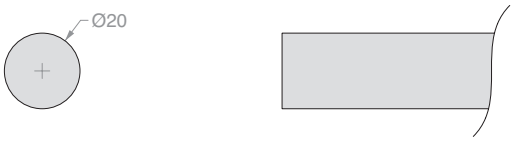

Track drilling pattern:

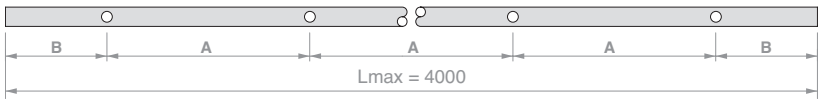

Art.	Length	No. holes	Dimensions		Qty
GLMTND20	**2000** mm	**5**	A **450** mm	B **100** mm	1 Pc
GLMTND30	**3000** mm	**6**	A **560** mm	B **100** mm	1 Pc
GLMTND40	**4000** mm	**7**	A **633** mm	B **100** mm	1 Pc
GLMBDLN15	**cut to size**	**-**	**-**	**-**	1 m
GLMFORO	**Hole** for GLMBDLN15	**1**	**cut to size**	**cut to size**	1 Pc

WALL FIXING

Material: AISI 304 stainless steel
Finish: /9 /15

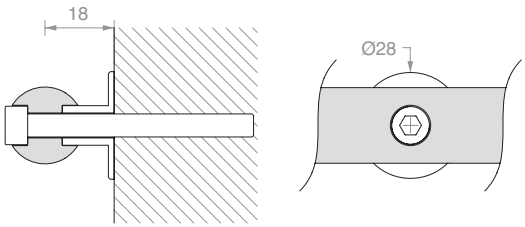

Art.	Description	Qty
GLMBRM	With **M6** mm x **30** mm screws	1 Pc

GLASS FIXING

Material: AISI 304 stainless steel
Recommended hole size Ø18 mm
Recommended tool for tightening Art. UT200
Finish: /9 /15

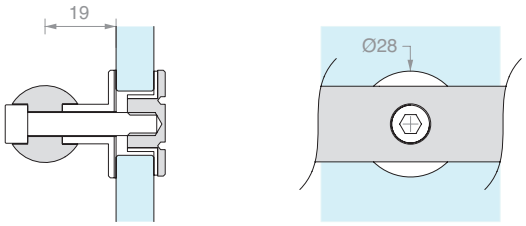

Art.	Description	For glass	Qty
GLMBRV	With **M6** mm x **30** mm screws	From **8** to **12** mm	1 Pc

CEILING FIXING

Material: AISI 304 stainless steel

Finish: /9 /15

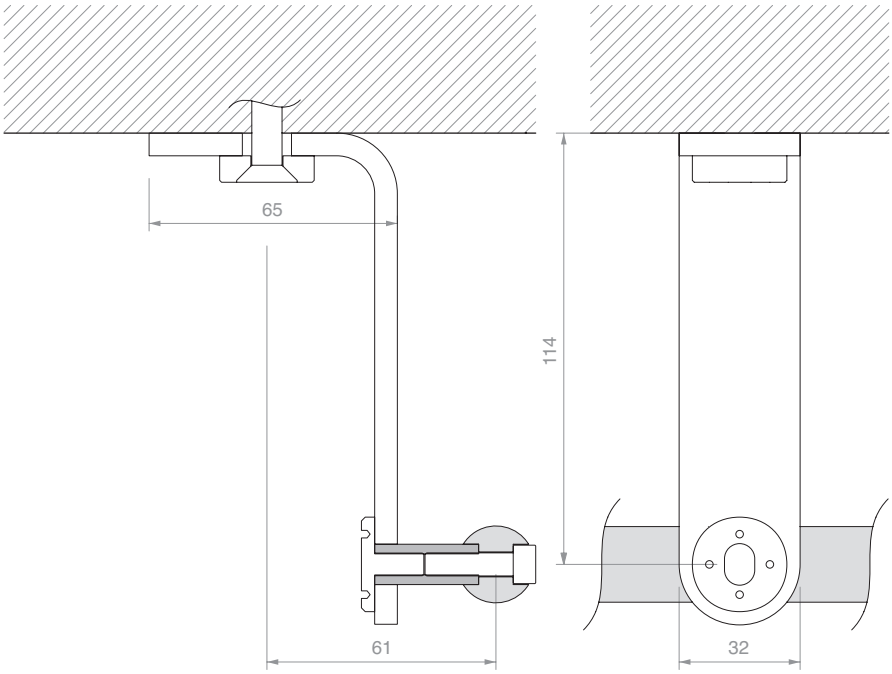

Art.	Qty
GLMSST	1 Pc

SIDE WALL FIXING

Material: AISI 304 stainless steel

Finish: /9 /15

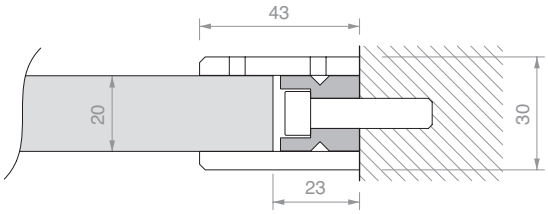

Art.	Qty
GLMDSTP	1 Pc

SIDE GLASS FIXING

Material: AISI 304 stainless steel

Recommended hole size Ø15 mm

Recommended tool for tightening Art. UT200

Finish: /9 /15

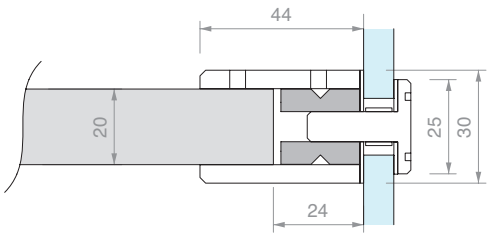

Art.	For glass	Qty
GLMDSTV	From **8** to **15** mm	1 Pc

END STOP

Material: AISI 304 stainless steel

Finish: /9 /15

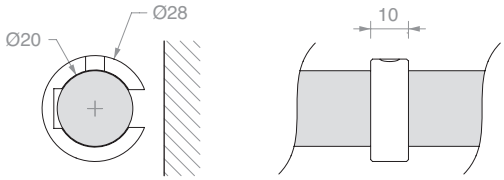

Art.	Qty
GLM3020	1 Pc

ADJUSTABLE FLOOR GUIDE

Material: aluminium

Finish: /88 /91 /97 /R2

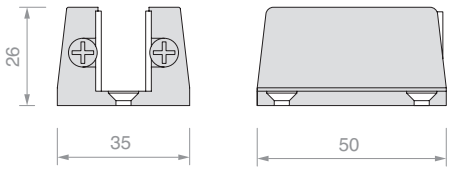

Art.	For glass	Qty
057.3030.071	From **6** to **12.7** mm	1 Pc

PIN WRENCH

Material: iron body, steel pins

The compass opening allows to operate with wide radiuses,
for pair of holes with a centre distance between 9 mm and 55 mm

Art.	Description	Qty
UT200	Pin wrench with Ø1.9 mm pins	1 Pc
UTC200R	2 replacements pins Ø1.9 mm	1 Pc

TRACK FIXING

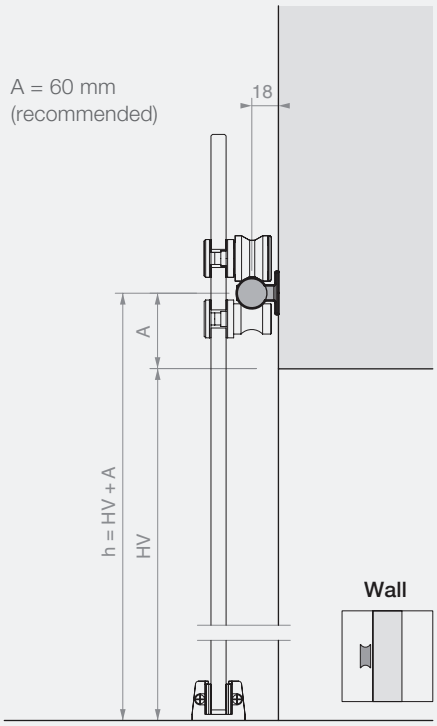

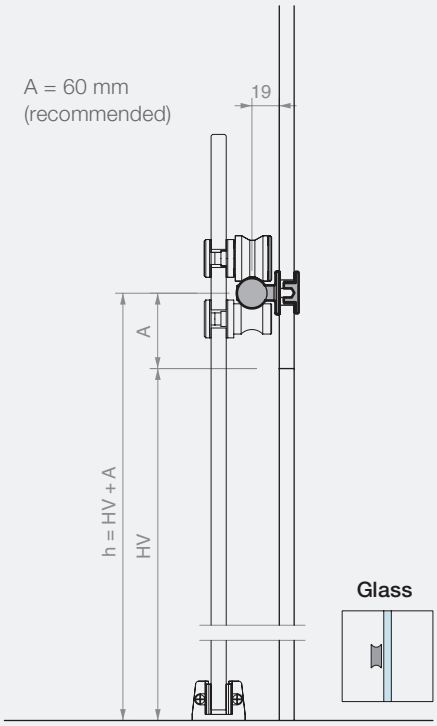

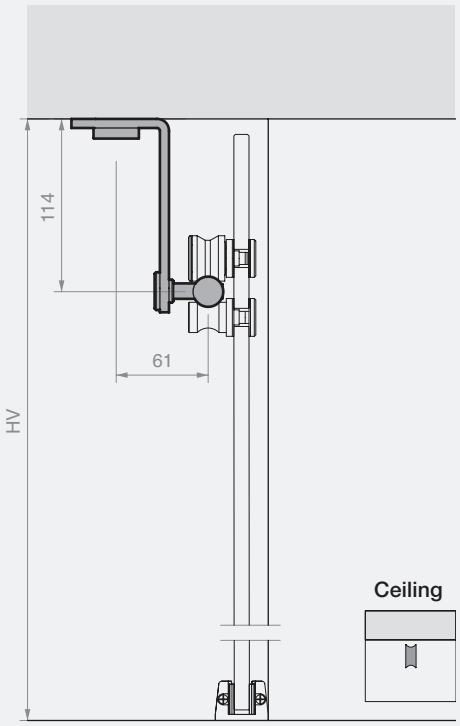

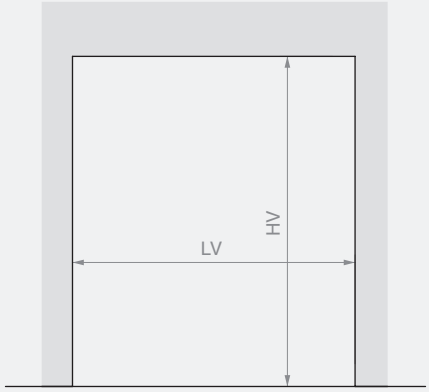

Track L = 2000 mm
LVmax 945 mm

Track L = 3000 mm
LVmax 1445 mm

Track L = 4000 mm
LVmax 1950 mm

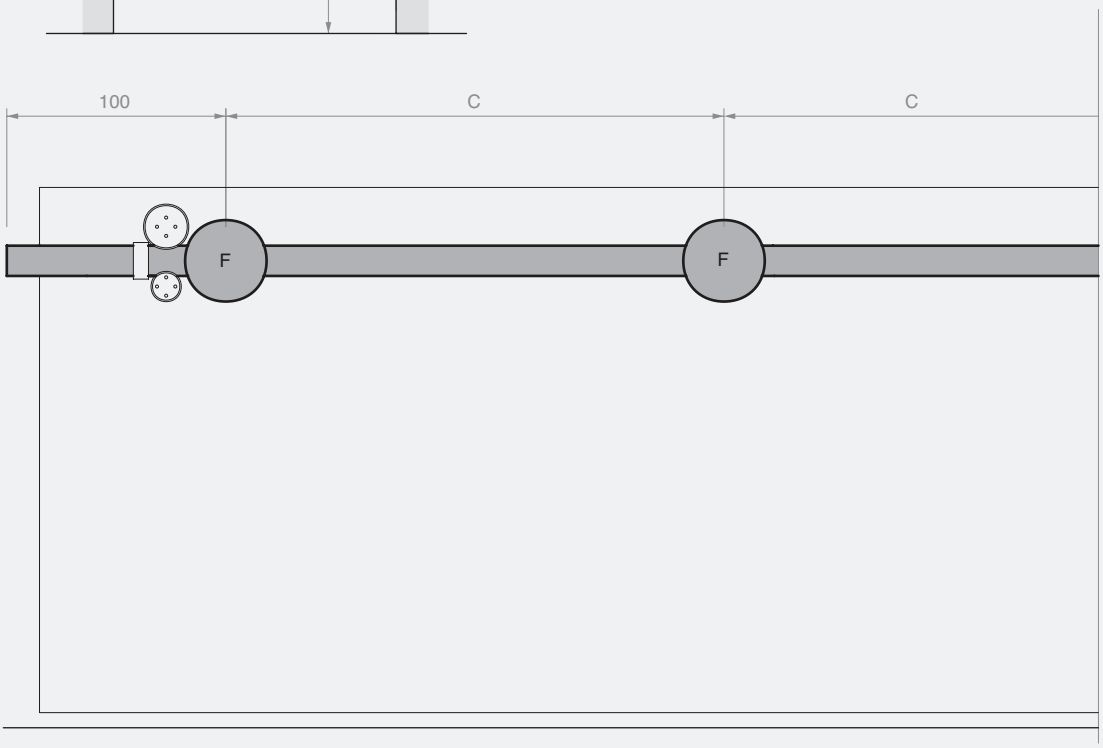

Track L = 2000 mm
5 fixings (F)
C = 450 mm

Track L = 3000 mm
6 fixings (F)
C = 560 mm

Track L = 4000 mm
7 fixings (F)
C = 633 mm

CALCULATION OF DIMENSIONS AND DRILLING OF GLASS PANELS

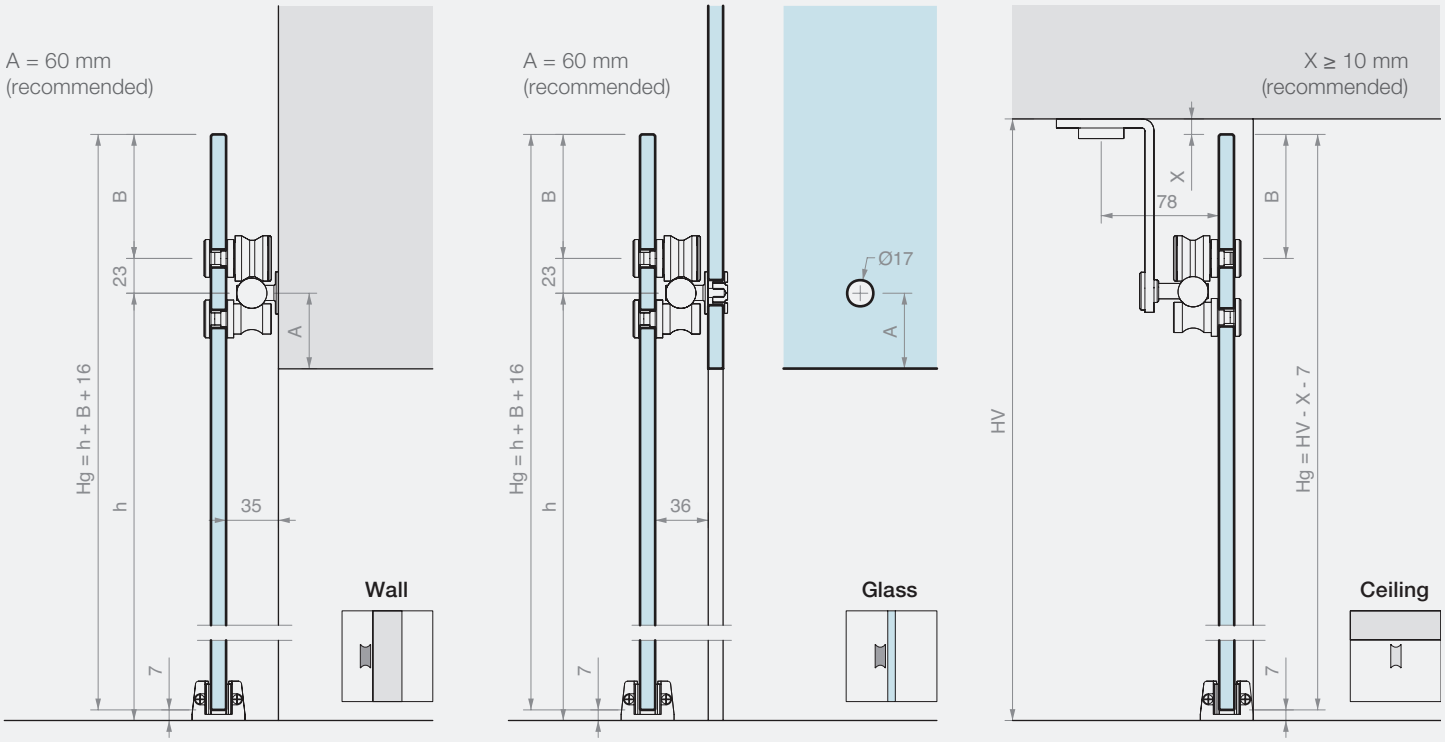

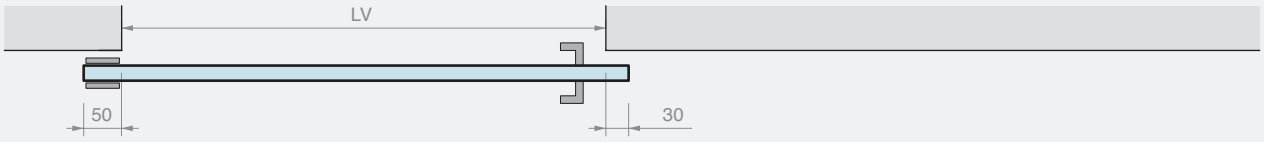

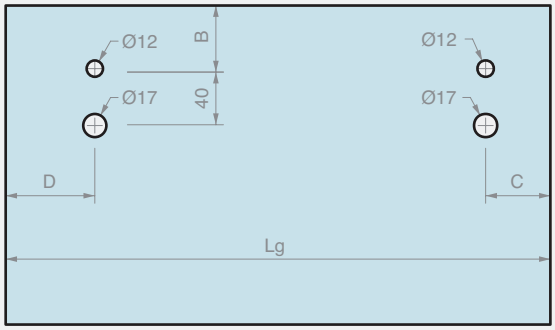

Lg = LV + 80
C ≥ 50 mm
D ≥ 70 mm

WALL/GLASS FIXING
B ≥ 30 mm (recommended)

CEILING FIXING
B = 92 mm - X

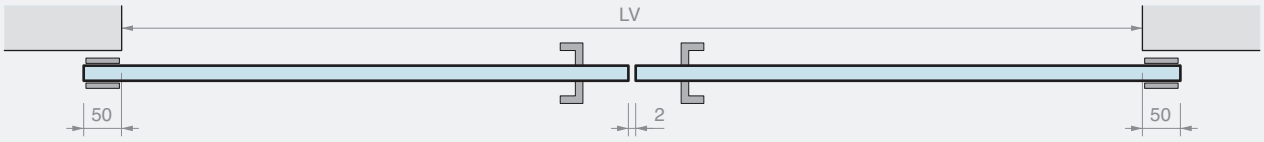

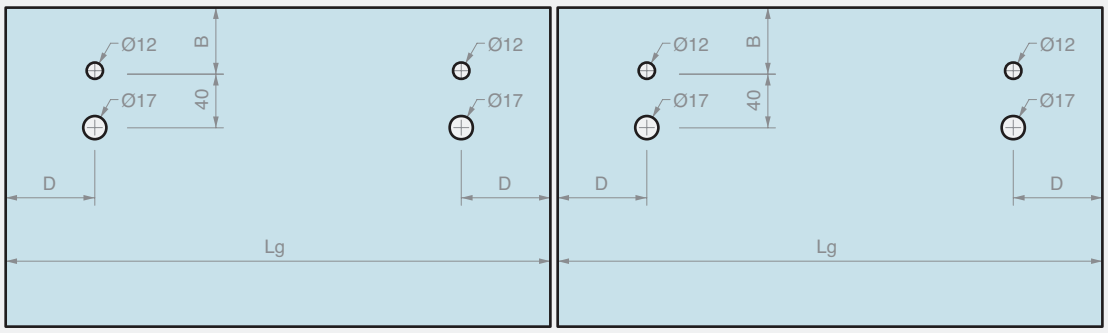

Lg = (LV + 98)/2
D ≥ 70 mm

FIXING
WALL/GLASS
B ≥ 30 mm (recommended)

FIXING
CEILING
B = 92 mm - X

GIUMAX 8500

AISI 304 stainless steel sliding door system composed of a solid half-round track, visible wheels and fixing accessories.

The door panel is fitted on the track using a wheel and is secured under the track by an anti-derailment wheel. The couple of wheels allows a sliding of a door panel with a big thickness, from 12 to 17.5 mm and a heavy weight, up to 150 kg.

The system seeks to maximum transparency, combined with a high-tech design of the wheel and the carefully crafted shape of the track.

The fixing parts allow a customised fitment of the track according to the type of installation: on the wall, glass partition or ceiling.

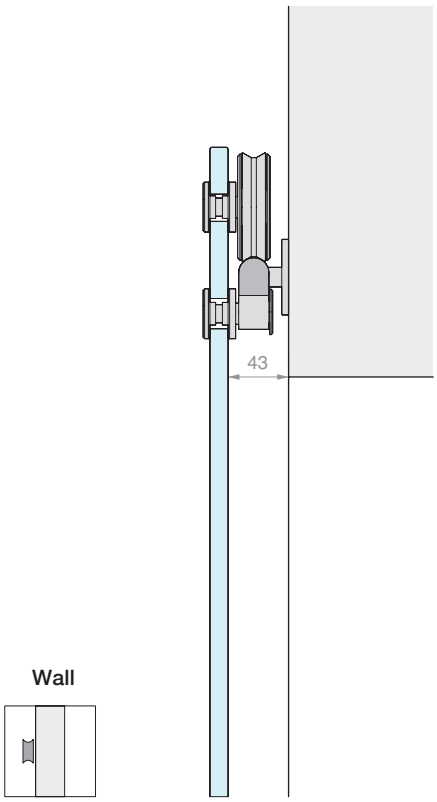

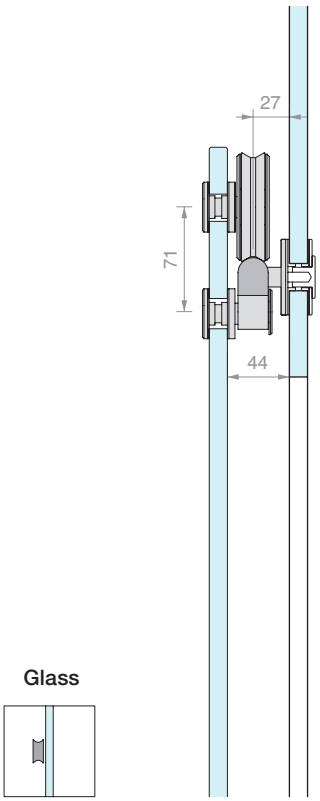

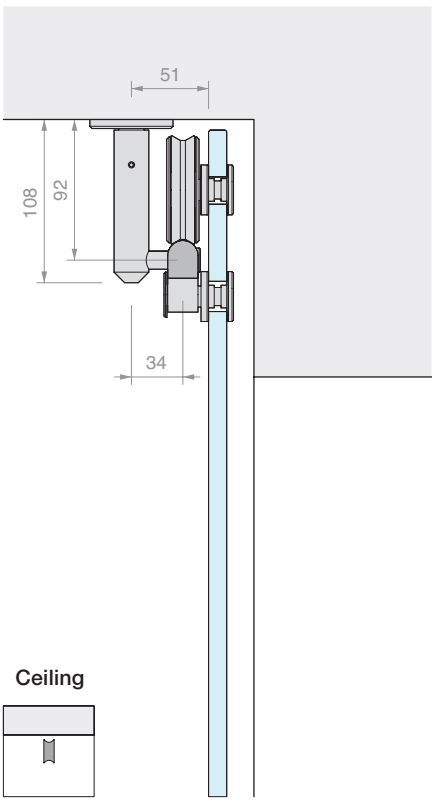

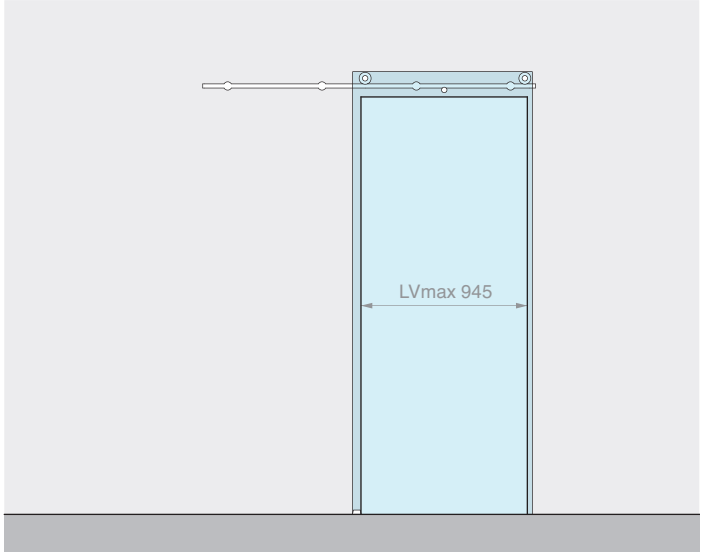

Kit comprising: Finish: /9

Art.	Description	Qty
GLM8500	Kit of 3 wheels	1 Pc
GLMBST200	Half round track L = 2000 mm	1 Pc
GLMATM	Wall fixing	4 Pcs
GLMFERM	End stop	2 Pcs
GLMGREG	Adjustable floor guide	1 Pc
Optional		
GLMSTOPSX	Left locking bracket	1 Pc
GLMSTOPDX	Right locking bracket	1 Pc
UT250	Pin wrench	1 Pc

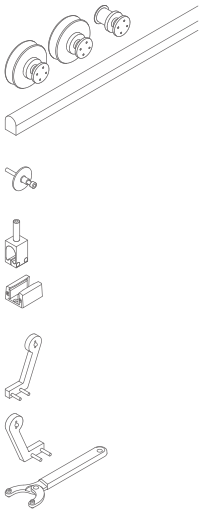

Art.	Description	For glass	Max. load	Qty
GM85002MUR	Wall fixing sliding door kit	From **12** to **17.5** mm	**150** kg	1 Pc

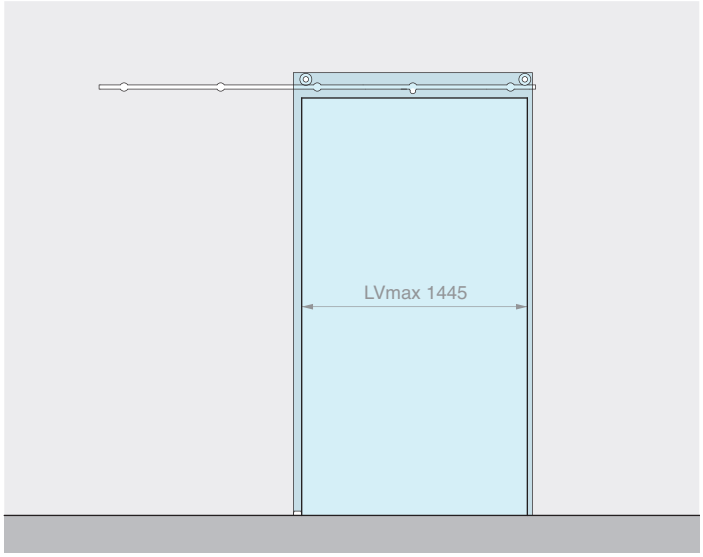

Kit comprising: Finish: /9

Art.	Description	Qty
GLM8500	Kit of 3 wheels	1 Pc
GLMBST300	Half round track L = 3000 mm	1 Pc
GLMATM	Wall fixing	5 Pcs
GLMFERM	End stop	2 Pcs
GLMGREG	Adjustable floor guide	1 Pc
Optional		
GLMSTOPSX	Left locking bracket	1 Pc
GLMSTOPDX	Right locking bracket	1 Pc
UT250	Pin wrench	1 Pc

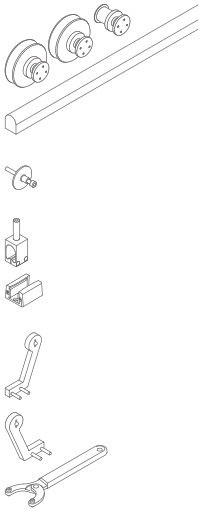

Art.	Description	For glass	Max. load	Qty
GM85003MUR	Wall fixing sliding door kit	From **12** to **17.5** mm	**150** kg	1 Pc

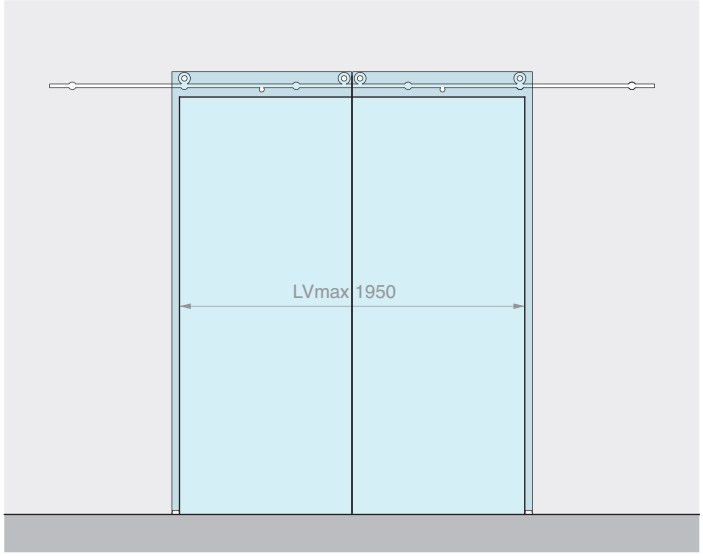

Kit comprising: Finish: /9

Art.	Description	Qty
GLM8500	Kit of 3 wheels	2 Pcs
GLMBST400	Half round track L = 4000 mm	1 Pc
GLMATM	Wall fixing	6 Pcs
GLMFERM	End stop	4 Pcs
GLMGREG	Adjustable floor guide	2 Pcs
Optional		
GLMSTOPSX	Left locking bracket	1 Pc
GLMSTOPDX	Right locking bracket	1 Pc
UT250	Pin wrench	1 Pc

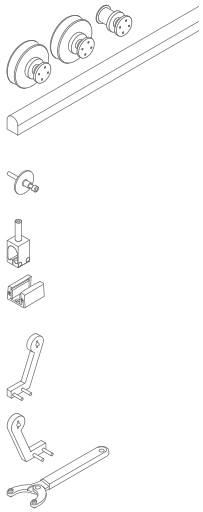

Art.	Description	For glass	Max. load	Qty
GM85004MUR	Wall fixing sliding door kit for 2 door panels	From **12** to **17.5** mm	**150** + **150** kg	1 Pc

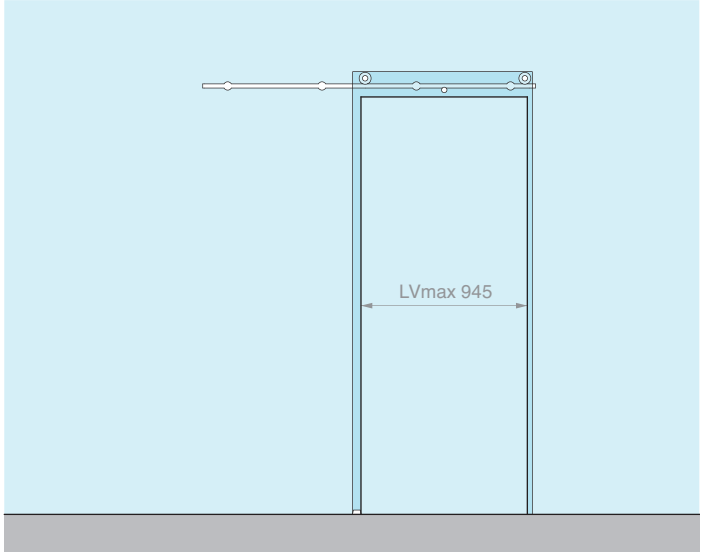

Kit comprising: Finish: /9

Art.	Description	Qty
GLM8500	Kit of 3 wheels	1 Pc
GLMBST200	Half round track L = 2000 mm	1 Pc
GLMATV	Glass fixing	4 Pcs
GLMFERM	End stop	2 Pcs
GLMGREG	Adjustable floor guide	1 Pc
Optional		
GLMSTOPSX	Left locking bracket	1 Pc
GLMSTOPDX	Right locking bracket	1 Pc
UT250	Pin wrench	1 Pc

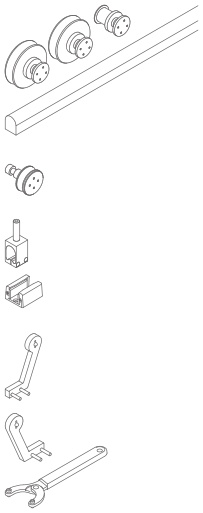

Art.	Description	For glass	Max. load	Qty
GM85002VET	Glass fixing sliding door kit	From **12** to **17.5** mm	**150** kg	1 Pc

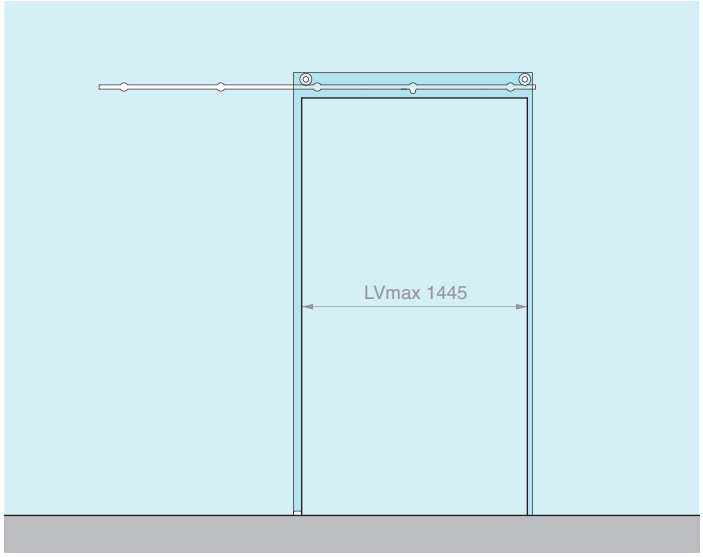

Kit comprising: Finish: /9

Art.	Description	Qty
GLM8500	Kit of 3 wheels	1 Pc
GLMBST300	Half round track L = 3000 mm	1 Pc
GLMATV	Glass fixing	5 Pcs
GLMFERM	End stop	2 Pcs
GLMGREG	Adjustable floor guide	1 Pc
Optional		
GLMSTOPSX	Left locking bracket	1 Pc
GLMSTOPDX	Right locking bracket	1 Pc
UT250	Pin wrench	1 Pc

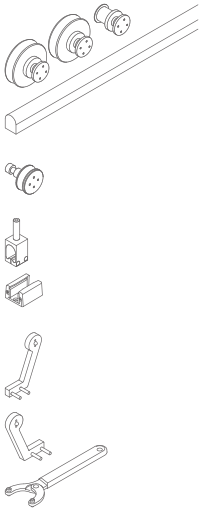

Art.	Description	For glass	Max. load	Qty
GM85003VET	Glass fixing sliding door kit	From **12** to **17.5** mm	**150** kg	1 Pc

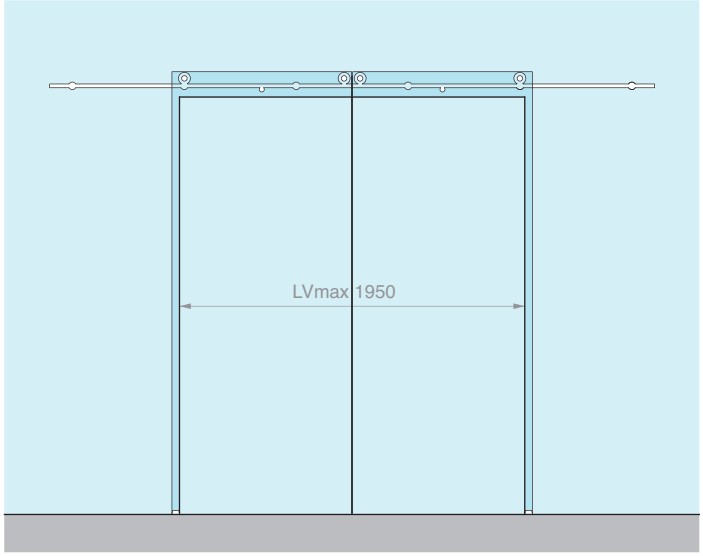

Kit comprising: Finish: /9

Art.	Description	Qty
GLM8500	Kit of 3 wheels	2 Pcs
GLMBST400	Half round track L = 4000 mm	1 Pc
GLMATV	Glass fixing	6 Pcs
GLMFERM	End stop	4 Pcs
GLMGREG	Adjustable floor guide	2 Pcs
Optional		
GLMSTOPSX	Left locking bracket	1 Pc
GLMSTOPDX	Right locking bracket	1 Pc
UT250	Pin wrench	1 Pc

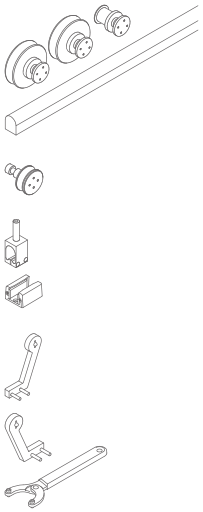

Art.	Description	For glass	Max. load	Qty
GM85004VET	Glass fixing sliding door kit for 2 door panels	From **12** to **17.5** mm	**150** + **150** kg	1 Pc

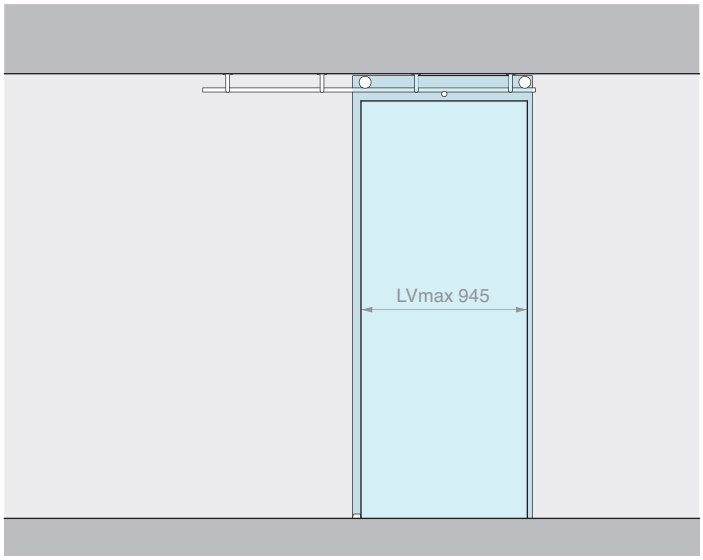

Kit comprising: Finish: /9

Art.	Description	Qty
GLM8500	Kit of 3 wheels	1 Pc
GLMBST200	Half round track L = 2000 mm	1 Pc
GLMATS	Ceiling fixing	4 Pcs
GLMFERM	End stop	2 Pcs
GLMGREG	Adjustable floor guide	1 Pc
Optional		
GLMSTOPSX	Left locking bracket	1 Pc
GLMSTOPDX	Right locking bracket	1 Pc
UT250	Pin wrench	1 Pc

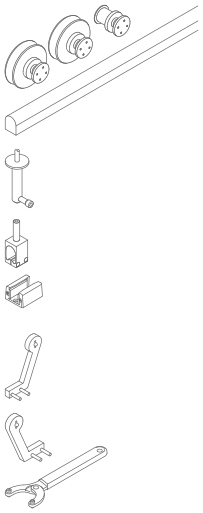

Art.	Description	For glass	Max. load	Qty
GM85002PLA	Ceiling fixing sliding door kit	From **12** to **17.5** mm	**150** kg	1 Pc

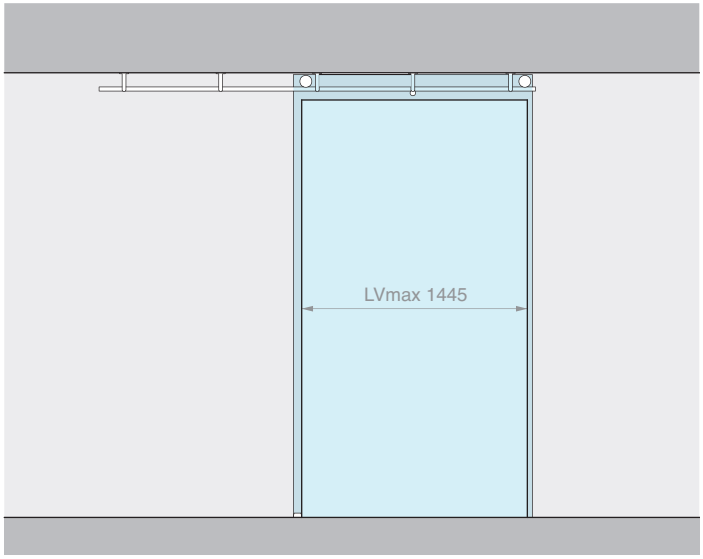

Kit comprising: Finish: /9

Art.	Description	Qty
GLM8500	Kit of 3 wheels	1 Pc
GLMBST300	Half round track L = 3000 mm	1 Pc
GLMATS	Ceiling fixing	5 Pcs
GLMFERM	End stop	2 Pcs
GLMGREG	Adjustable floor guide	1 Pc
Optional		
GLMSTOPSX	Left locking bracket	1 Pc
GLMSTOPDX	Right locking bracket	1 Pc
UT250	Pin wrench	1 Pc

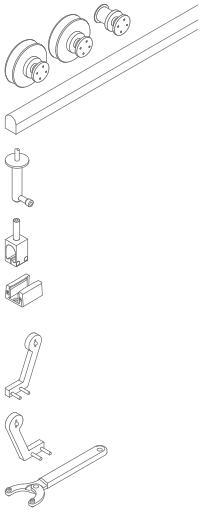

Art.	Description	For glass	Max. load	Qty
GM85003PLA	Ceiling fixing sliding door kit	From **12** to **17.5** mm	**150** kg	1 Pc

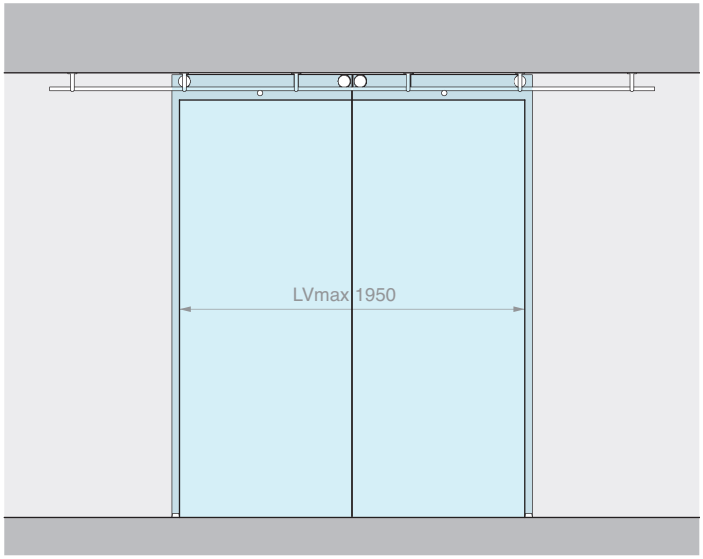

Kit comprising: Finish: /9

Art.	Description	Qty
GLM8500	Kit of 3 wheels	2 Pcs
GLMBST400	Half round track L = 4000 mm	1 Pc
GLMATS	Ceiling fixing	6 Pcs
GLMFERM	End stop	4 Pcs
GLMGREG	Adjustable floor guide	2 Pcs
Optional		
GLMSTOPSX	Left locking bracket	1 Pc
GLMSTOPDX	Right locking bracket	1 Pc
UT250	Pin wrench	1 Pc

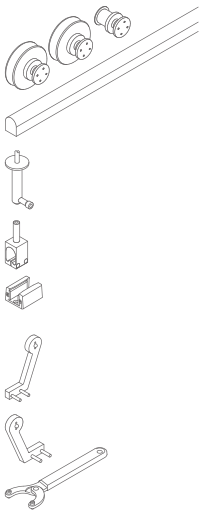

Art.	Description	For glass	Max. load	Qty
GM85004PLA	Ceiling fixing sliding door kit for 2 door panels	From **12** to **17.5** mm	**150** + **150** kg	1 Pc

WHEELS

Material: AISI 304 stainless steel
Recommended holes size GLMRC Ø18 mm
Recommended holes size GLMRL Ø20 mm
Recommended tool for tightening Art. UT250

Finish: /9

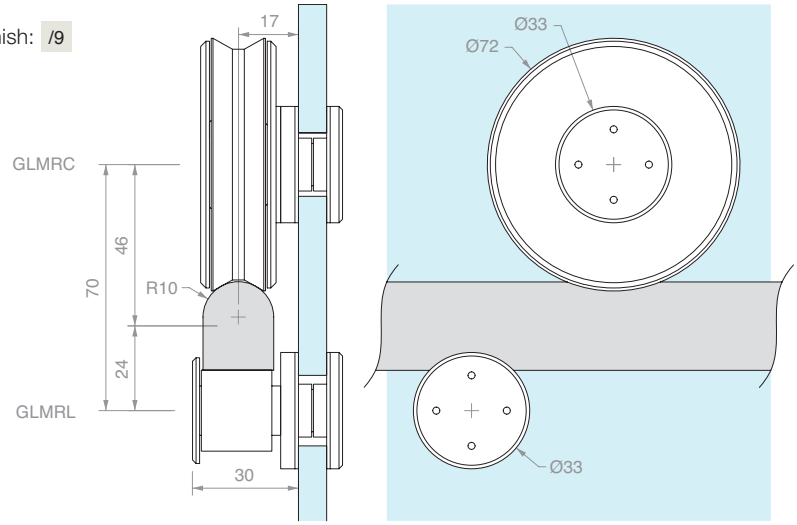

Art.	Description	For glass thickness	Qty.
GLMRC	Sliding wheel	From **12** to **17.5** mm	1 Pc
GLMRL	Anti-derailment wheel	From **12** to **17.5** mm	1 Pc
GLM8500	Kit of 2 sliding rollers + 1 anti-derailment roller	From **12** to **17.5** mm	1 Pc

SOLID HALF ROUND DRILLED TRACK

Material: AISI 304 stainless steel
Finish: /8
Note: The 4m rail consist of 2 rails of 2m spliced together.

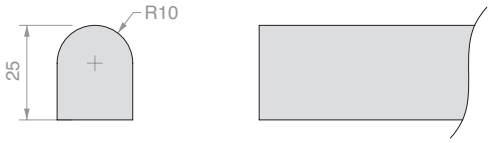

Track drilling pattern:

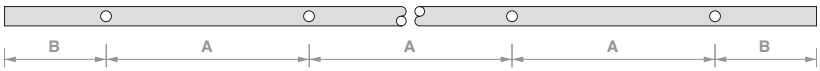

Art.	Length	No. holes	Dimensions		Qty
GLMBST200	**2000** mm	**4**	A **567** mm	B **150** mm	1 Pc
GLMBST300	**3000** mm	**5**	A **675** mm	B **150** mm	1 Pc
GLMBST400	**4000** mm	**6**	A **740** mm	B **150** mm	1 Pc
GLMBST	**cut to size**	**on request**	**cut to size**		1 Pc

WALL FIXING

Material: AISI 304 stainless steel
Finish: /9

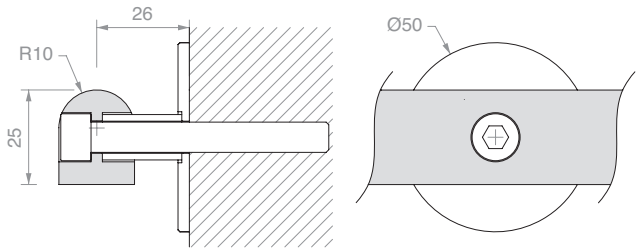

Art.	Description	Qty
GLMATM	With **M8** mm x **80** mm screws	1 Pc

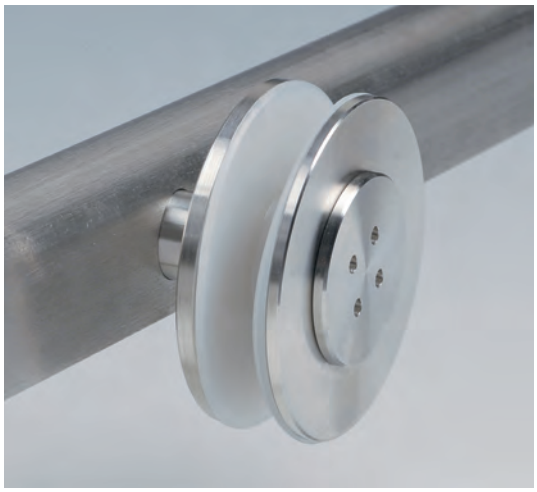

GLASS FIXING

Material: AISI 304 stainless steel
Recommended hole size Ø20 mm
Recommended tool for tightening Art. UT250
Finish: /9

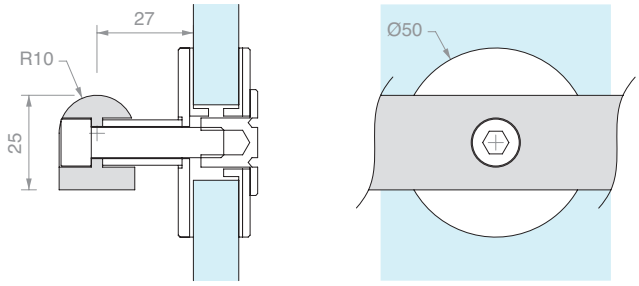

Art.	Description	For glass	Qty
GLMATV	With **M8** mm x **45** mm screws	From **12** to **17.5** mm	1 Pc

CEILING FIXING

Material: AISI 304 stainless steel
Finish: /9

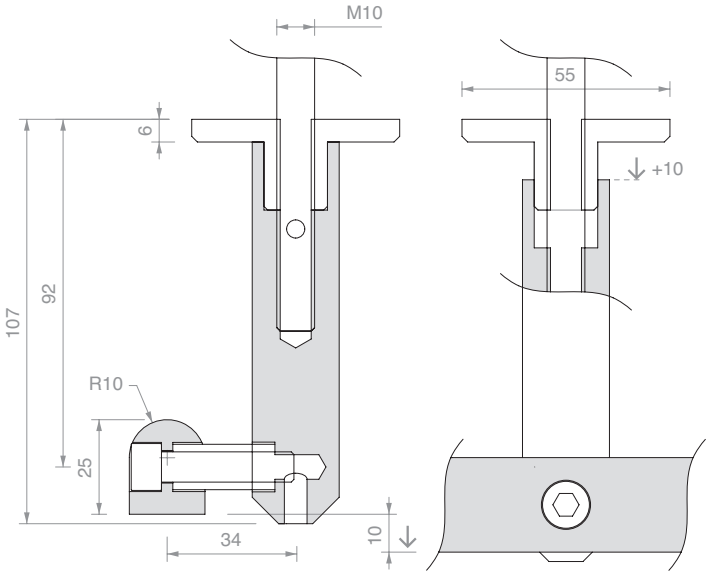

Art.	Description	Qty
GLMATS	With **M10** mm x **160** mm screws	1 Pc

END STOP

Material: AISI 304 stainless steel
Finish: /8

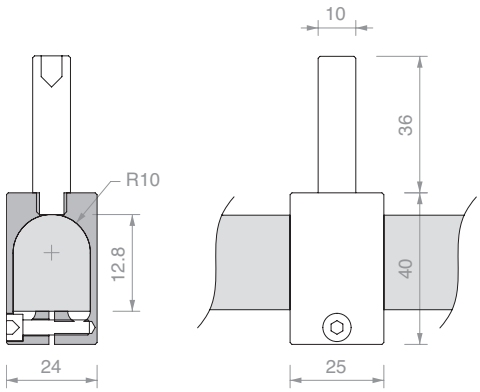

Art.	Qty
GLMFERM	1 Pc

LEFT LOCKING BRACKET

Material: AISI 304 stainless steel

Finish: /8

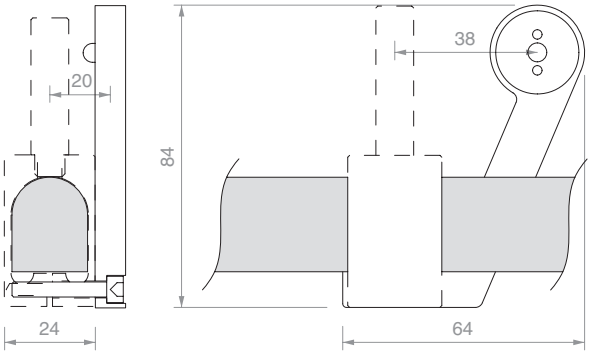

Art.	Qty
GLMSTOPSX	1 Pc

RIGHT LOCKING BRACKET

Material: AISI 304 stainless steel

Finish: /8

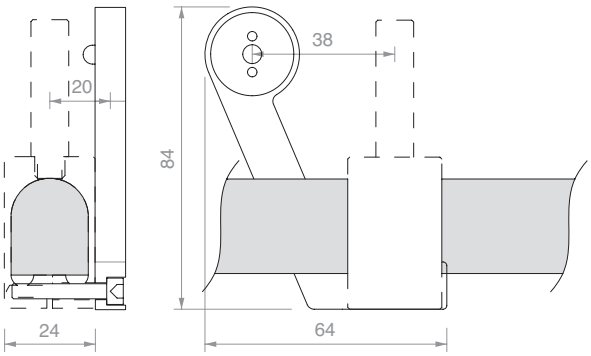

Art.	Qty
GLMSTOPDX	1 Pc

ADJUSTABLE FLOOR GUIDE

Material: aluminium

Finish: /88

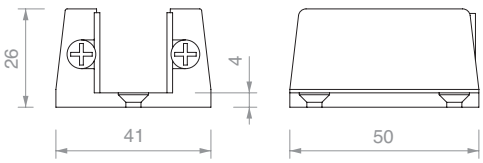

Art.	For glass	Qty
GLMGREG	From **11** to **19** mm	1 Pc

PIN WRENCH

Material: iron body, steel pins

The compass opening allows to operate with wide radiuses,
for pair of holes with a centre distance between 9 mm and 55 mm

Art.	Description	Qty
UT250	Pin wrench with Ø2.4 mm pins	1 Pc
UTC250R	2 replacements pins Ø2.4 mm	1 Pc

TRACK FIXING

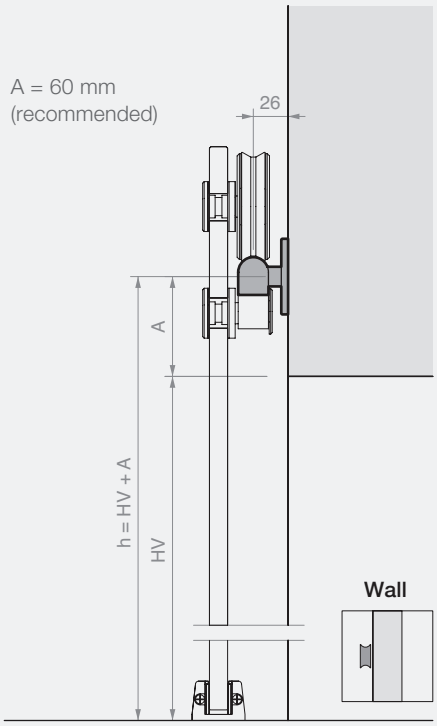

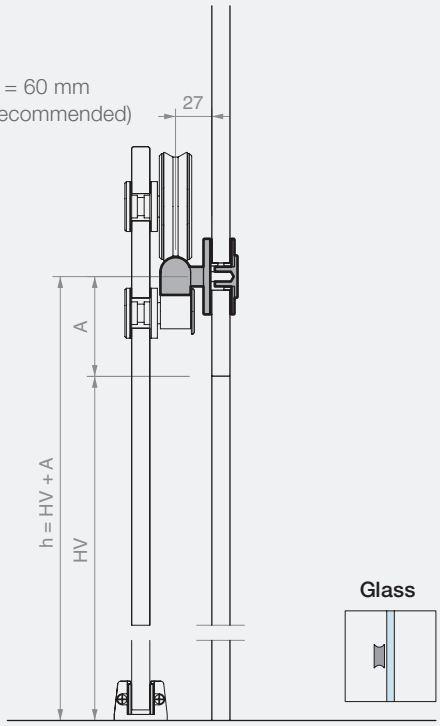

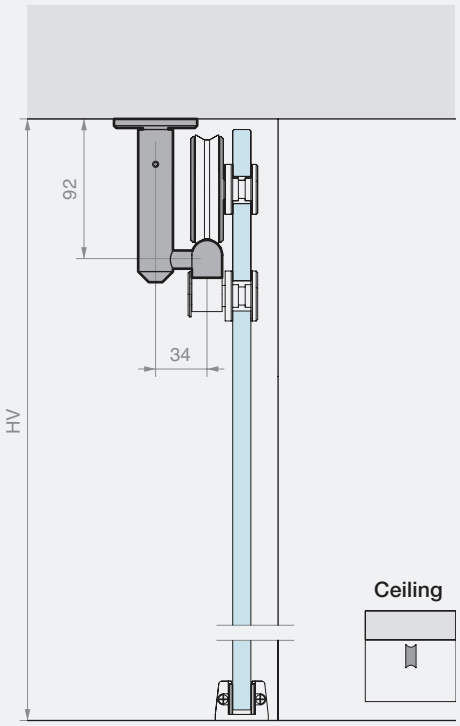

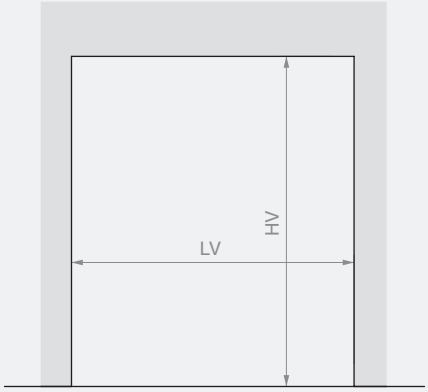

Track L = 2000 mm
LVmax 945 mm

Track L = 3000 mm
LVmax 1445 mm

Track L = 4000 mm
LVmax 1950 mm

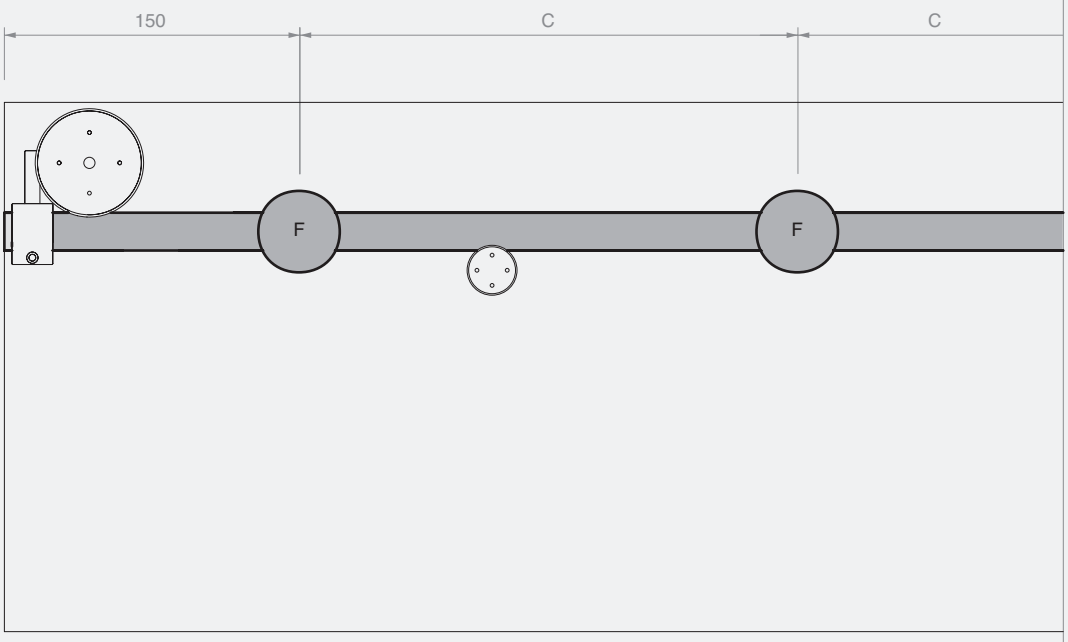

Track L = 2000 mm
4 fixings (F)
C = 567 mm

Track L = 3000 mm
5 fixings (F)
C = 675 mm

Track L = 4000 mm
6 fixings (F)
C = 740 mm

CALCULATION OF DIMENSIONS AND DRILLING OF GLASS PANELS

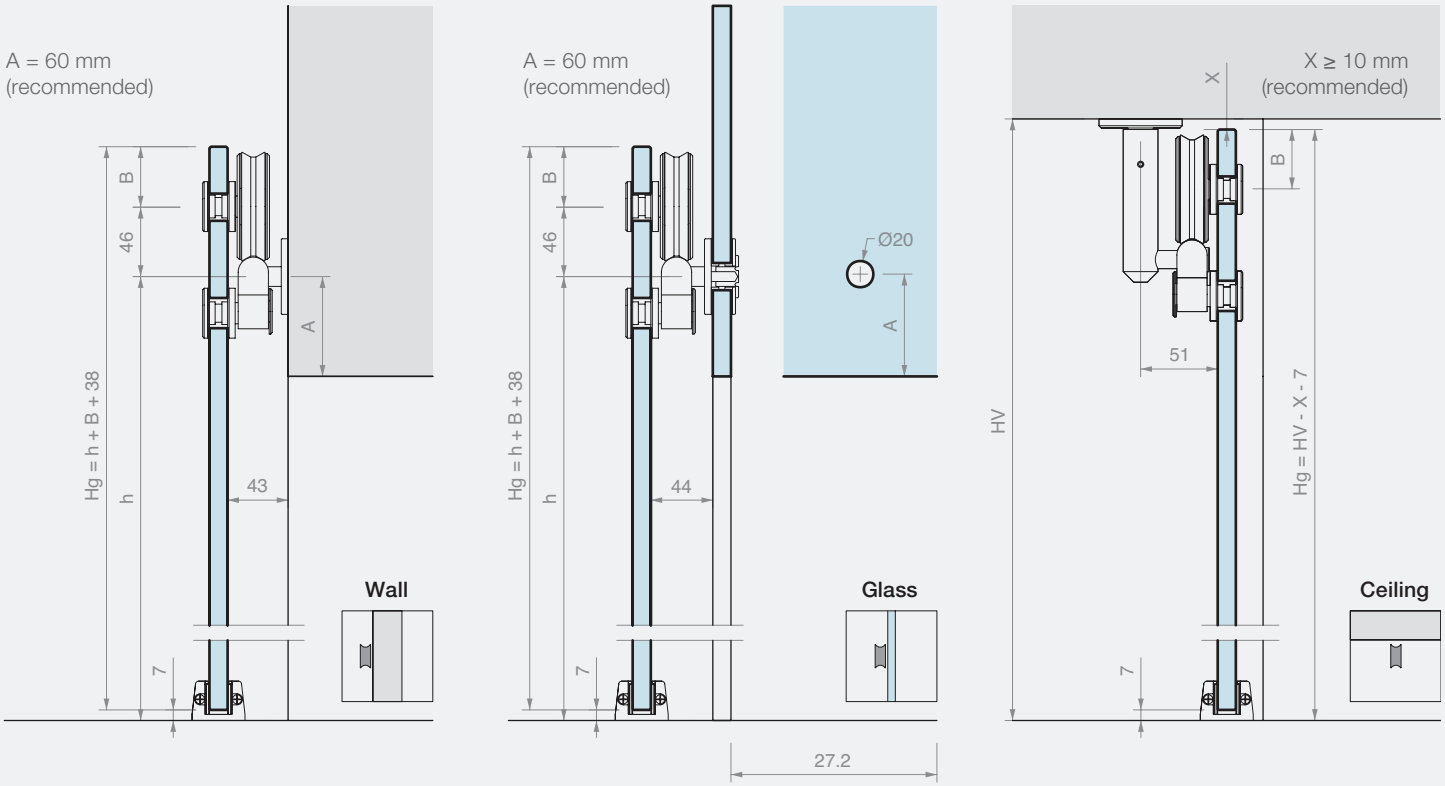

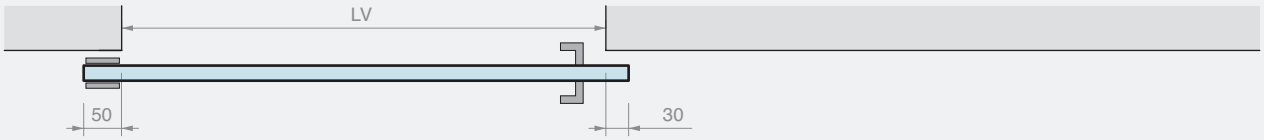

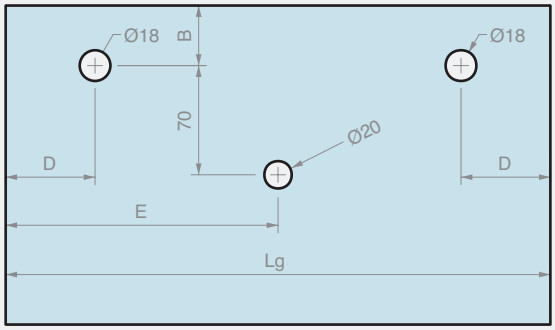

Lg = LV + 80
D ≥ 95 mm
E = Lg/2

WALL/GLASS FIXING
B ≥ 40 mm (recommended)

CEILING FIXING
B = 47 mm - X

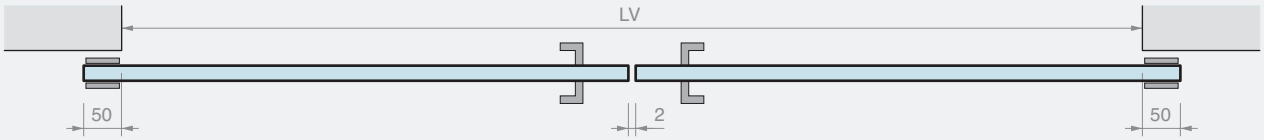

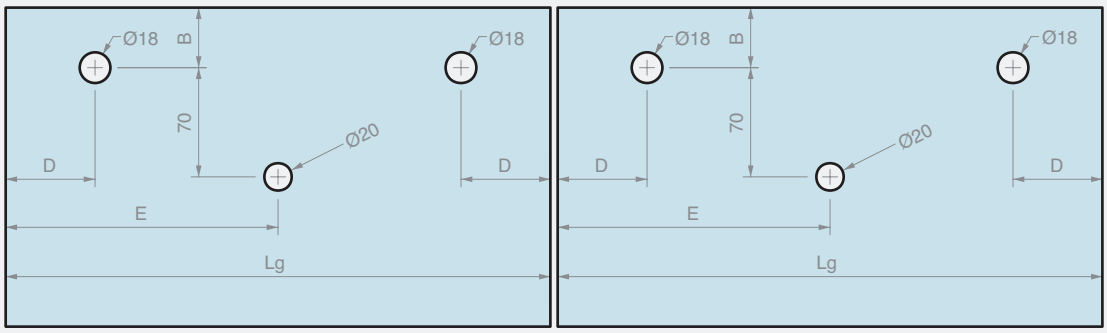

Lg = (LV + 98)/2
D ≥ 95 mm
E = Lg/2

FIXING
WALL/GLASS
B ≥ 40 mm (recommended)

FIXING
CEILING
B = 47 mm - X

GIUMAX 6500

AISI 304 stainless steel sliding door system composed of a half-round load-bearing track, visible rollers and fixing accessories.

The roller is composed of a T-shaped connecting load-bearing bracket, with a pair of wheels, an anti-derailment wheel and two studs for fixing the door panel. The pair of rollers allows a thick door panel between 12 and 17.5 mm and weighing up to 150 kg to slide.

The roller technology allows the height of the studs to be adjusted to ease the position of the door panel.

The fixing parts allow a frontal fitment of the track according to the type of installation: on the wall or glass partition.

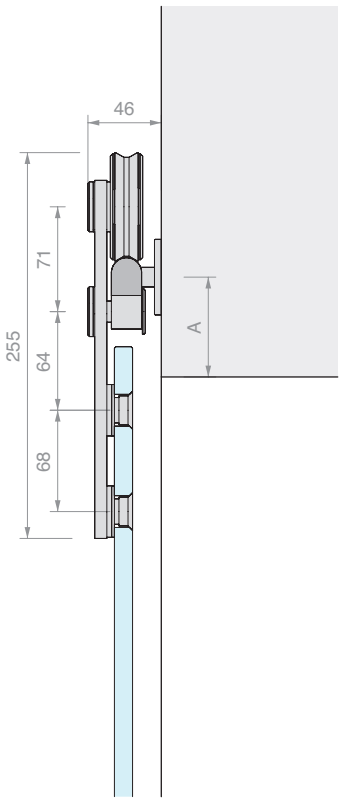

Wall

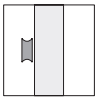

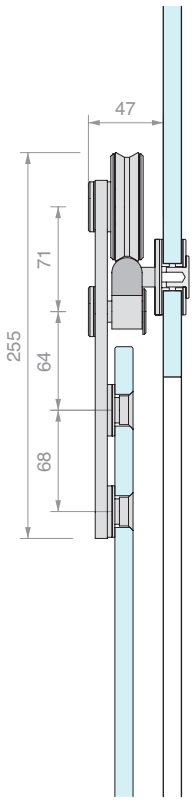

Glass

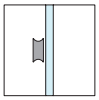

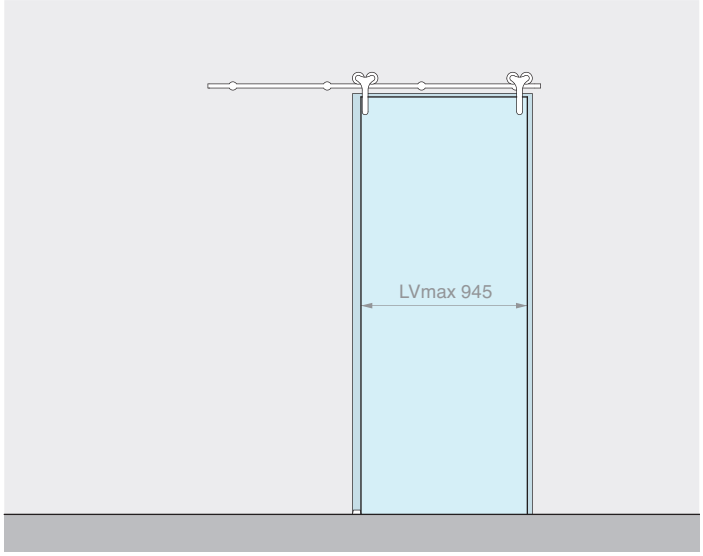

Kit comprising: Finish: /9

Art.	Description	Qty
GLM6500	Kit of 2 rollers	1 Pc
GLMBST200	Half round track L = 2000 mm	1 Pc
GLMATM	Wall fixing	4 Pcs
GLMFERM	End stop	2 Pcs
GLMGREG	Adjustable floor guide	1 Pc
Optional		
GLMSTOPSX	Left locking bracket	1 Pc
GLMSTOPDX	Right locking bracket	1 Pc
UT250	Pin wrench	1 Pc

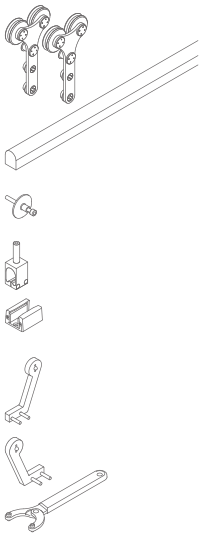

Art.	Description	For glass	Max. load	Qty
GM65002MUR	Wall fixing sliding door kit	From **12** to **17.5** mm	**150** kg	1 Pc

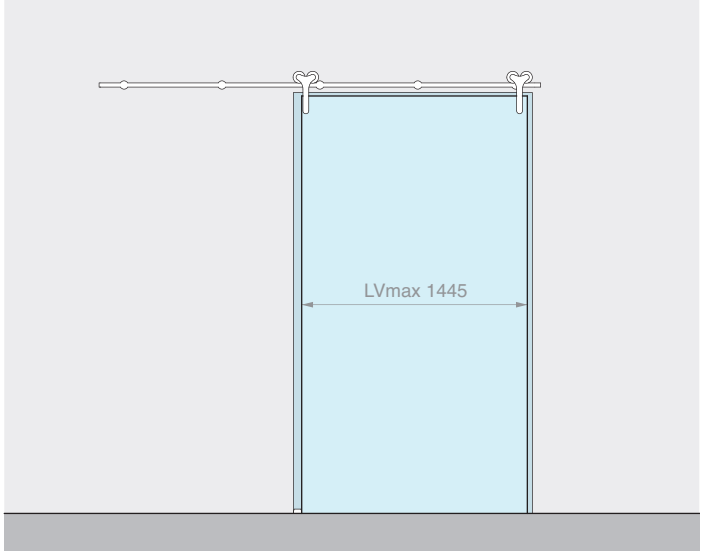

Kit comprising: Finish: /9

Art.	Description	Qty
GLM6500	Kit of 2 rollers	1 Pc
GLMBST300	Half round track L = 3000 mm	1 Pc
GLMATM	Wall fixing	5 Pcs
GLMFERM	End stop	2 Pcs
GLMGREG	Adjustable floor guide	1 Pc
Optional		
GLMSTOPSX	Left locking bracket	1 Pc
GLMSTOPDX	Right locking bracket	1 Pc
UT250	Pin wrench	1 Pc

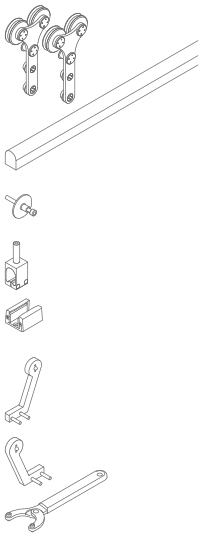

Art.	Description	For glass	Max. load	Qty
GM65003MUR	Wall fixing sliding door kit	From **12** to **17.5** mm	**150** kg	1 Pc

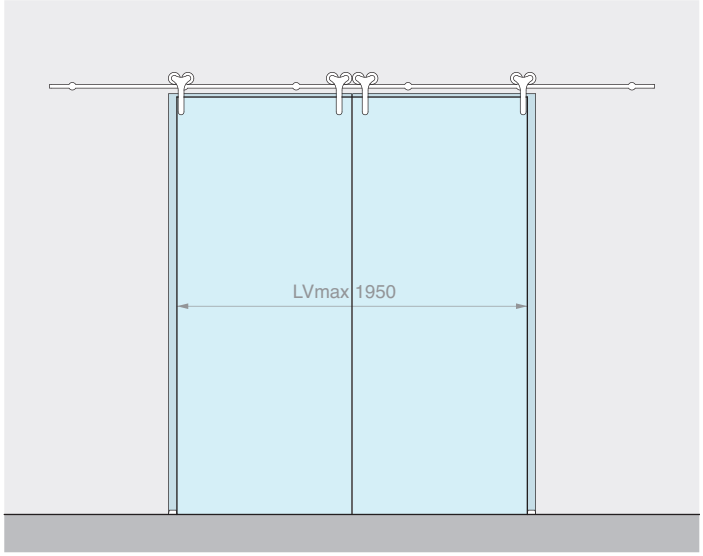

Kit comprising: Finish: /9

Art.	Description	Qty
GLM6500	Kit of 2 rollers	2 Pcs
GLMBST400	Half round track L = 4000 mm	1 Pc
GLMATM	Wall fixing	6 Pcs
GLMFERM	End stop	4 Pcs
GLMGREG	Adjustable floor guide	2 Pcs
Optional		
GLMSTOPSX	Left locking bracket	1 Pc
GLMSTOPDX	Right locking bracket	1 Pc
UT250	Pin wrench	1 Pc

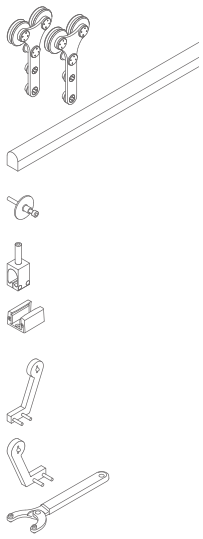

Art.	Description	For glass	Max. load	Qty
GM65004MUR	Wall fixing sliding door kit for 2 door panels	From **12** to **17.5** mm	**150** + **150** kg	1 Pc

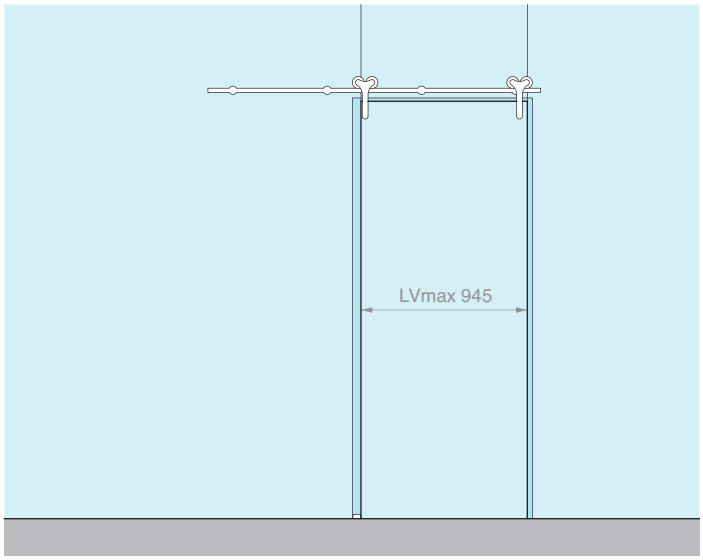

Kit comprising: Finish: /9

Art.	Description	Qty
GLM6500	Kit of 2 rollers	1 Pc
GLMBST200	Half round track L = 2000 mm	1 Pc
GLMATV	Glass fixing	4 Pcs
GLMFERM	End stop	2 Pcs
GLMGREG	Adjustable floor guide	1 Pc
Optional		
GLMSTOPSX	Left locking bracket	1 Pc
GLMSTOPDX	Right locking bracket	1 Pc
UT250	Pin wrench	1 Pc

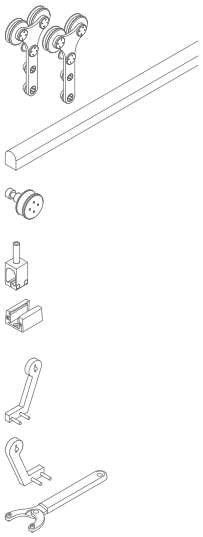

Art.	Description	For glass	Max. load	Qty
GM65002VET	Glass fixing sliding door kit	From **12** to **17.5** mm	**150** kg	1 Pc

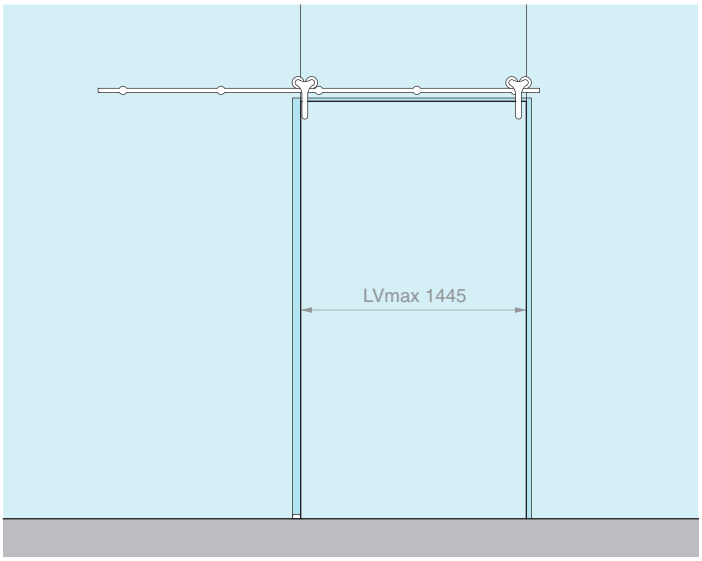

Kit comprising: Finish: /9

Art.	Description	Qty
GLM6500	Kit of 2 rollers	1 Pc
GLMBST300	Half round track L = 3000 mm	1 Pc
GLMATV	Glass fixing	5 Pcs
GLMFERM	End stop	2 Pcs
GLMGREG	Adjustable floor guide	1 Pc
Optional		
GLMSTOPSX	Left locking bracket	1 Pc
GLMSTOPDX	Right locking bracket	1 Pc
UT250	Pin wrench	1 Pc

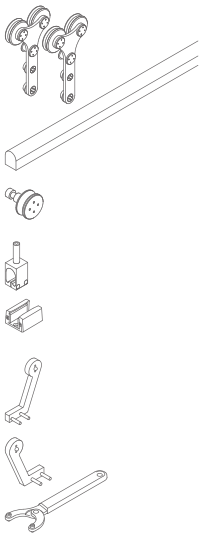

Art.	Description	For glass	Max. load	Qty
GM65003VET	Glass fixing sliding door kit	From **12** to **17.5** mm	**150** kg	1 Pc

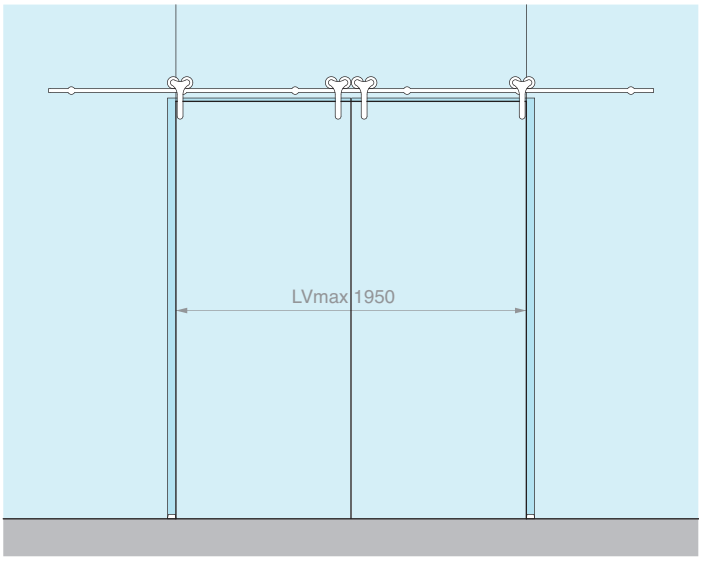

Kit comprising: Finish: /9

Art.	Description	Qty
GLM6500	Kit of 2 rollers	2 Pcs
GLMBST400	Half round track L = 4000 mm	1 Pc
GLMATV	Glass fixing	6 Pcs
GLMFERM	End stop	4 Pcs
GLMGREG	Adjustable floor guide	2 Pcs
Optional		
GLMSTOPSX	Left locking bracket	1 Pc
GLMSTOPDX	Right locking bracket	1 Pc
UT250	Pin wrench	1 Pc

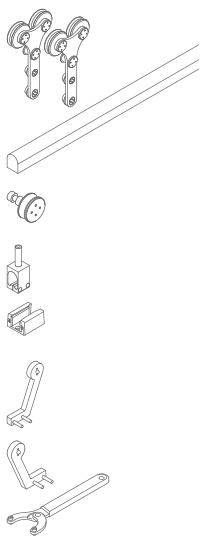

Art.	Description	For glass	Max. load	Qty
GM65004VET	Glass fixing sliding door kit for 2 door panels	From **12** to **17.5** mm	**150** + **150** kg	1 Pc

ROLLER

Material: AISI 304 stainless steel
Recommended holes size Ø21 mm, countersunk 2 mm depth
Recommended tool for tightening Art. UT250
Finish: /9

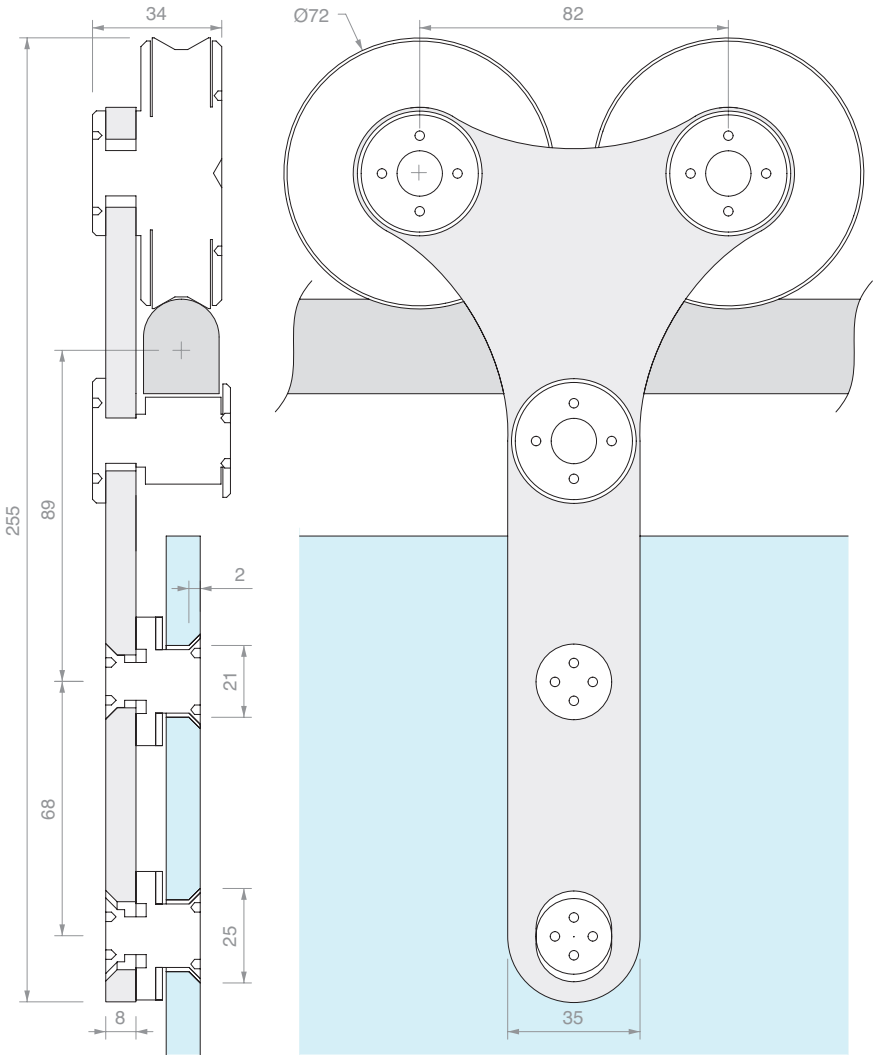

Art.	Description	For glass thickness	Qty.
GLM6550	Single roller	From **12** to **17.5** mm	1 Pc
GLM6500	Kit of 2 rollers	From **12** to **17.5** mm	1 Pc

SOLID HALF ROUND DRILLED TRACK

Material: AISI 304 stainless steel
Finish: /8
Note: The 4m rail consist of 2 rails of 2m spliced together.

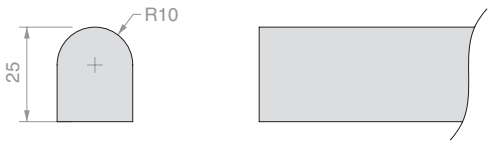

Track drilling pattern:

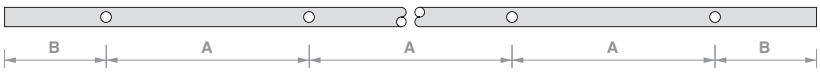

Art.	Length	No. holes	Dimensions		Qty
GLMBST200	**2000** mm	**4**	A **567** mm	B **150** mm	1 Pc
GLMBST300	**3000** mm	**5**	A **675** mm	B **150** mm	1 Pc
GLMBST400	**4000** mm	**6**	A **740** mm	B **150** mm	1 Pc
GLMBST	**cut to size**	**on request**	**cut to size**		1 Pc

WALL FIXING

Material: AISI 304 stainless steel

Finish: /9

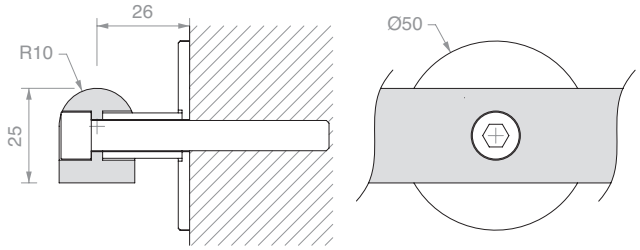

Art.	Description	Qty
GLMATM	With **M8** mm x **80** mm screws	1 Pc

GLASS FIXING

Material: AISI 304 stainless steel

Recommended hole size Ø20 mm

Recommended tool for tightening Art. UT250

Finish: /9

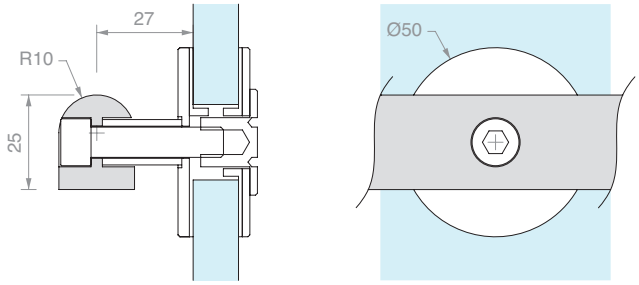

Art.	Description	For glass	Qty
GLMATV	With **M8** mm x **45** mm screws	From **12** to **17.5** mm	1 Pc

END STOP

Material: AISI 304 stainless steel

Finish: /8

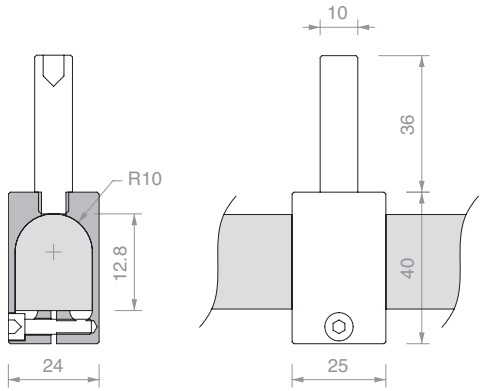

Art.	Qty
GLMFERM	1 Pc

LEFT LOCKING BRACKET

Material: AISI 304 stainless steel

Finish: /8

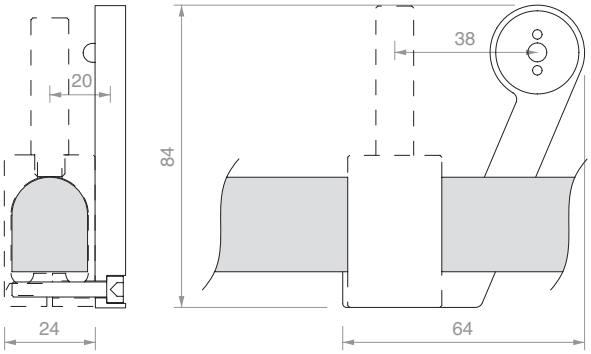

Art.	Qty
GLMSTOPSX	1 Pc

RIGHT LOCKING BRACKET

Material: AISI 304 stainless steel

Finish: /8

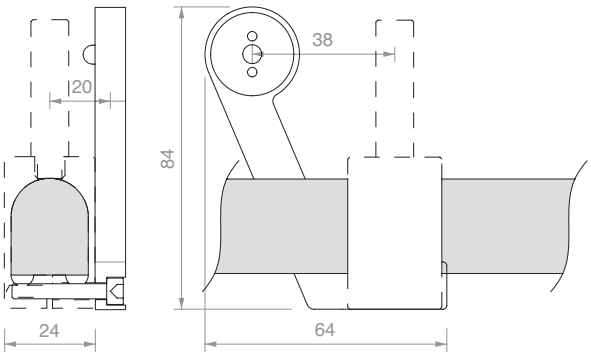

Art.	Qty
GLMSTOPDX	1 Pc

ADJUSTABLE FLOOR GUIDE

Material: aluminium

Finish: /88

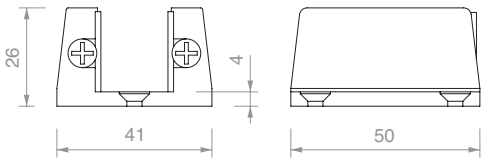

Art.	For glass	Qty
GLMGREG	From **11** to **19** mm	1 Pc

PIN WRENCH

Material: iron body, steel pins

The compass opening allows to operate with wide radiuses,
for pair of holes with a centre distance between 9 mm and 55 mm

Art.	Description	Qty
UT250	Pin wrench with Ø2.4 mm pins	1 Pc
UTC250R	2 replacements pins Ø2.4 mm	1 Pc

TRACK FIXING

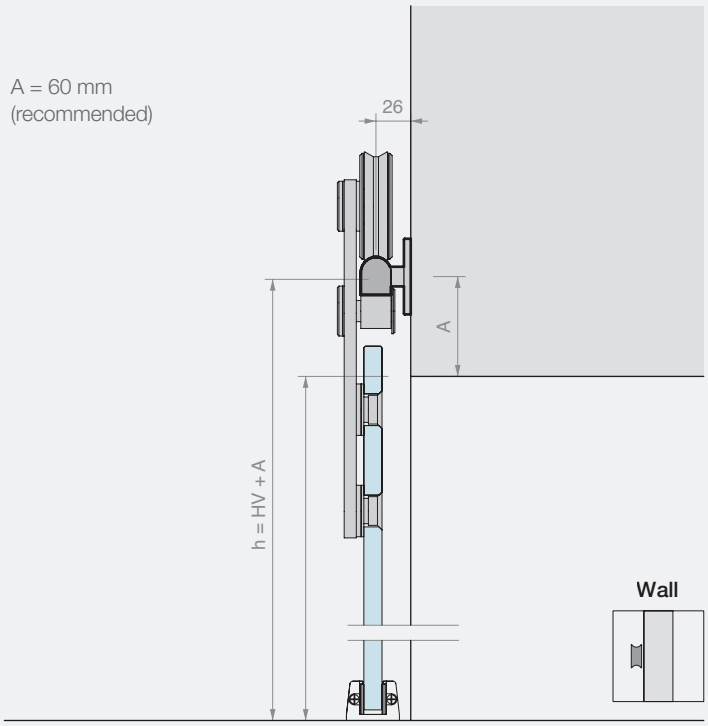

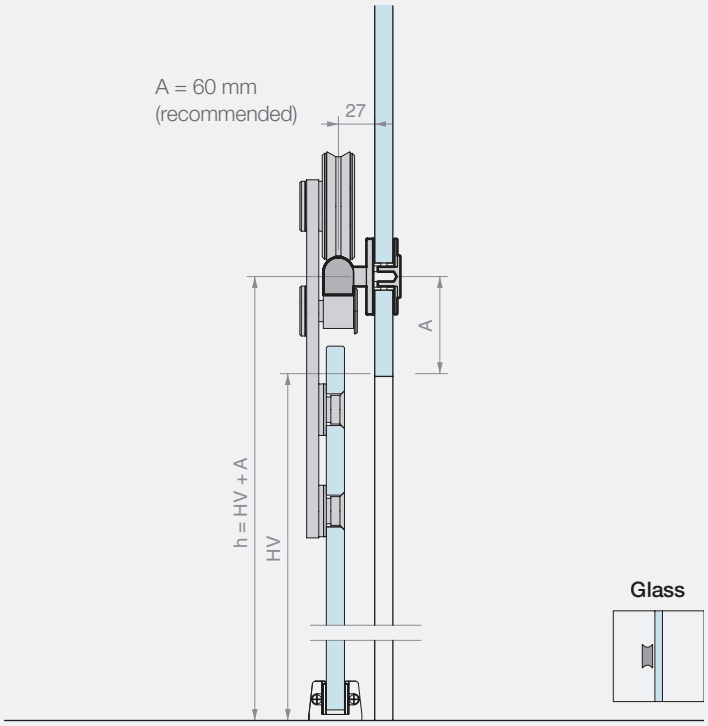

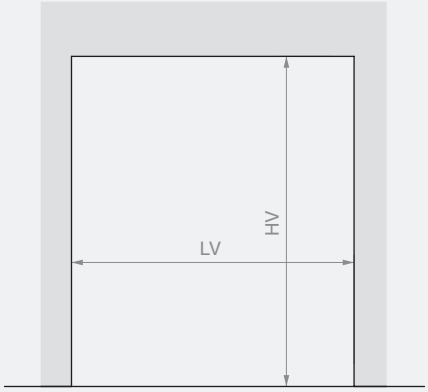

Track L = 2000 mm
LVmax 945 mm

Track L = 3000 mm
LVmax 1445 mm

Track L = 4000 mm
LVmax 1950 mm

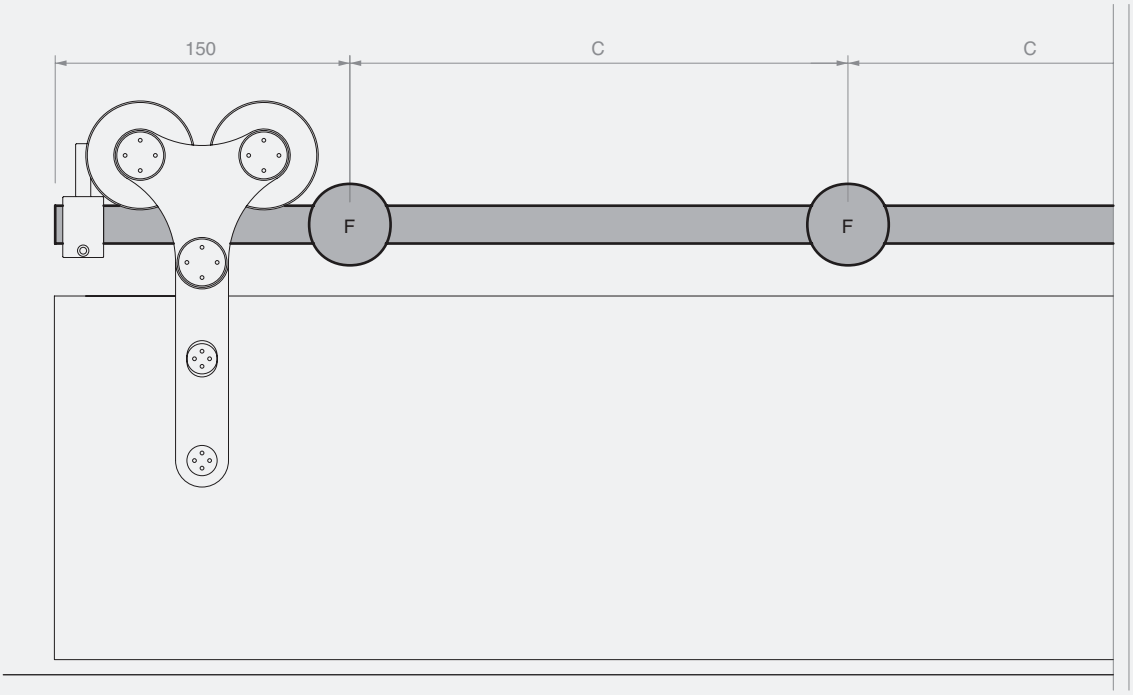

Track L = 2000 mm
4 fixings (F)
C = 567 mm

Track L = 3000 mm
5 fixings (F)
C = 675 mm

Track L = 4000 mm
6 fixings (F)
C = 740 mm

CALCULATION OF DIMENSIONS AND DRILLING OF GLASS PANELS

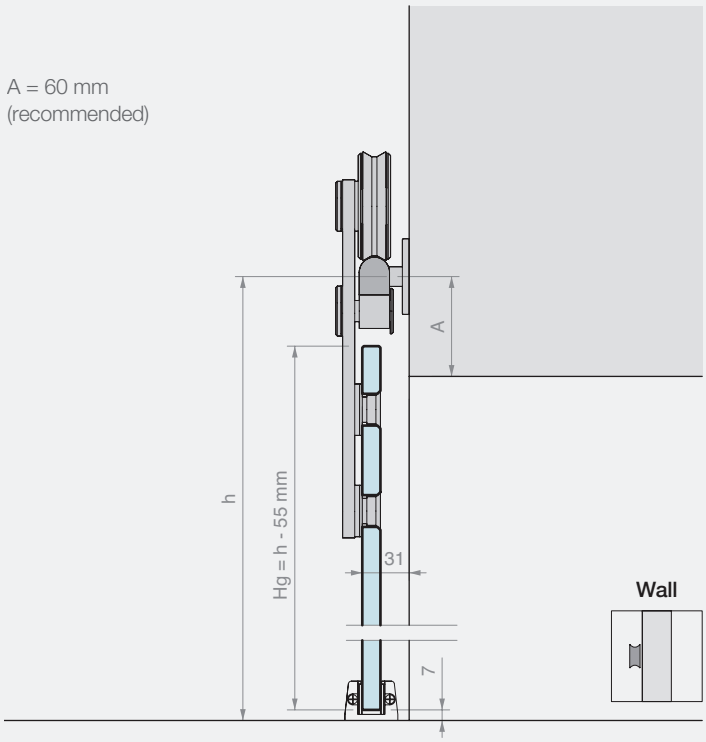

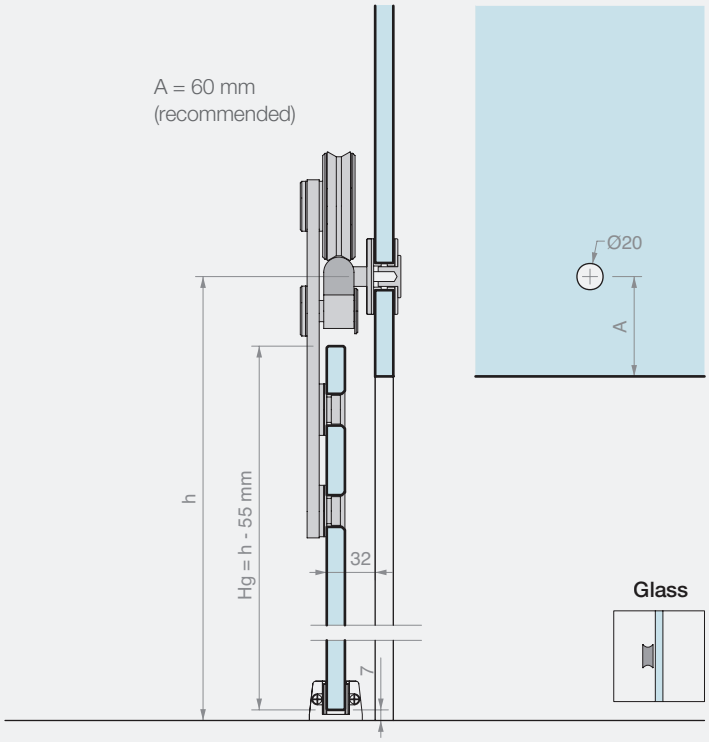

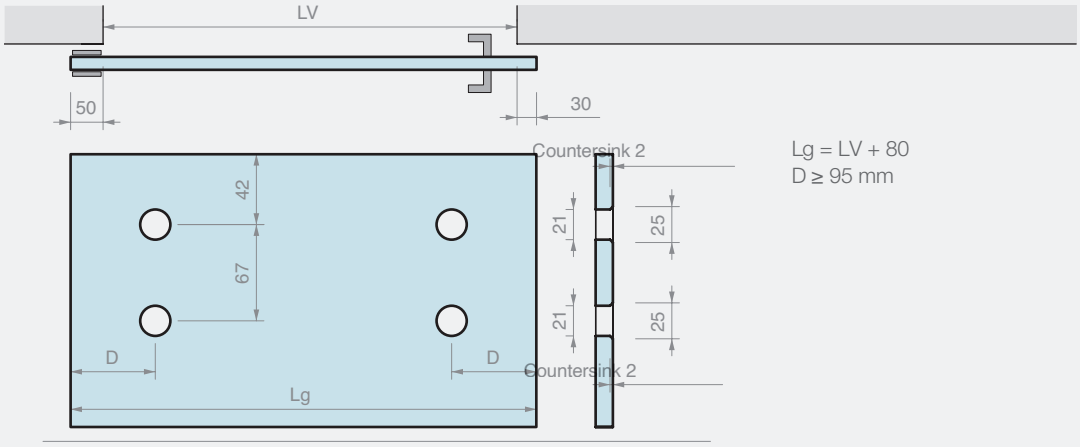

Lg = LV + 80
D ≥ 95 mm

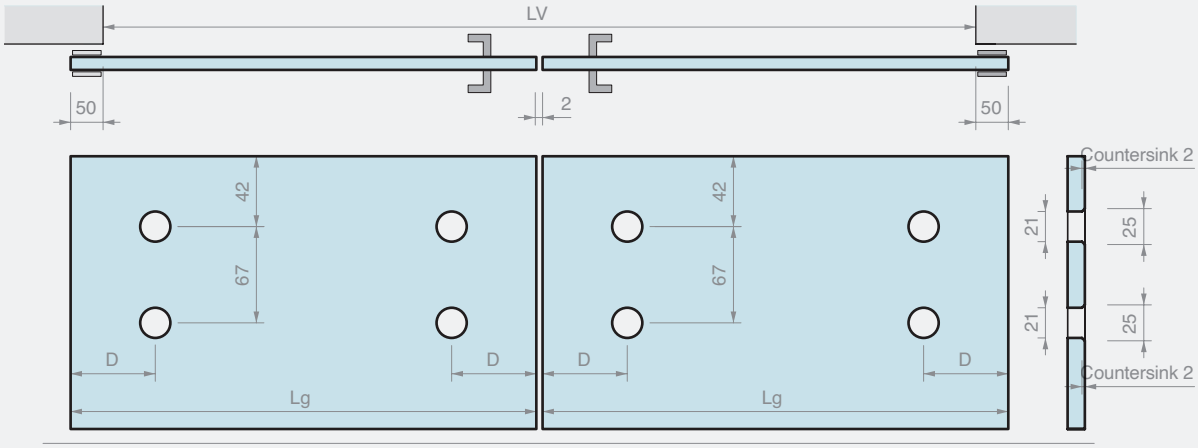

Lg = (LV + 98) / 2
D ≥ 95 mm

GIUMAX 3500

AISI 304 stainless steel sliding door system composed of a solid round track, visible rollers and fixing accessories.

The roller is composed of a connector bracket, a wheel and an anti-derailment pin. The connection bracket has holes for fixing the panel. The couple of wheels allows a sliding of a door panel with a minimum frame thickness of 30 mm to, with a maximum weight up to 80 kg.

The roller technology allows the height of the wheel to be adjusted to ease the position of the door panel. The fixing parts allow the track to be fitted to the wall.

Wall

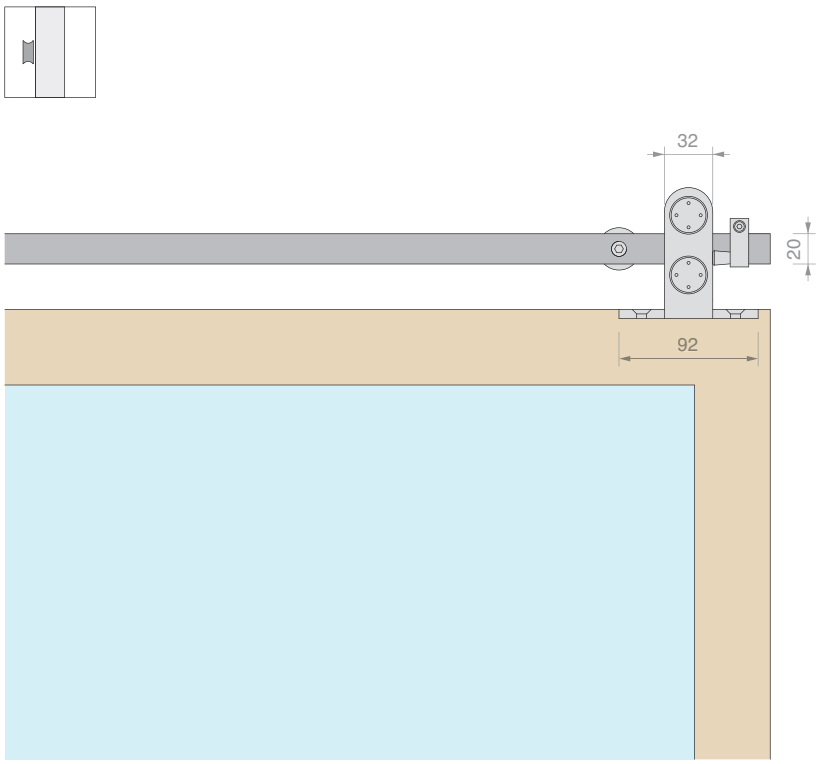

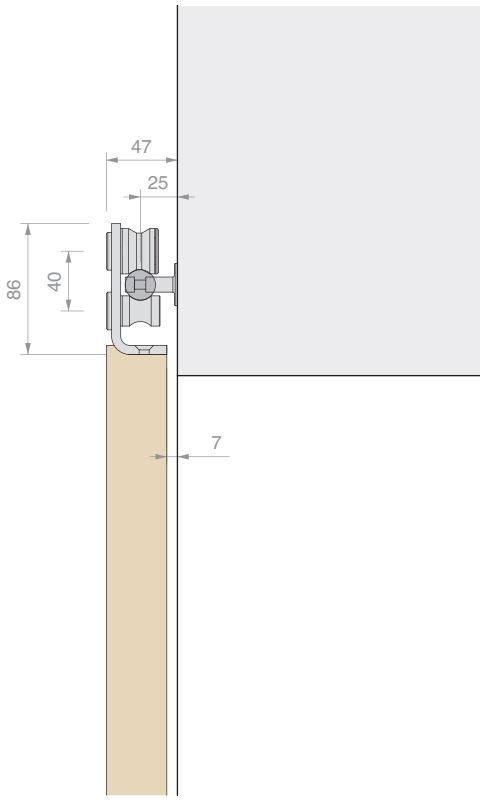

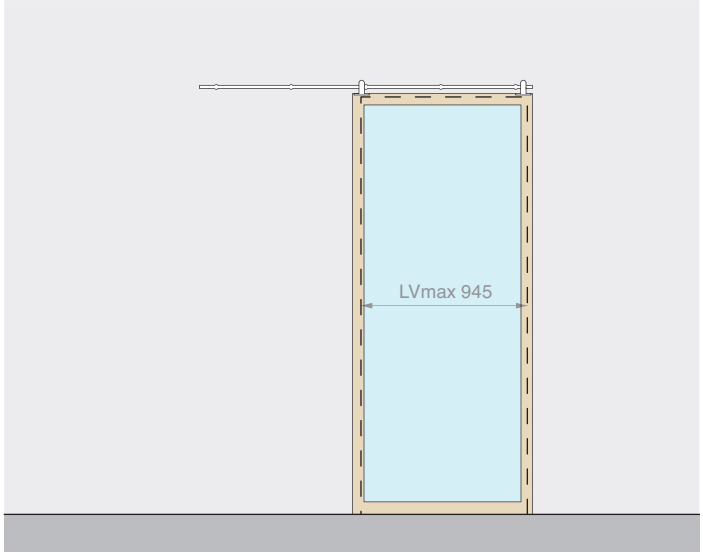

Kit comprising: Finish: /8

Art.	Description	Qty
GNW3500	Kit of 2 rollers	1 Pc
GLMTND20	Round track L = 2000 mm	1 Pc
GNW20	Wall fixing	5 Pcs
GLM3023	Oval end stop	2 Pcs
057.3010.001	Floor guide	1 Pc
Optional		
UT200	Pin wrench	1 Pc

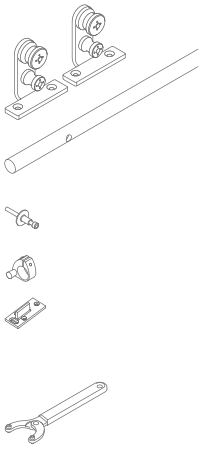

Art.	Description	For door panels	Max. load	Qty
GNW35002	Wall fixing sliding door kit	≥ **30** mm	**80** kg	1 Pc

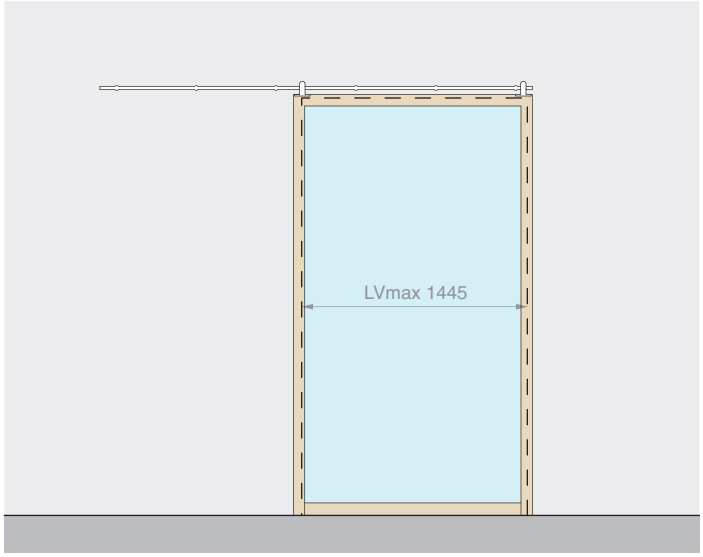

Kit comprising: Finish: /8

Art.	Description	Qty
GNW3500	Kit of 2 rollers	1 Pc
GLMTND30	Round track L = 3000 mm	1 Pc
GNW20	Wall fixing	6 Pcs
GLM3023	Oval end stop	2 Pcs
057.3010.001	Floor guide	1 Pc
Optional		
UT200	Pin wrench	1 Pc

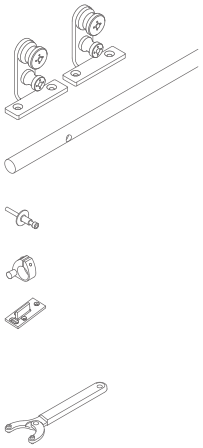

Art.	Description	For door panels	Max. load	Qty
GNW35003	Wall fixing sliding door kit	≥ **30** mm	**80** kg	1 Pc

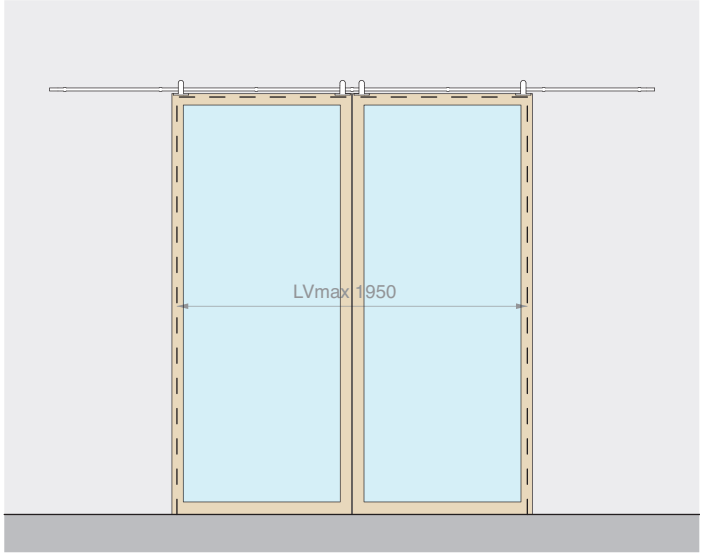

Kit comprising: Finish: /8

Art.	Description	Qty
GNW3500	Kit of 2 rollers	2 Pcs
GLMTND40	Round track L = 4000 mm	1 Pc
GNW20	Wall fixing	7 Pcs
GLM3023	Oval end stop	4 Pcs
057.3010.001	Floor guide	2 Pcs
Optional		
UT200	Pin wrench	1 Pc

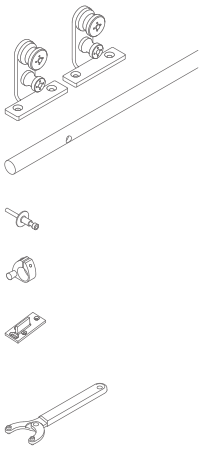

Art.	Description	For door panels	Max. load	Qty
GNW35004	Wall fixing sliding door kit for 2 door panels	≥ **30** mm	**80** + **80** kg	1 Pc

ROLLER

Material: AISI 304 stainless steel

Recommended tool for tightening Art. UT200

Finish: /9 /15

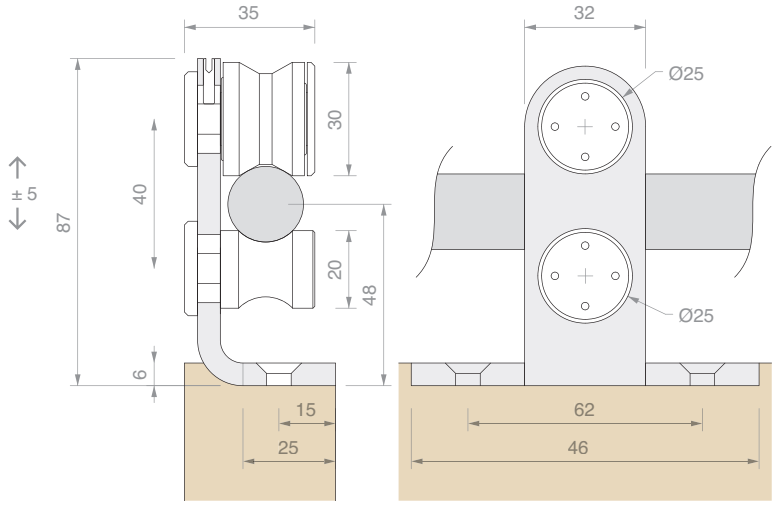

Art.	Description	Qty
GNW3550	Single roller	1 Pc
GNW3500	Kit of 2 rollers	1 Pc

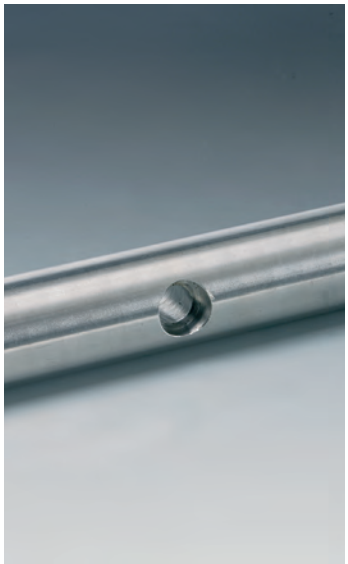

DRILLED SOLID ROUND TRACK

Material: AISI 304 stainless steel

Finish: /8 /15

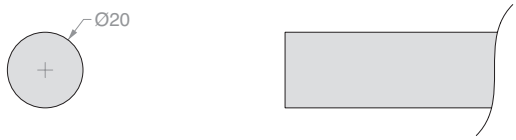

Track drilling pattern:

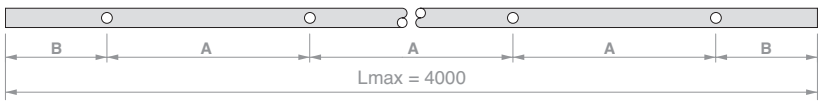

Art.	Length	No. holes	Dimensions		Qty
GLMTND20	**2000** mm	**5**	A **450** mm	B **100** mm	1 Pc
GLMTND30	**3000** mm	**6**	A **560** mm	B **100** mm	1 Pc
GLMTND40	**4000** mm	**7**	A **633** mm	B **100** mm	1 Pc
GLMBDLN15	**cut to size**	**-**	**-**	**-**	1 m
GLMFORO	**Hole** for GLMBDLN15	**1**	**cut to size**	**cut to size**	1 Pc

WALL FIXING

Material: AISI 304 stainless steel

Finish: /9 /15

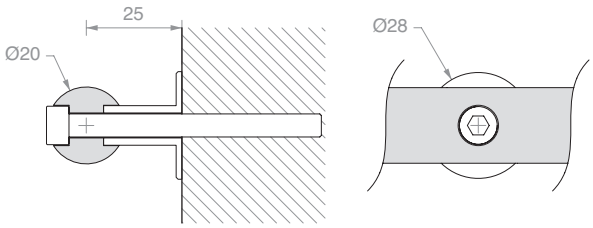

Art.	Description	Qty
GNW20	With **M6** mm x **60** mm screws	1 Pc

SIDE WALL FIXING

Material: AISI 304 stainless steel

Finish: /9 /15

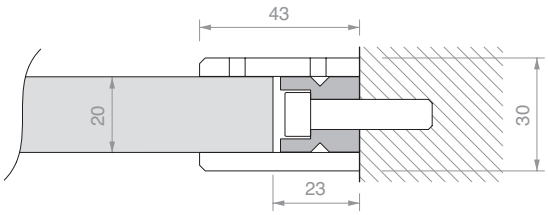

Art.	Qty
GLMDSTP	1 Pc

OVAL END STOP WITH RUBBER BUMPER

Material: AISI 304 stainless steel

Finish: /9 /15

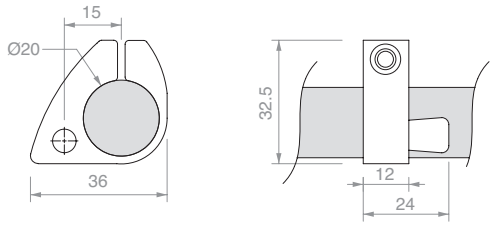

Art.	Qty
GLM3023	1 Pc

FLOOR GUIDE

Material: plastic

Finish: /6

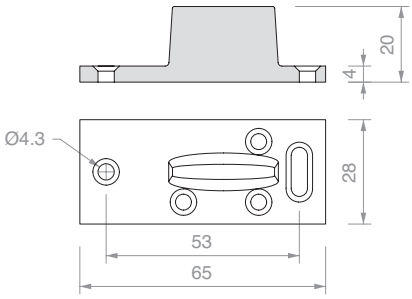

Art.	Qty
057.3010.001	1 Pc

PIN WRENCH

Material: iron body, steel pins

The compass opening allows to operate with wide radiuses,
for pair of holes with a centre distance between 9 mm and 55 mm

Art.	Description	Qty
UT200	Pin wrench with Ø1.9 mm pins	1 Pc
UTC200R	2 replacements pins Ø1.9 mm	1 Pc

TRACK FIXING

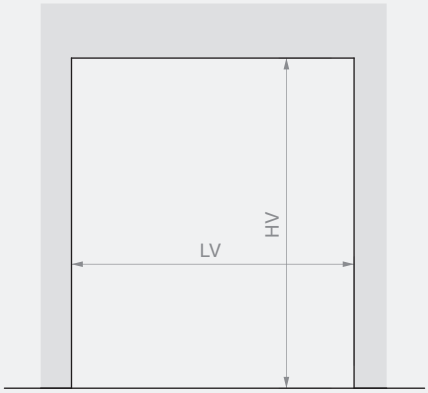

Track L = 2000 mm
LVmax 945 mm

Track L = 3000 mm
LVmax 1445 mm

Track L = 4000 mm
LVmax 1950 mm

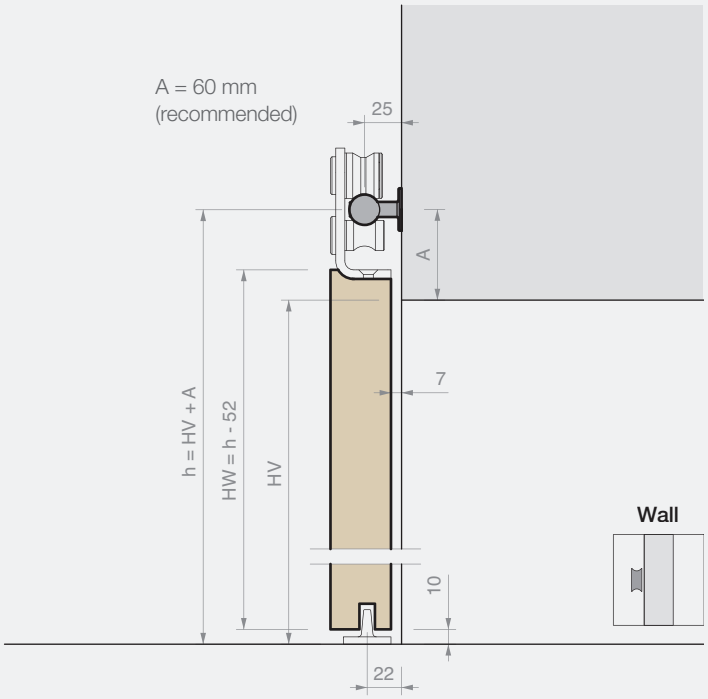

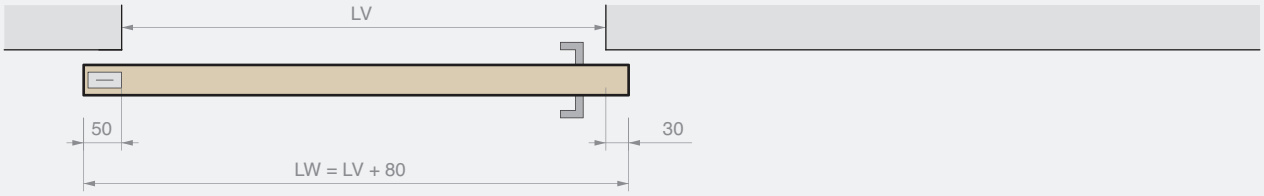

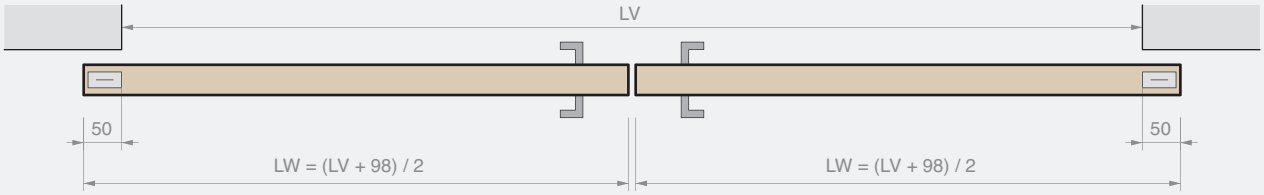

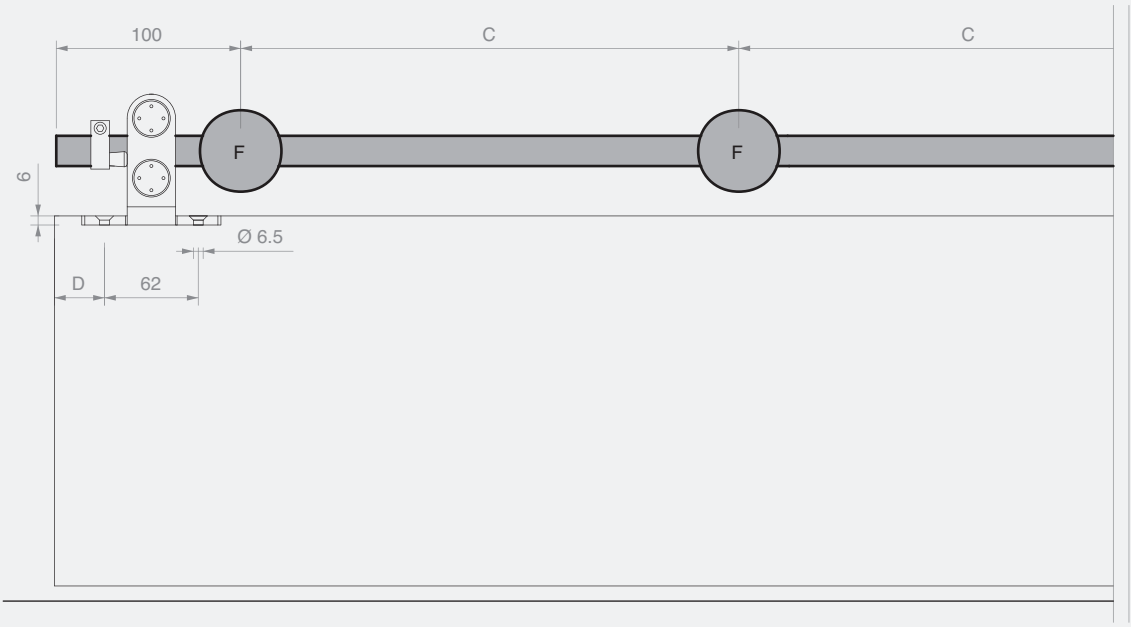

Track L = 2000 mm
5 fixings (F)
C = 450 mm
D ≥ 45 mm

Track L = 3000 mm
6 fixings (F)
C = 560 mm
D ≥ 45 mm

Track L = 4000 mm
7 fixings (F)
C = 633 mm
D ≥ 45 mm

LOCK FOR SLIDING DOORS WITH GRIP

Material: AISI 304 stainless steel

Supplied with European cylinder and 3 keys

Finish: /8 /15

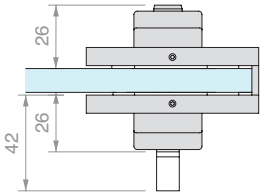

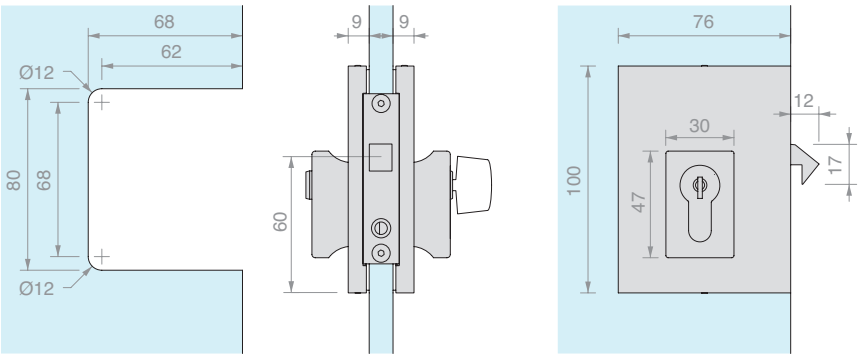

Art.	For glass	Lock	Key	Qty
SERSD915S	From **8** to **12** mm	Lock + lock	Different	1 Pc
SERSD915SU	From **8** to **12** mm	Lock + lock	Single	1 Pc
SERSD915P	From **8** to **12** mm	Door knob + lock	Single	1 Pc

GLASS COUNTERLOCK

Material: AISI 304 stainless steel

Finish: /8 /15

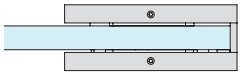

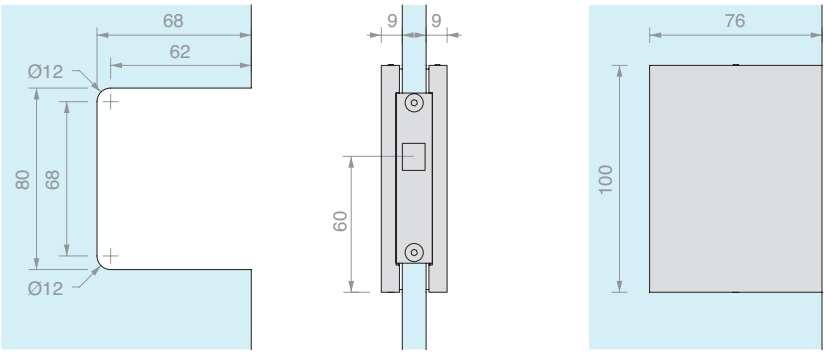

Art.	For glass	Qty
SERSD941	From **8** to **12** mm	1 Pc

ADHESIVE GASKET FOR GLASS EDGE

Material: TPE

10 m roll

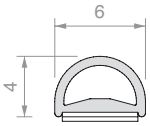

Art.	Colour	Qty
057.3080.001	Transparent	1 Pc
057.3080.002	Black	1 Pc

GLASS BUMPER ADHESIVE GASKET FOR GLASS EDGE

Material: TPE

12 m roll supplied with transparent VHB high adhesion two-sided tape for -40°C to +150°C

Colour: embossed

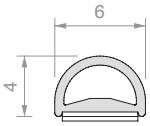

Art.	For glass	Qty
GSB12	From **8** to **13.5** mm	1 Pc

DEGREASING WIPE

Disposable isopropyl alcohol wipe

Art.	Q.ty
GSLSVL	1 Pc

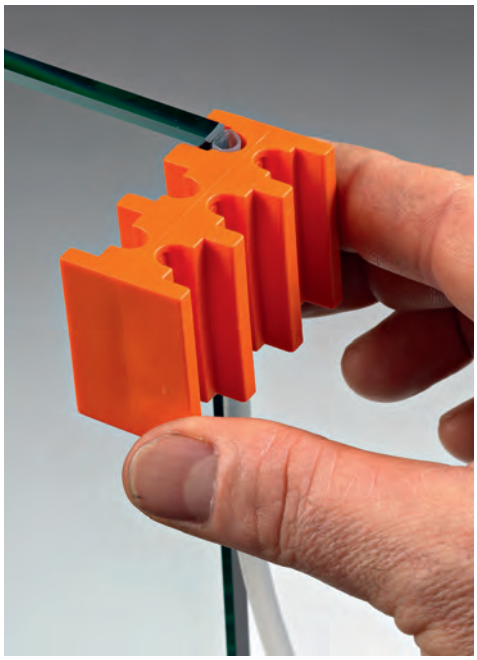
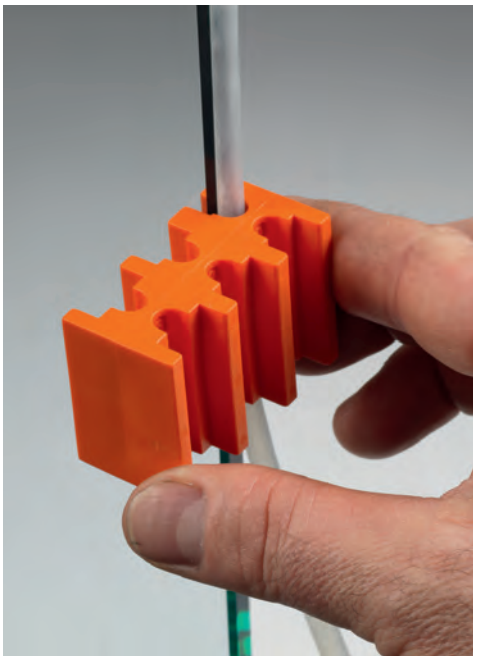

GSB12 MOUNTING TEMPLATE

Plastic mounting template for positioning the glass at the centre of the edge along the whole length.
Material: Plastic

Art.	Q.ty
GSB831	1 Pc

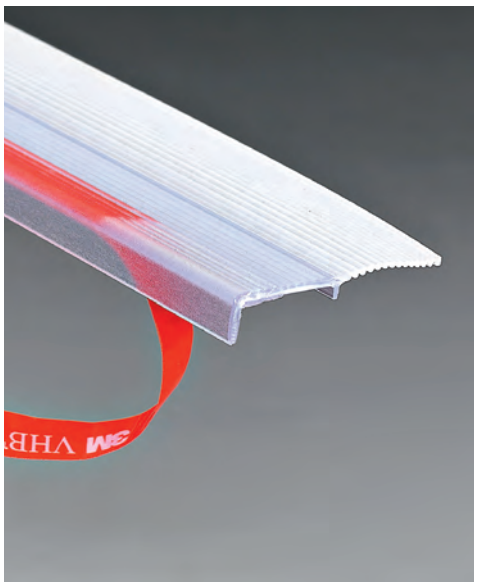

ADHESIVE GLASS LIP SLIDE GASKET WITH LEAK PROTECTION LIP THAT CAN BE SHORTENED

Material: TPE
Pack of 4 pcs each 3000 m long, supplied with transparent VHB high adhesion two-sided tape for -40°C to +150°C
Colour: embossed

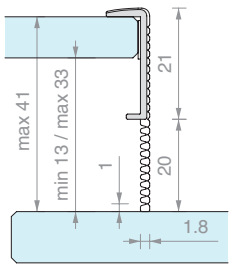

Art.	L	For glass	Qty
GSLS217	**3000** mm	From **8** to **13.5** mm	1 Pc

SYSTEMS FOR GLASS PARTITION WALLS

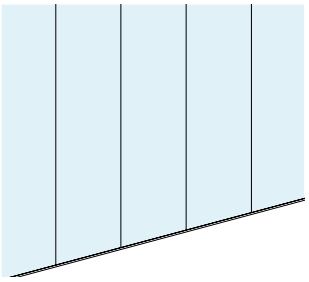

GLASS PARTITIONS

PROFIX
Page 392

SUPER PROFIX
Page 394

PROFIX 2
Page 396

PROFALL
Page 400

PROALUX
Page 402

LOAD-BEARING PROFILES AND SPIDER
Page 405

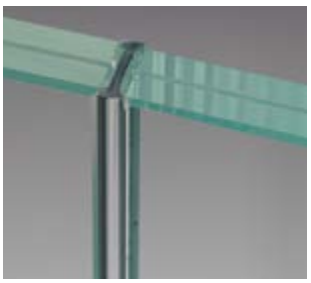

POLYCARBONATE PROFILES
Page 416

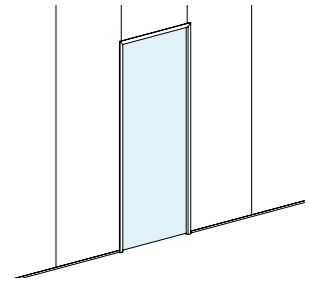

GLASS DOOR
ON GLASS WALL

PROFIX DOOR
Page 418

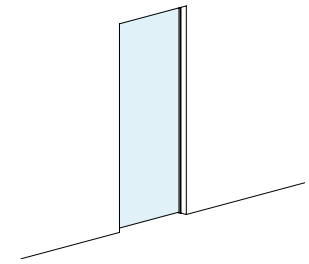

GLASS DOOR
ON SOLID WALL

L- AND Z-SHAPED IMBOTTE
Page 432

M-SHAPED IMBOTTE
Page 446

GLASS PARTITIONS

Product range

Logli systems offer solutions for all types of glass partitions and for solid walls.
Choose from fixed or snap-on U-shaped channels, which can also be installed in complex situations.
It is also possible to install a swing-door system on a fixed glass wall.

Choose your preferred from a range of finishes, which can be customised (on demand).

/6
Matt black

/88
Brushed steel effect aluminium

/91
Polished aluminium

/97
Matt aluminium

PROFIX
Page 392

SUPER PROFIX
Page 394

PROFIX 2
Page 396

PROFALL
Page 400

PROALUX
Page 402

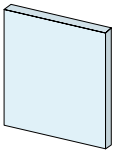

Panel thickness
8/**13.5** mm

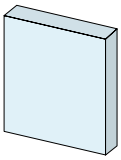

Panel thickness
15/**21.5** mm

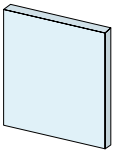

Panel thickness
6/**13.5** mm

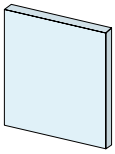

Panel thickness
8/**13.5** mm

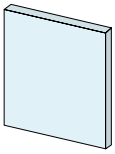

Panel thickness
8/**12** mm

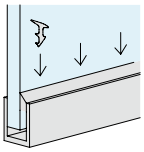

Seal

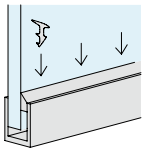

Seal

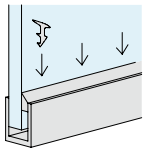

Seal

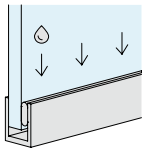

Adhesive

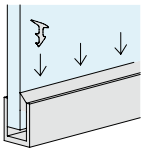

Seal

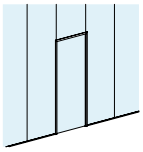

Compatible with door system

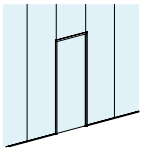

Compatible with door system

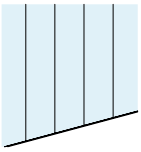

Not compatible with door system

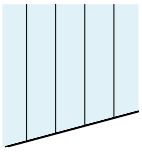

Not compatible with door system

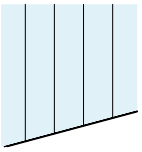

Not compatible with door system

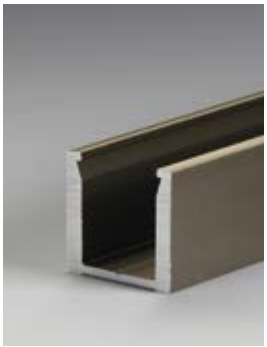

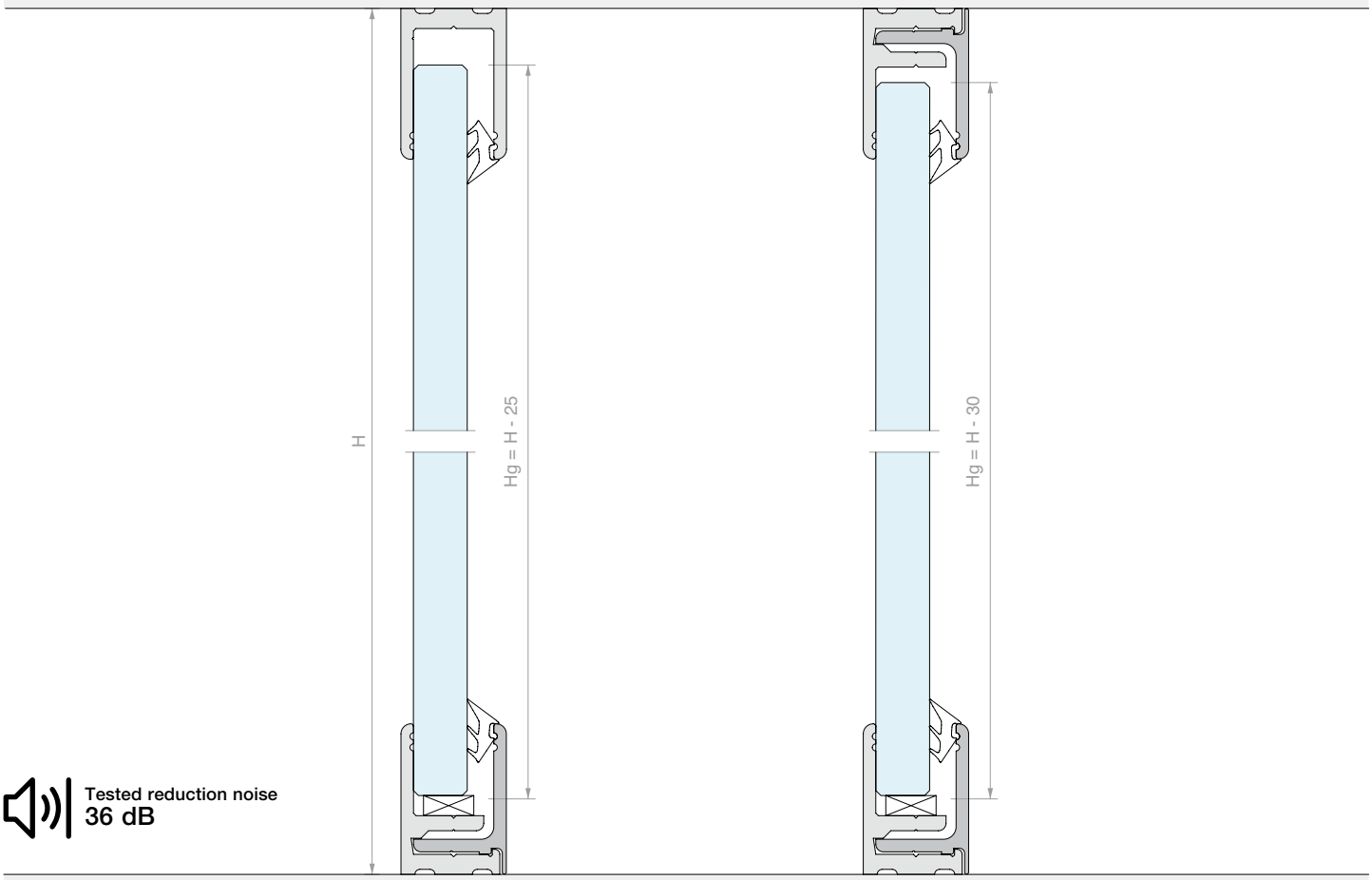

Tested reduction noise
36 dB

PROFIX U-SHAPED PROFILE

Material: Aluminium
GTUP seal to be ordered separately
Finish: /6 /10 /88 /91 /97
*/91 only available in L = 3000 mm

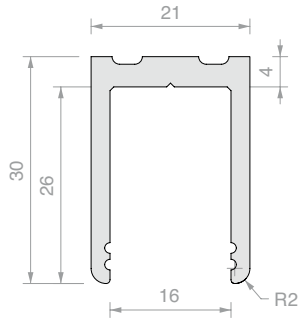

Fmax*
2 kN/m

Art.	Length	For fixed glass	Qty
PROFIX1630	**3000** mm	From **8** to **13.5** mm	1 Pc
PROFIX1660	**6000** mm	From **8** to **13.5** mm	1 Pc

PROFIX PRE-DRILLED SNAP-ON PROFILE

Material: Aluminium
GTUP seal to be ordered separately
Finish: /6 /10 /88 /91 /97
*/91 only available in L = 3000 mm

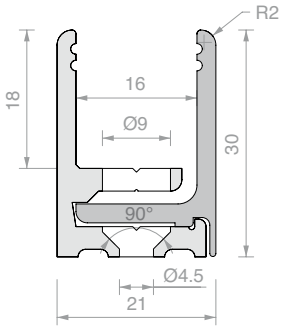

Fmax*
2 kN/m

Fmax*
2 kN/m

Art.	Length	For fixed glass	Qty
PROFIX2130	**3000** mm	From **8** to **13.5** mm	1 Pc
PROFIX2160	**6000** mm	From **8** to **13.5** mm	1 Pc

PROFIX CAP

Material: Aluminium

Finish: /6 /10 /88 /91 /97

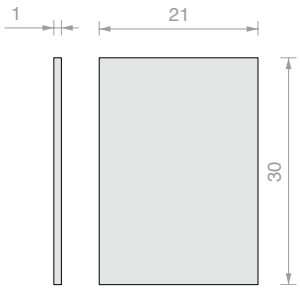

Art.	Qty
PROFIXTPU	1 Pc

GLASS HOLDER SEAL

Material: PVC

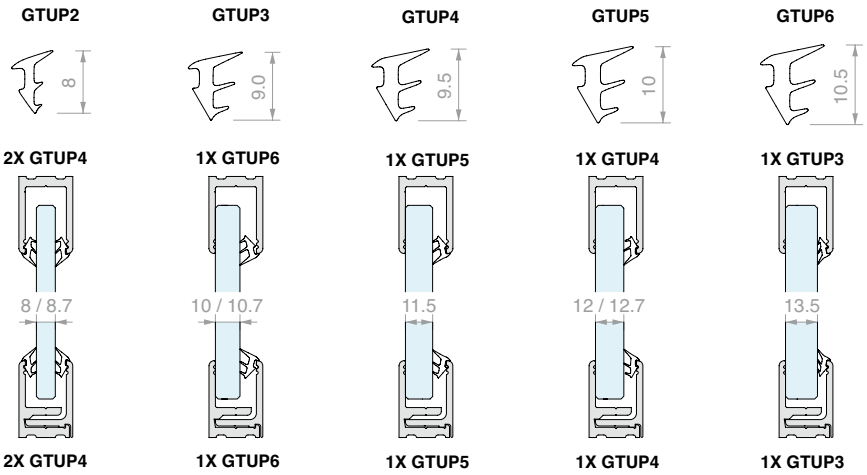

Art.	Thickness	Colour	Qty
GTUP2	2 mm	Transparent	1 m
GTUP3	3 mm	Transparent	1 m
GTUP4	4 mm	Transparent	1 m
GTUP5	5 mm	Transparent	1 m
GTUP6	6 mm	Transparent	1 m

Art.	Thickness	Colour	Qty
GTUP2G	2 mm	Embossed	1 m
GTUP3G	3 mm	Embossed	1 m
GTUP4G	4 mm	Embossed	1 m
GTUP5G	5 mm	Embossed	1 m
GTUP6G	6 mm	Embossed	1 m

Art.	Thickness	Colour	Qty
GTUP2N	2 mm	Black	1 m
GTUP3N	3 mm	Black	1 m
GTUP4N	4 mm	Black	1 m
GTUP5N	5 mm	Black	1 m
GTUP6N	6 mm	Black	1 m

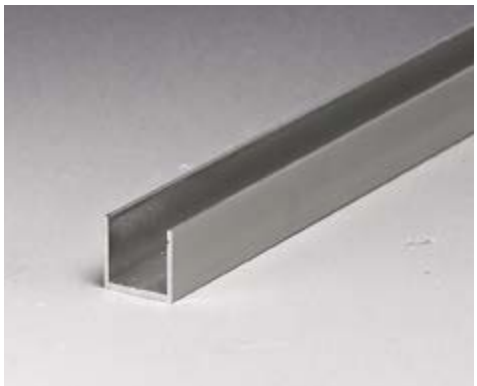

PROFIX WALL/GLASS U-SHAPED PROFILE

Material: Aluminium

Positioned between glass and wall, the profile must be inserted inside the U-shaped profiles

Finish: /6 /10 /88 /91 /97

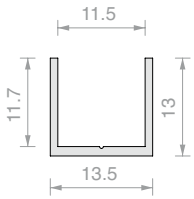

Art.	Length	Qty
PROFIX4272	3000 mm	1 Pc

PROFIX GLASS/GLASS H-SHAPED PROFILE

Material: Aluminium

Positioned between two glasses, the profile must be inserted inside the U-shaped profiles

Finish: /6 /10 /88 /91 /97

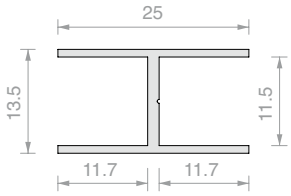

Art.	Length	Qty
PROFIX4125	3000 mm	1 Pc

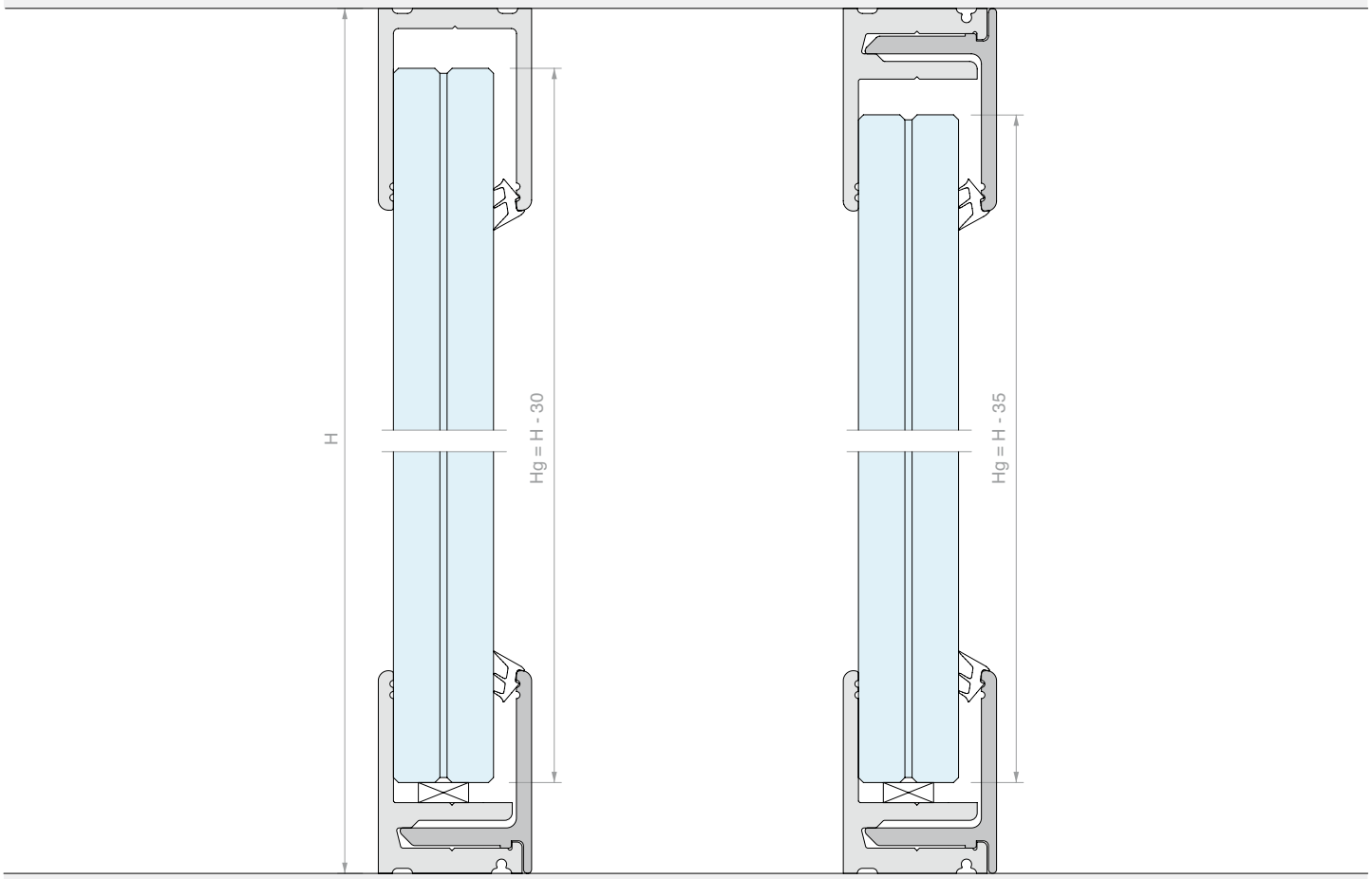

SUPER PROFIX U-SHAPED PROFILE

Material: Aluminium
GTUP gasket
to be ordered separately
Finish: /6 /10 /88 /91 /97
*/91 only available in L = 3000 mm

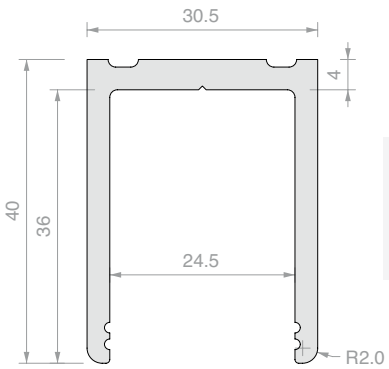

Fmax*
5 kN/m

Art.	Length	For fixed glass	Qty
PROFIX2430	**3000** mm	From **15** to **21.5** mm	1 Pc
PROFIX2460	**6000** mm	From **15** to **21.5** mm	1 Pc

SUPER PROFIX PRE-DRILLED SNAP-ON PROFILE

Material: Aluminium
GTUP gasket
to be ordered separately
Finish: /6 /10 /88 /91 /97
*/91 only available in L = 3000 mm

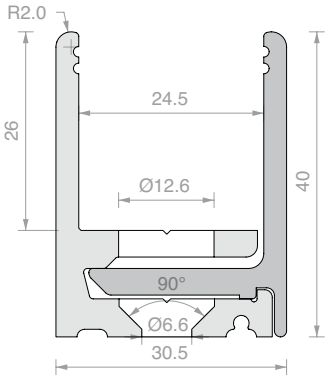

Fmax*
6 kN/m

Fmax*
6 kN/m

Art.	Length	For fixed glass	Qty
PROFIX3030	**3000** mm	From **15** to **21.5** mm	1 Pc
PROFIX3060	**6000** mm	From **15** to **21.5** mm	1 Pc

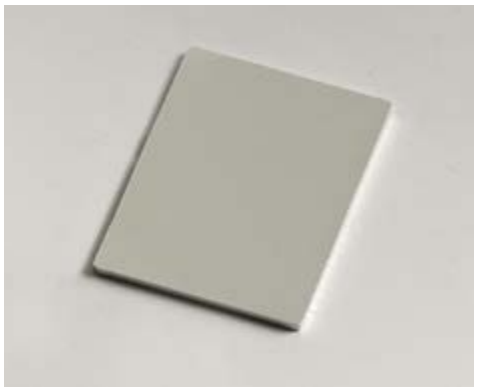

SUPER PROFIX CAP

Material: Aluminium

Finish: /6 /10 /88 /91 /97

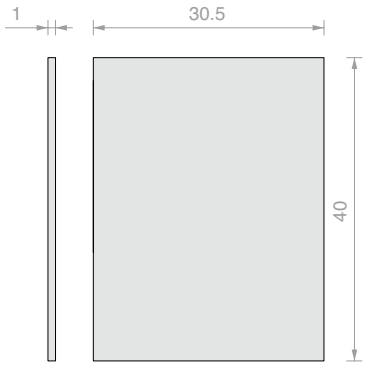

Art.	Qty
PROFIXTPU810	1 Pc

GLASS HOLDER SEAL

Material: PVC

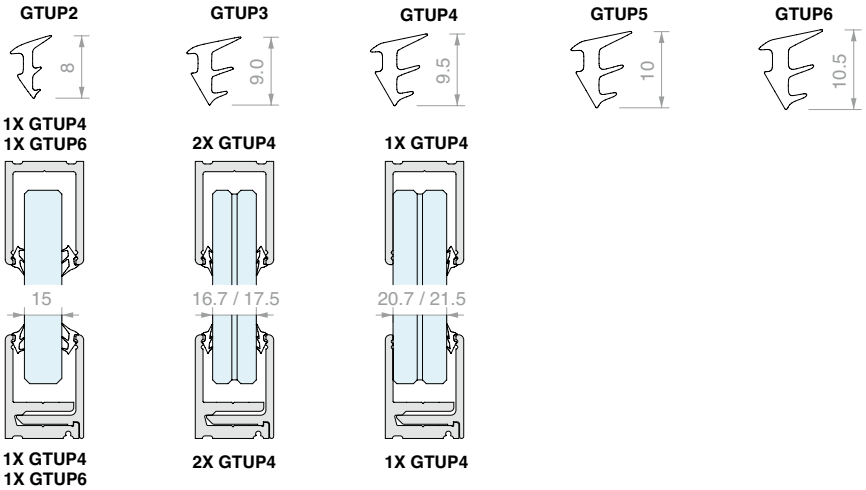

Art.	Thickness	Colour	Qty	Art.	Thickness	Colour	Qty	Art.	Thickness	Colour	Qty
GTUP2	2 mm	Transparent	1 m	**GTUP2G**	2 mm	Embossed	1 m	**GTUP2N**	2 mm	Black	1 m
GTUP3	3 mm	Transparent	1 m	**GTUP3G**	3 mm	Embossed	1 m	**GTUP3N**	3 mm	Black	1 m
GTUP4	4 mm	Transparent	1 m	**GTUP4G**	4 mm	Embossed	1 m	**GTUP4N**	4 mm	Black	1 m
GTUP5	5 mm	Transparent	1 m	**GTUP5G**	5 mm	Embossed	1 m	**GTUP5N**	5 mm	Black	1 m
GTUP6	6 mm	Transparent	1 m	**GTUP6G**	6 mm	Embossed	1 m	**GTUP6N**	6 mm	Black	1 m

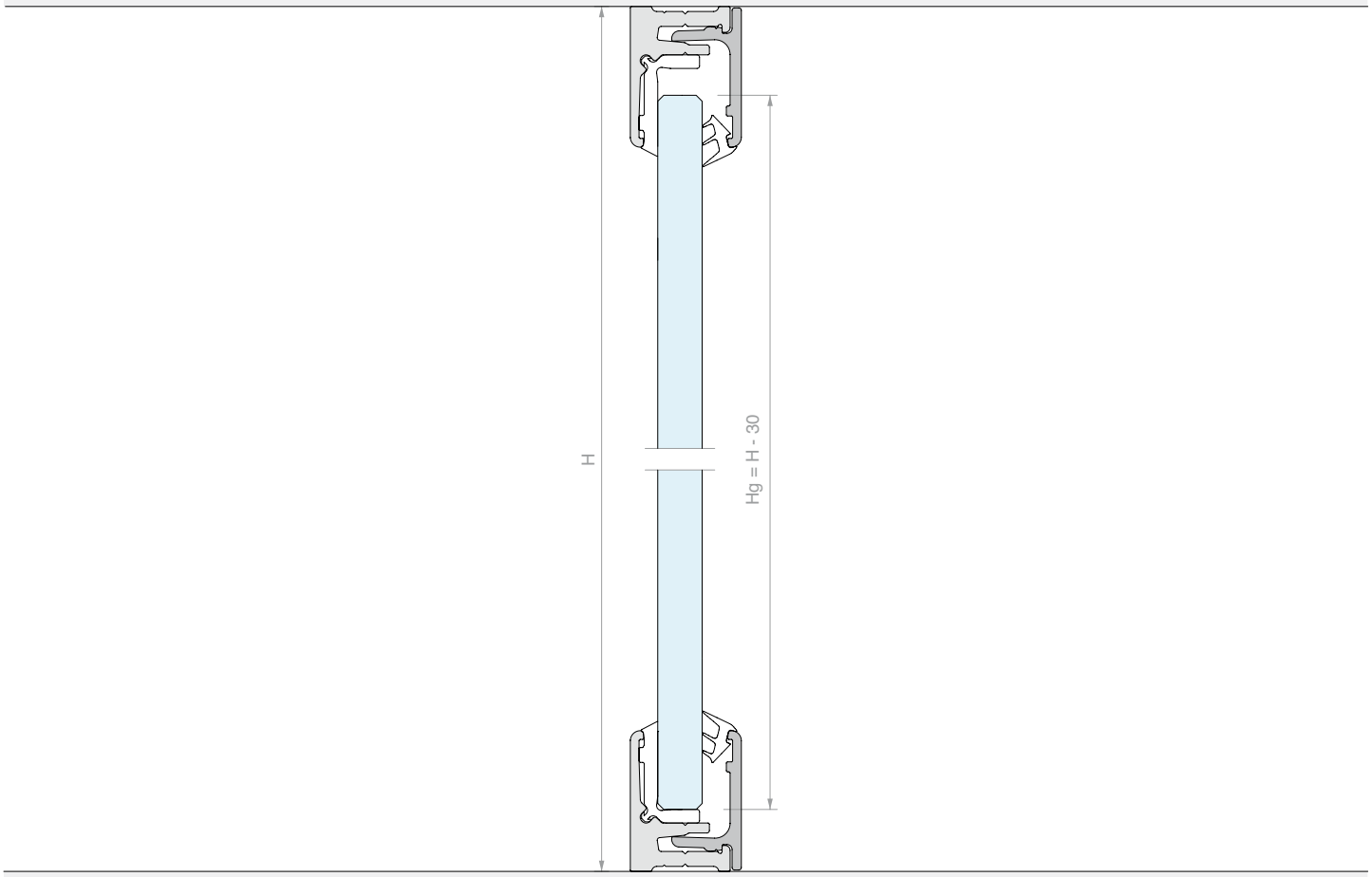

PROFIX PRE-DRILLED SNAP-ON PROFIX 2

Material: Aluminium
L-shaped seal included on one side
GTUP seal to be ordered separately
Finish: /6 /10 /88 /91 /97
*/91 only available in L = 3000 mm

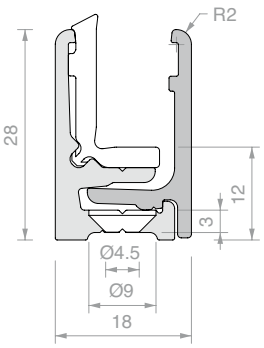

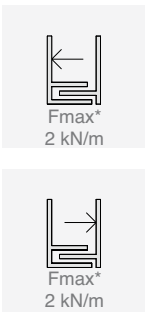

Art.	Length	For fixed glass	Qty
PROFIX1830	**3000** mm	From **6** to **8.7** mm	1 Pc
PROFIX1860	**6000** mm	From **6** to **8.7** mm	1 Pc

PROFIX PRE-DRILLED SNAP-ON PROFIX 2

Material: Aluminium
L-shaped seal included on one side
GTUP seal to be ordered separately
Finish: /6 /10 /88 /91 /97
*/91 only available in L = 3000 mm

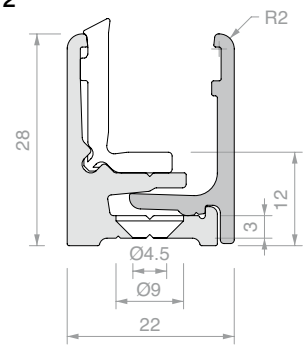

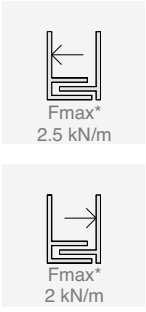

Art.	Length	For fixed glass	Qty
PROFIX2230	**3000** mm	From **10** to **11.5** mm	1 Pc
PROFIX2260	**6000** mm	From **10** to **11.5** mm	1 Pc

PROFIX PRE-DRILLED SNAP-ON PROFIX 2

Material: Aluminium
L-shaped seal included on one side
GTUP seal to be ordered separately
Finish: /6 /10 /88 /91 /97
*/91 only available in L = 3000 mm

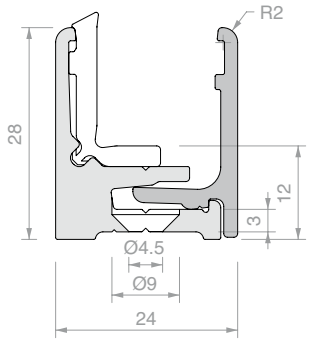

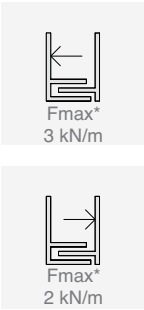

Art.	Length	For fixed glass	Qty
PROFIX2530	**3000** mm	From **12** to **13.5** mm	1 Pc
PROFIX2560	**6000** mm	From **12** to **13.5** mm	1 Pc

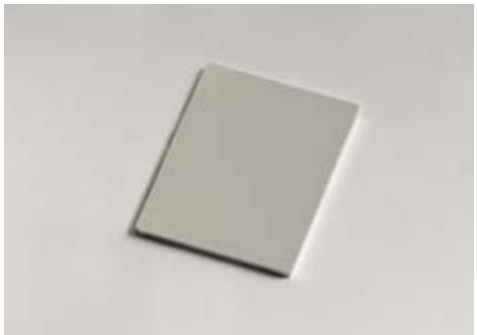

PROFIX 2 CAP

Material: Aluminium
Finish: /6 /10 /88 /91 /97

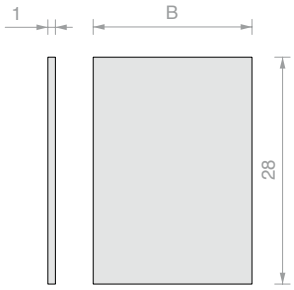

Art.	B	Qty
PROFIXTP18	**18** mm	1 Pc
PROFIXTP22	**22** mm	1 Pc
PROFIXTP25	**24** mm	1 Pc

L-SHAPED SEAL FOR PROFIX 2

Material: PVC, embossed

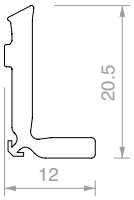

Art.	Qty
PROFIXG	1 m

Art.	Description	Qty
UTR65	Wheel tool	1 Pc

GLASS HOLDER SEAL

Material: PVC

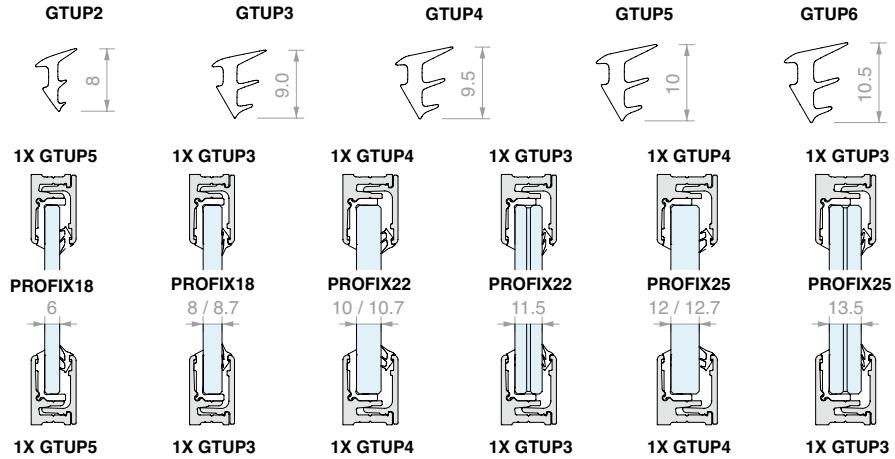

Art.	Thickness	Colour	Qty
GTUP2	**2** mm	Transparent	1 m
GTUP3	**3** mm	Transparent	1 m
GTUP4	**4** mm	Transparent	1 m
GTUP5	**5** mm	Transparent	1 m
GTUP6	**6** mm	Transparent	1 m

Art.	Thickness	Colour	Qty
GTUP2G	**2** mm	Embossed	1 m
GTUP3G	**3** mm	Embossed	1 m
GTUP4G	**4** mm	Embossed	1 m
GTUP5G	**5** mm	Embossed	1 m
GTUP6G	**6** mm	Embossed	1 m

Art.	Thickness	Colour	Qty
GTUP2N	**2** mm	Black	1 m
GTUP3N	**3** mm	Black	1 m
GTUP4N	**4** mm	Black	1 m
GTUP5N	**5** mm	Black	1 m
GTUP6N	**6** mm	Black	1 m

The following numerical analysis has been conducted considering a linear design force P applied at a height hP = 120 cm from the floor.

The resulting values set out in the tables are calculated considering a continuous upper and lower constraint.

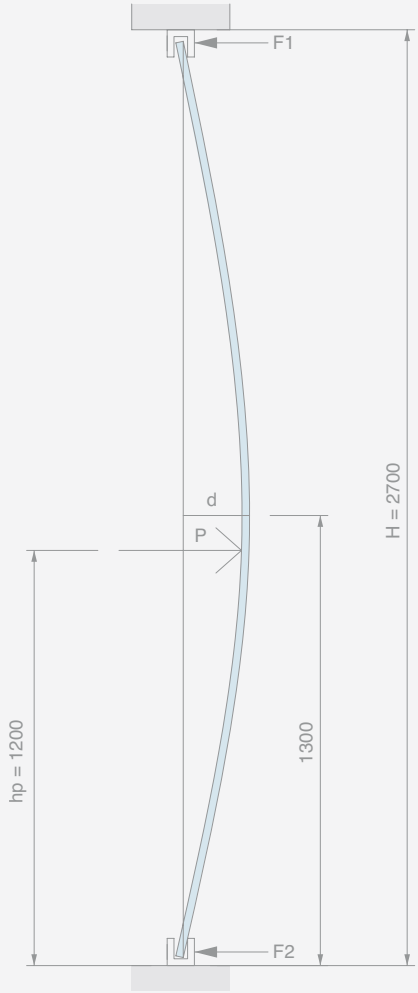

Tab. A

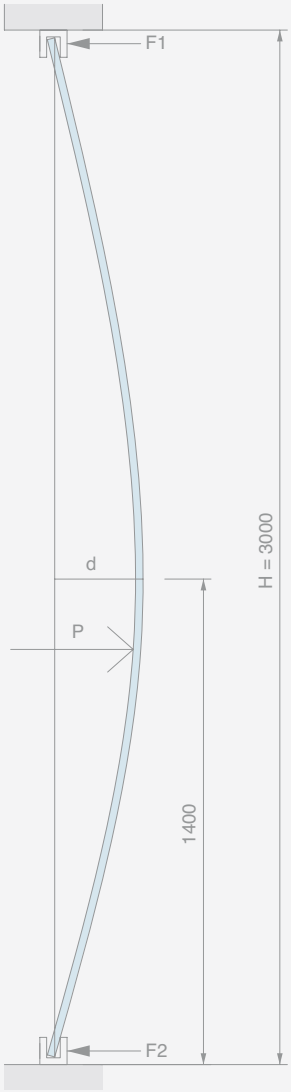

Tab. B

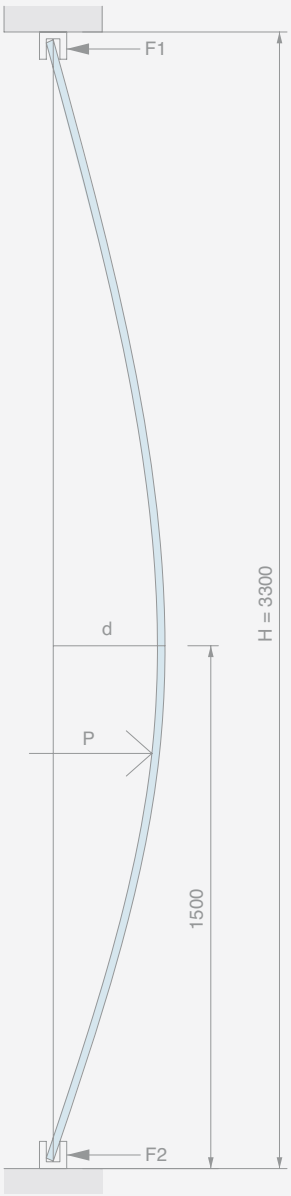

Tab. C

*The data provided have been obtained using numerical models under EN 1999-1-1 and refer to the maximum applicable load, Fmax, at the Ultimate Limit State (ULS), for installations with a fixing center to center distance of 300 mm. The fastening of the screws to the structure must be checked separately: the information shown refers exclusively to the strength of the aluminium profiles. The stress transmitted by the glass panels is considered to be distributed horizontally across the vertical internal surface of the profile. Where a seal is included, the force is considered to be transferred from the glass to the profile through the compression of the seal. For more detailed information, contact the Logli Saint-Gobain technical office.

For walls of height H which are simply supported on the bottom and top side, forces F1 and F2 on profiles can be calculated using the following formulae:

$$F1 = \frac{P*hp}{H}$$

$$F2 = \frac{P*(H-hp)}{H}$$

The recommended design values F1 and F2 for the individual profiles can be found on the respective pages of the articles.

	Table A H. 2700 mm		Table B H. 3000 mm		Table C H. 3300 mm	
	Pmax ULS [kN/m]	d (Pmax) [mm]	Pmax ULS [kN/m]	d (Pmax) [mm]	Pmax ULS [kN/m]	d (Pmax) [mm]
5+5/0.76 float PVB	0.44	26	0.41	31	0.39	37
5+5/0.76 float DG41	0.47	26	0.44	32	0.41	38
6+6/0.76 float PVB	0.62	22	0.57	27	0.54	32
6+6/0.76 float DG41	0.66	22	0.61	27	0.58	32
8+8/1.52 float PVB	1.12	17	1.04	21	0.99	24
8 mm tempered	1.27	166	1.18	203	1.11	243
8+8/1.52 float DG41	1.29	17	1.20	21	1.13	25
10+10/1.52 float PVB	1.69	15	1.58	18	1.50	21
10 mm tempered	1.96	133	1.82	162	1.72	194
10+10/1.52 float DG41	1.99	14	1.84	17	1.73	20
5+5/0.76 tempered PVB	2.10	123	1.96	149	1.85	177
5+5/0.76 tempered DG41	2.24	123	2.08	150	1.96	179
12 mm tempered	2.80	112	2.59	136	2.44	163
6+6/0.76 tempered PVB	2.93	105	2.72	127	2.58	151
6+6/0.76 tempered DG41	3.15	106	2.91	128	2.74	153
15 mm tempered	4.47	93	4.12	113	3.87	134
8+8/1.52 tempered PVB	5.30	83	4.94	99	4.69	116
8+8/1.52 tempered DG41	6.14	80	5.67	98	5.34	117
19 mm tempered	7.37	75	6.81	92	6.41	110
10+10/1.52 tempered PVB	8.03	70	7.51	83	7.13	97
10+10/1.52 tempered DG41	9.42	67	8.72	81	8.22	97

The information is provided for information purposes only, in order to assist designers with preliminary sizing and selection of the most suitable types of glass panels to suit their requirements. The calculation of the design load and the required rigidity must be made on a case-by-case basis, according to the actual installation conditions, the type of glass panel, and any local or national regulatory requirements. For glass panels which are simply installed without clamps or silicone, it is recommended that the relevant checks are made regarding the risk of detachment due to flexion under load. The results shown relate to the Ultimate Limit Station (ULS), applying a safety factor of 1.5 to the loads and obtained from calculations carried out accordign to EN 16612. For laminated glass with a rigid interlayer, the Saflex® DG Structural Interlayer (DG41) has been considered, for PVB a commonly used product has been considered, considering a shear modulus values of G = 0.84 MPa. The loads are considered to be applied at a temperature of 20°C for a duration of 30 seconds.

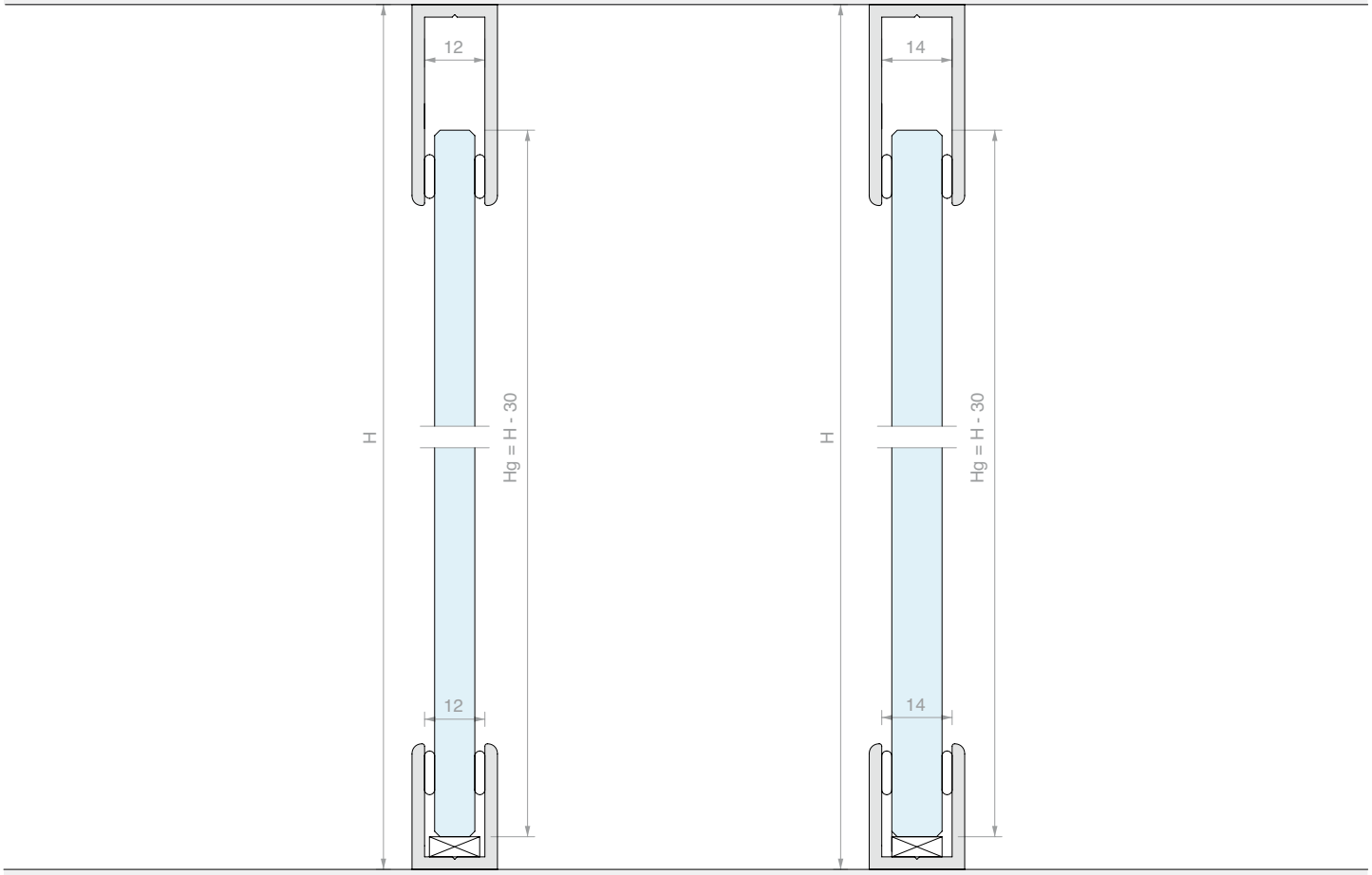

PROFALL U-SHAPED PROFILE

Material: Aluminium

Finish: /6 /88 /91 /97

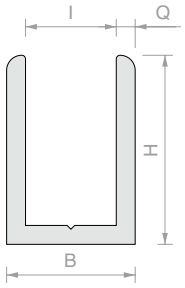

Art.	H	B	I	Q	Length	Qty
PROFALL1225	25 mm	17 mm	12 mm	2.5 mm	3000 mm	1 Pc
PROFALL1240	40 mm	17 mm	12 mm	2.5 mm	3000 mm	1 Pc
PROFALL1425	25 mm	19 mm	14 mm	2.5 mm	3000 mm	1 Pc
PROFALL1440	40 mm	19 mm	14 mm	2.5 mm	3000 mm	1 Pc
PROFALL0820	20 mm	11.5 mm	8.5 mm	1.5 mm	3000 mm	1 Pc
PROFALL1020	20 mm	13.5 mm	10.5 mm	1.5 mm	3000 mm	1 Pc

PROFALL CAPS

Material: Aluminium

Finish: /88 /91 /97 /R2

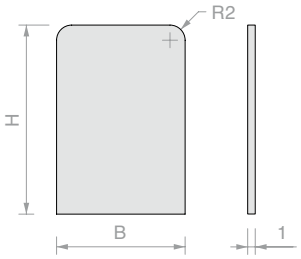

Art.	H	B	Qty
PROTAP1225	25 mm	17 mm	1 Pc
PROTAP1240	40 mm	17 mm	1 Pc
PROTAP1425	25 mm	19 mm	1 Pc
PROTAP1440	40 mm	19 mm	1 Pc
PROTAP0820	20 mm	11.5 mm	1 Pc
PROTAP1020	20 mm	13.5 mm	1 Pc

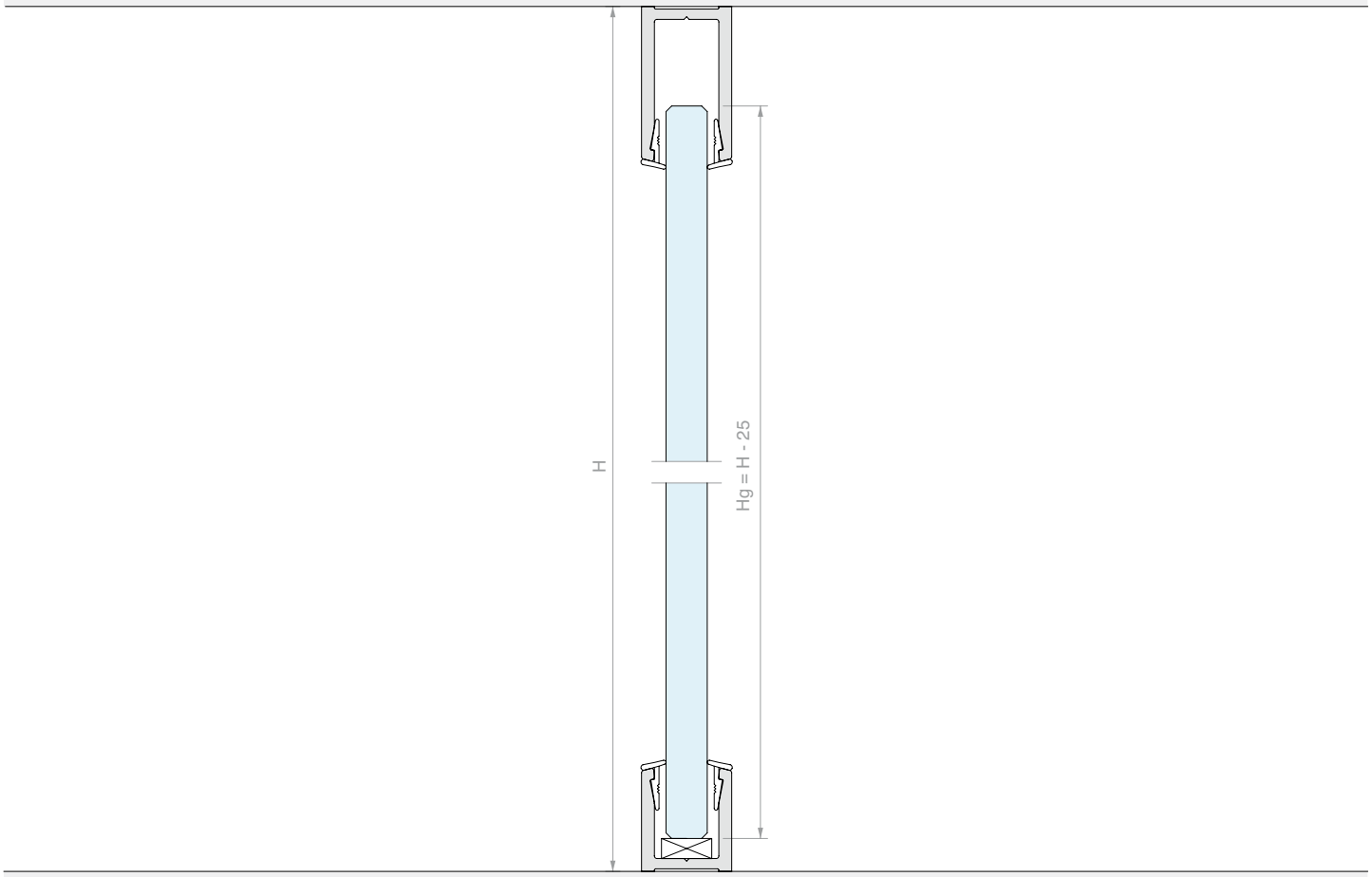

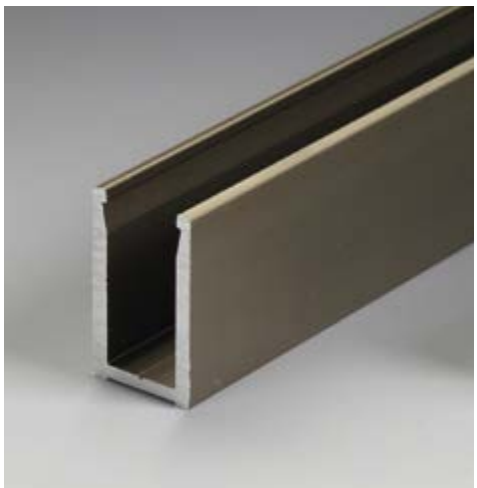

PROALUX U-SHAPED PROFILE

Material: Aluminium
PROALUXG seal to be ordered separately for both sides
Finish: /6 /88 /91 /97

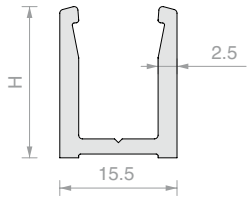

Art.	H	Length	For glass	Qty
PROALUX1520	**20** mm	**3000** mm	**8** mm	1 Pc
PROALUX1530	**30** mm	**3000** mm	**8** mm	1 Pc

PROALUX U-SHAPED PROFILE

Material: Aluminium
PROALUXG seal to be ordered separately for both sides
Finish: /6 /88 /91 /97

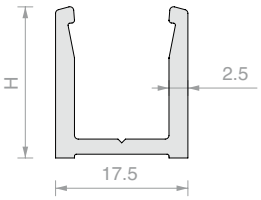

Art.	H	Length	For glass	Qty
PROALUX1720	**20** mm	**3000** mm	**10** mm	1 Pc
PROALUX1730	**30** mm	**3000** mm	**10** mm	1 Pc

PROALUX U-SHAPED PROFILE

Material: Aluminium

PROALUXG seal to be ordered separately for both sides

Finish: /6 /88 /91 /97

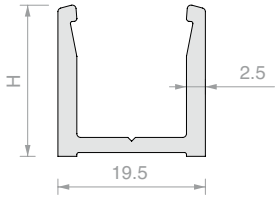

Art.	H	Length	For glass	Qty
PROALUX1920	**20** mm	**3000** mm	**12** mm	1 Pc
PROALUX1930	**30** mm	**3000** mm	**12** mm	1 Pc

PROALUX CAPS

Material: Aluminium

Finish: /88 /91 /97 /R2

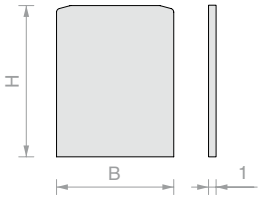

Art.	H	B	Qty
PROTAP1520	**20** mm	**15.5** mm	1 Pc
PROTAP1530	**30** mm	**15.5** mm	1 Pc
PROTAP1720	**20** mm	**17.5** mm	1 Pc
PROTAP1730	**30** mm	**17.5** mm	1 Pc
PROTAP1920	**20** mm	**19.5** mm	1 Pc
PROTAP1930	**30** mm	**19.5** mm	1 Pc

SEAL FOR PROALUX PROFILES

Material: Co-extruded PVC

Colour: Transparent

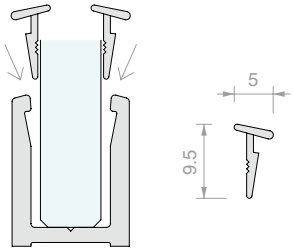

Art.	Description	Qty
PROALUXG	-	1 m
PROALUXG400	400 m roll	1 Pc

WHEEL TOOL

Material: Plastic

For fitting PROFIXG, GTUP and PROALUXG seals

Art.	Qty
UTR651 Pc	

SQUARE PROFILE FOR LOAD-BEARING SYSTEMS

Material: Aluminium

Profile for modular systems to be installed to floor and ceiling, compatible with ELEKTRA and SPIDER HAND series systems.

Finish: /88 /97

Cross-section	8.5 cm^2
Weight	2.282 kg/m
Moment of inertia	Jx = Jy = 14.06 cm^4

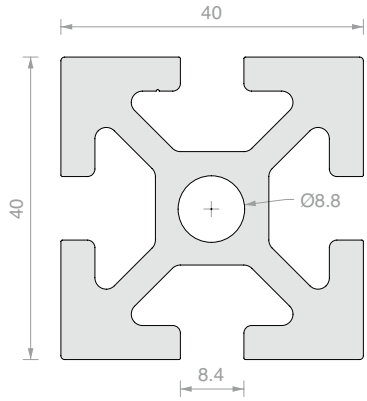

Art.	Description	Length	Qty
R7170	-	**3000** mm	1 Pc
R7170FORO	Cut-to-size and holes on ends M10 x 30 mm	-	1 Pc

RECTANGULAR PROFILE FOR LOAD-BEARING SYSTEMS

Material: Aluminium

Profile for modular systems to be installed to floor and ceiling, or horizontally between two R7170 profiles, compatible with ELEKTRA and SPIDER HAND series systems.

Finish: /88 /97

Cross-section	4.6 cm^2
Weight	1.245 kg/m
Moment of inertia	Jx = 3.3 cm^4
	Jy = 6.5 cm^4

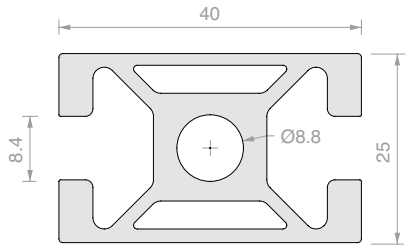

Art.	Description	Length	Qty
R7166	-	**3000** mm	1 Pc
R7170FORO	Cut-to-size and holes on ends M10 x 30 mm	-	1 Pc
R7166FORO	Cut-to-size and through-holes on ends Ø7 mm	-	1 Pc

FINISHING PROFILE FOR LOAD-BEARING SYSTEMS

Material: Aluminium

Snap-on finishing profile for covering the joints of load-bearing systems

Finish: /88 /97

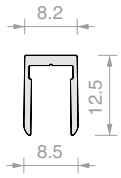

Art.	Length	Qty
R7150	**3000** mm	1 Pc

CEILING ANCHOR PLATE FOR LOAD-BEARING SYSTEMS

Material: AISI 304 steel
Distance of profile from ceiling 42 mm
Finish: /9

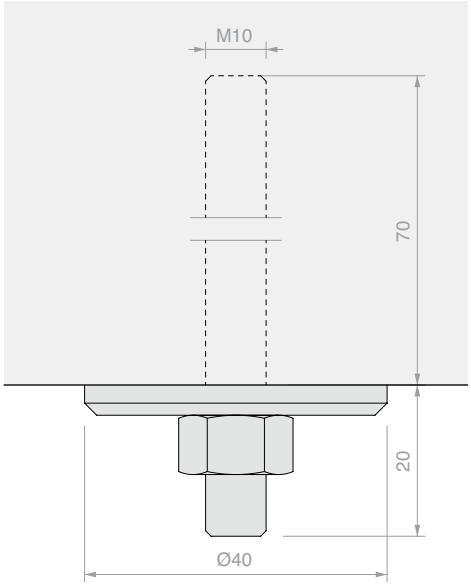

Art.	Qty
RMA1390	1 Pc

ARTICULATED FOOT FOR LOAD-BEARING SYSTEMS

Material: Black nylon, stainless steel
Distance of profile from floor 20 mm
Finish: /6

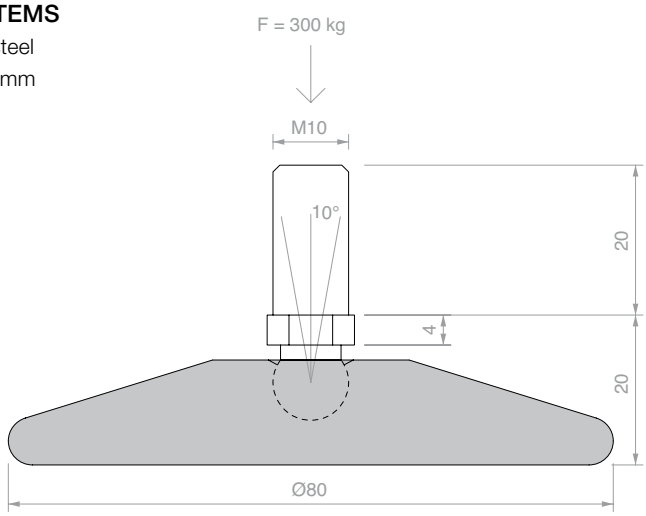

Art.	Qty
RMA1382	1 Pc

BALL SLIDER WITH RING

Material: Galvanised steel, stainless steel
Accessory for fixing articles of the ELEKTRA and SPIDERHAND series onto load-bearing profiles
Finish: /9

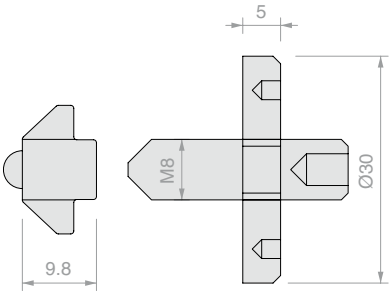

Art.	Qty
RMA1373	1 Pc

U-BOLT CONNECTOR FOR LOAD-BEARING SYSTEMS

Material: Aluminium
Accessory for connecting R7170 and R7166 profiles perpendicularly.
Requires processing R7166FORO at 8 mm from the edge
Finish: /10

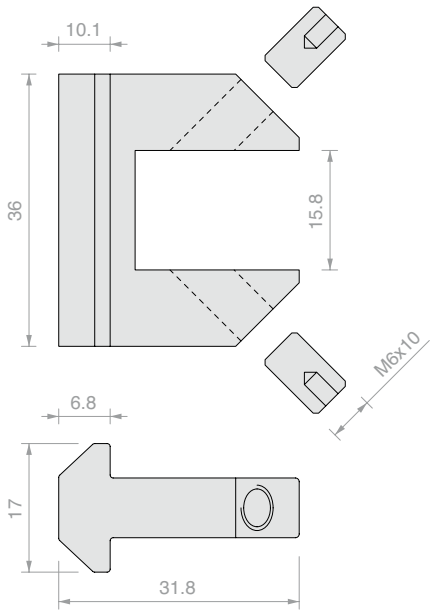

Art.	Qty
RMA1319	1 Pc

PROFILE CUTTING PATTERN

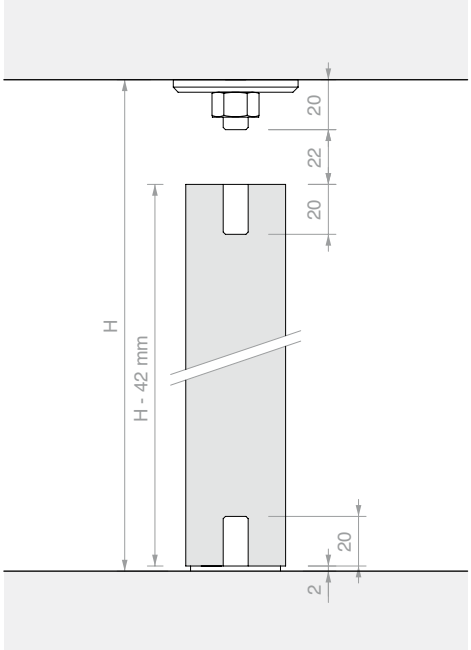

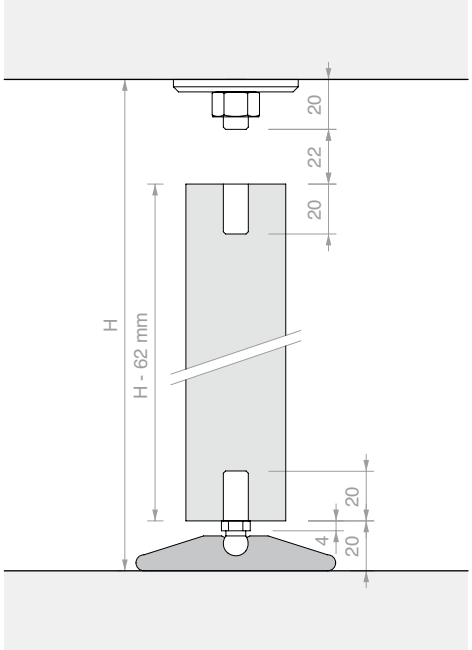

MOUNTING OF CROSSPIECES

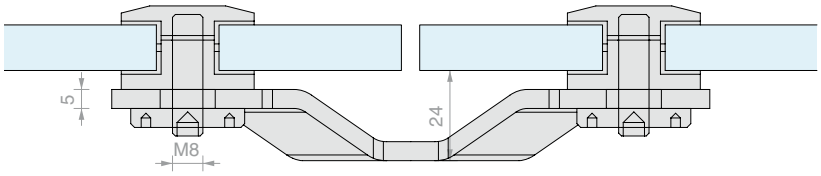

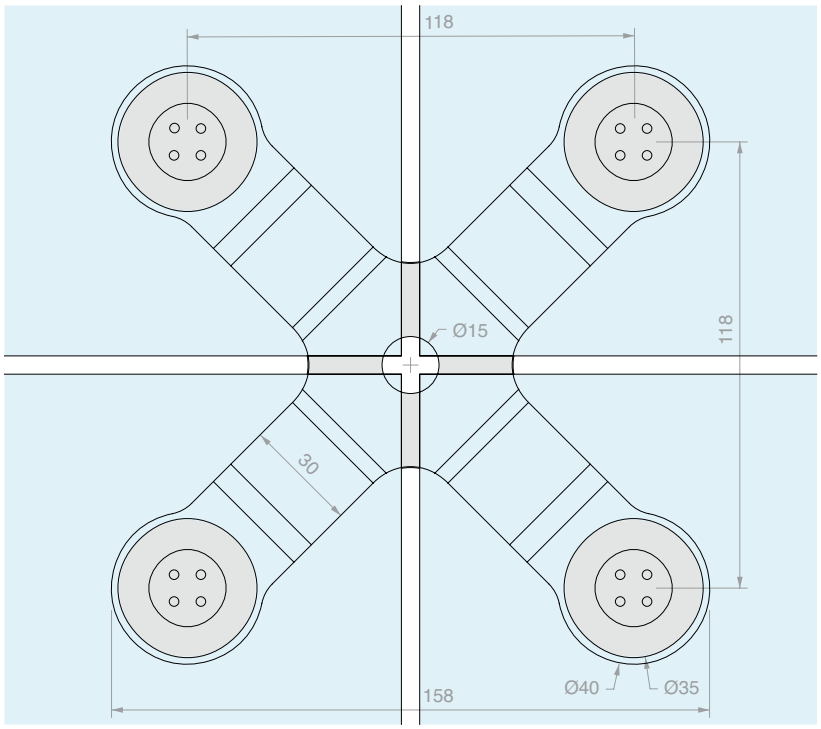

4-WAY CONNECTOR

Material: AISI 304 steel

Recommended hole size Ø18 mm.

Recommended tool for installation Art. UT250.

Finish: /8

Art.	Description	For glass thickness	Qty
ELEKTRA436	With FIXBORK1	From **8** to **12.7** mm	1 Pc
ELEK436	Bracket only	-	1 Pc

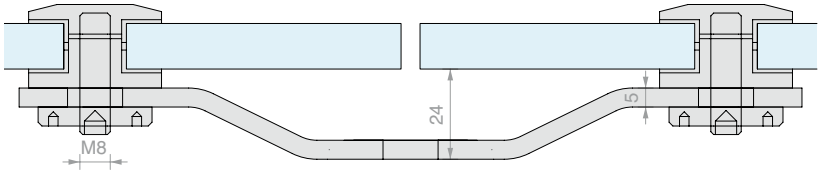

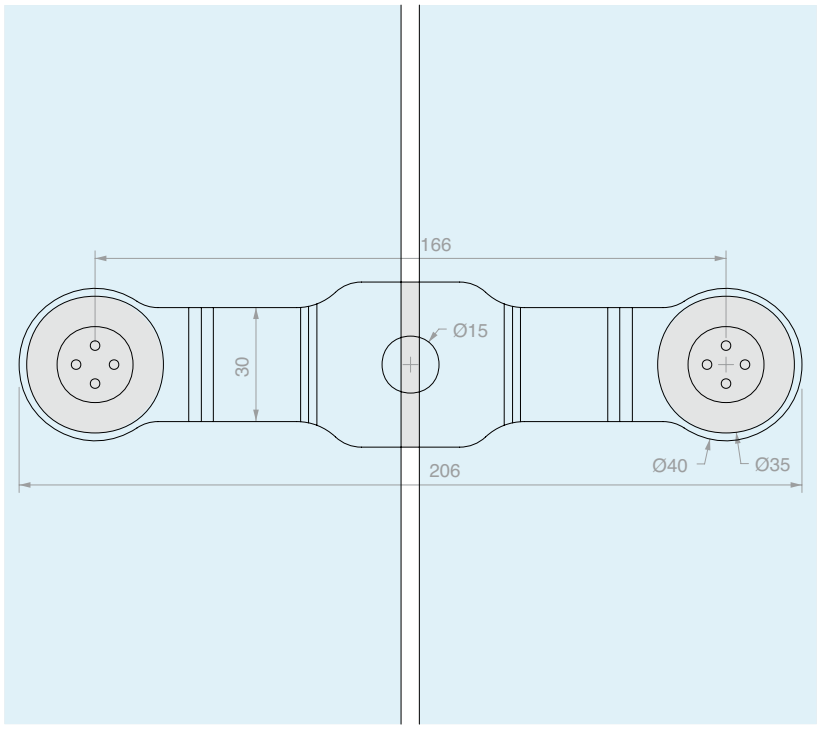

2-WAY IN-LINE CONNECTOR

Material: AISI 304 steel

Recommended hole size Ø18 mm.

Recommended tool for installation Art. UT250.

Finish: /8

Art.	Description	For glass thickness	Qty
ELEKTRA218	With FIXBORK1	From **8** to **12.7** mm	1 Pc
ELEK218	Bracket only	-	1 Pc

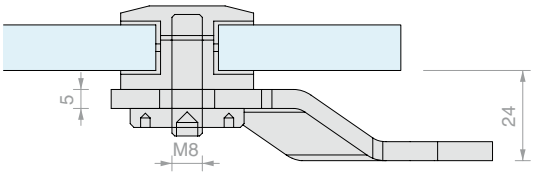

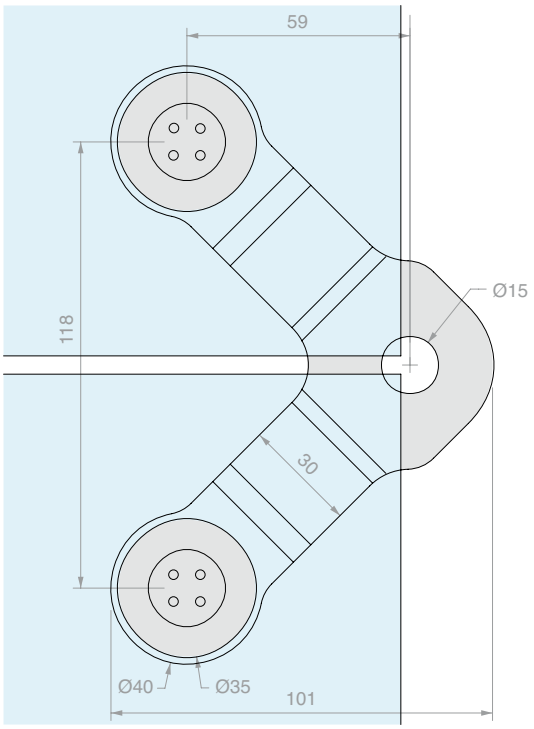

2-WAY 90° CONNECTOR

Material: AISI 304 steel
Recommended hole size Ø18 mm.
Recommended tool for installation Art. UT250.
Finish: /8

Art.	Description	For glass thickness	Qty
ELEKTRA290	With FIXBORK1	From **8** to **12.7** mm	1 Pc
ELEK290	Bracket only	-	1 Pc

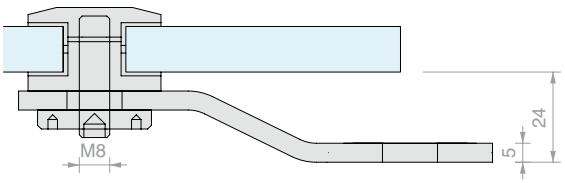

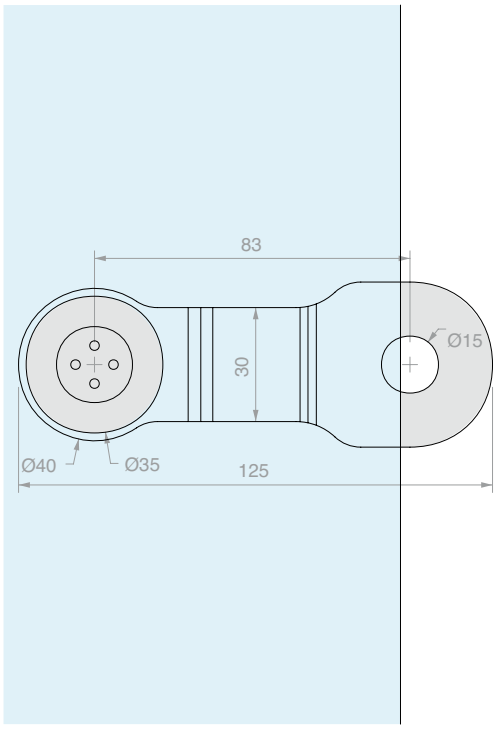

1-WAY CONNECTOR

Material: AISI 304 steel
Recommended hole size Ø18 mm.
Recommended tool for installation Art. UT250.
Finish: /8

Art.	Description	For glass thickness	Qty
ELEKTRA100	With FIXBORK1	From **8** to **12.7** mm	1 Pc
ELEK100	Bracket only	-	1 Pc

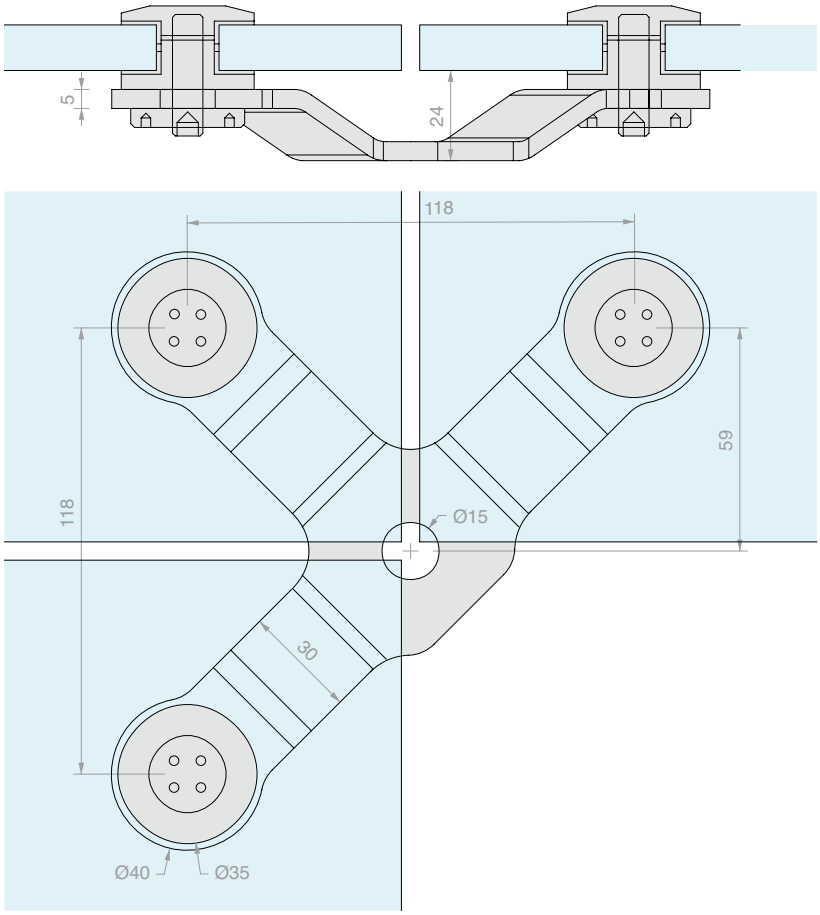

3-WAY CONNECTOR

Material: AISI 304 steel

Recommended hole size Ø18 mm.

Recommended tool for installation Art. UT250.

Finish: /8

Art.	Description	For glass thickness	Qty
ELEKTRA390	With FIXBORK1	From **8** to **12.7** mm	1 Pc
ELEK390	Bracket only	-	1 Pc

FIXING STUD

Material: AISI 304 steel

Supplied with M8 x 30 mm grub screw

Recommended glass hole size Ø18 mm

Recommended tool for installation Art. UT250.

Finish: /9

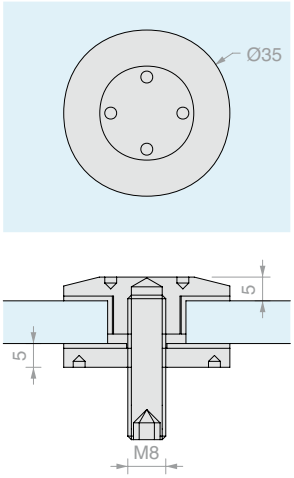

Art.	Qty
FIXBORK1	1 Pc

CLAMPING RING

Material: AISI 304 steel

Finish: /9

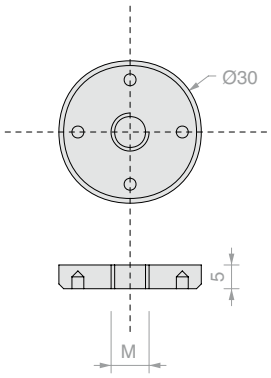

Art.	M	Qty
FIXGHIERA8	**M8**	1 Pc
FIXGHIERA10	**M10**	1 Pc

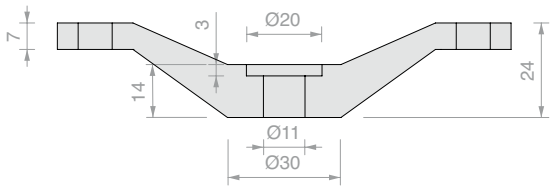

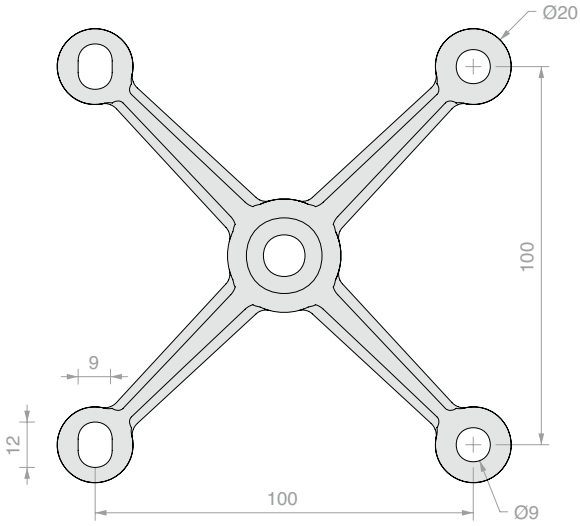

4-WAY CONNECTOR SPIDER HAND

Material: AISI 304 steel

Finish: /15

Art.	Qty
SPH100	1 Pc

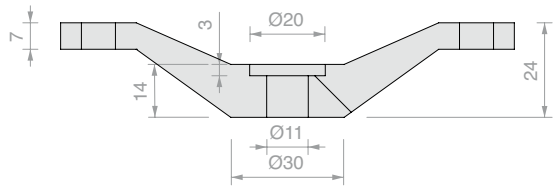

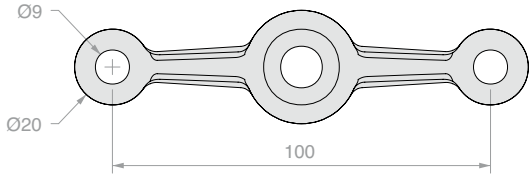

2-WAY IN-LINE CONNECTOR SPIDER HAND

Material: AISI 304 steel

Finish: /15

Art.	Qty
SPH102	1 Pc

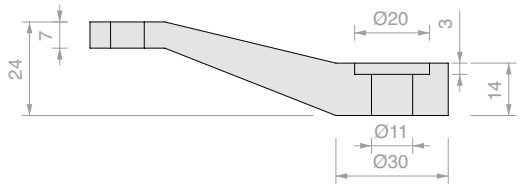

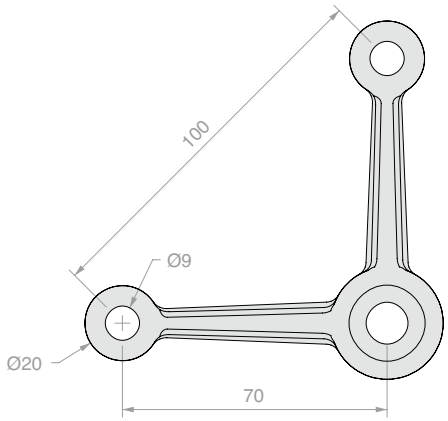

2-WAY 90° CONNECTOR SPIDER HAND

Material: AISI 304 steel

Finish: /15

Art.	Qty
SPH104	1 Pc

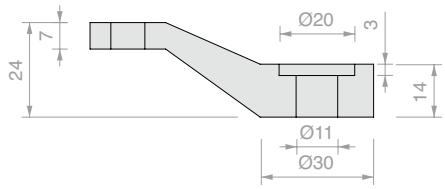

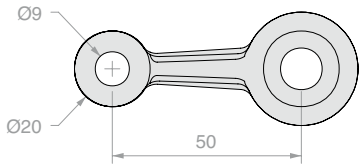

1-WAY IN-LINE CONNECTOR SPIDER HAND

Material: AISI 304 steel

Finish: /15

Art.	Qty
SPH106	1 Pc

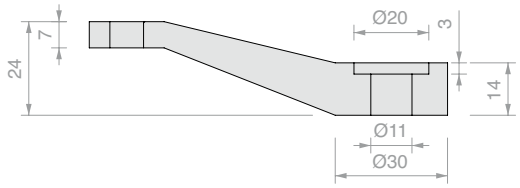

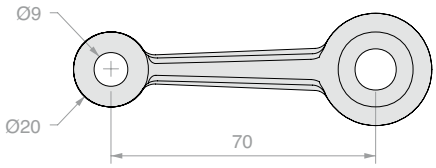

1-WAY 45° CONNECTOR SPIDER HAND

Material: AISI 304 steel

Finish: /15

Art.	Qty
SPH108	1 Pc

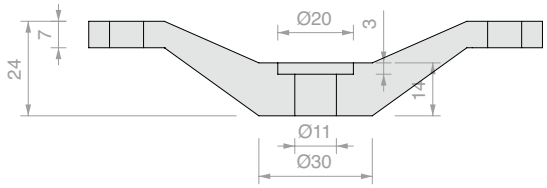

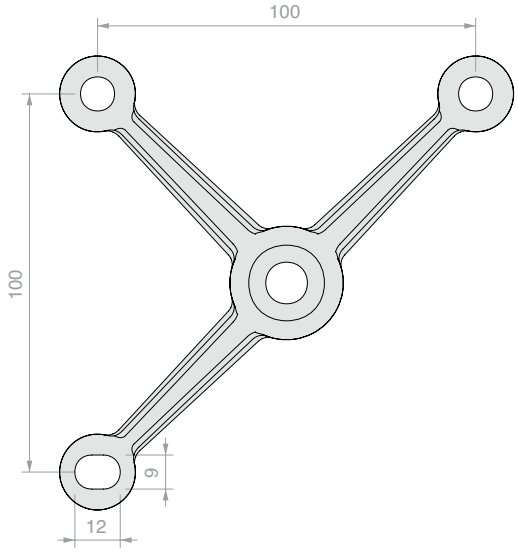

3-WAY CONNECTOR SPIDER HAND

Material: AISI 304 steel

Finish: /15

Art.	Qty
SPH110	1 Pc

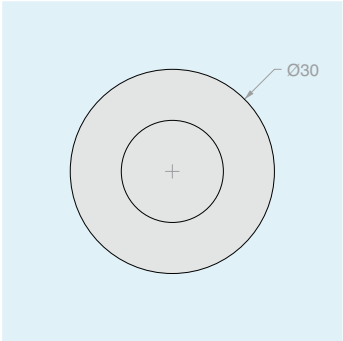

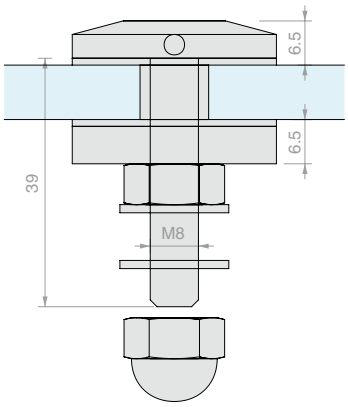

SPIDER HAND FIXING STUD

Material: AISI 304 steel

Recommended hole size Ø14 mm

Finish: /9

Art.	For glass	Qty
SPH114	From **10** to **13.5** mm	1 Pc

SPACER CONNECTOR

Material: AVP, AISI 304 steel
Spacer for connecting SPIDER HANDS
to a load-bearing structure
Finish: /9

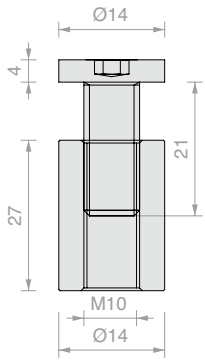

Art.	Qty
SPH112	1 Pc

PIN WRENCH FOR BLIND HOLES

Material: iron body with toughened steel pins

Art.	Description	Qty
UT250	Pin wrench with Ø2.4 mm pins	1 Pc
UTC250R	2 spare pins Ø2.4 mm	1 Pc

2-WAY IN-LINE PROFILE WITH VHB

Material: Polycarbonate

Colour: Transparent

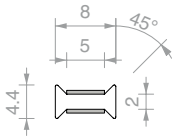

Art.	Length	For glass	Qty
PH50508	**3000** mm	**8** mm	1 Pc

2-WAY IN-LINE PROFILE WITH VHB

Material: Polycarbonate

Colour: Transparent

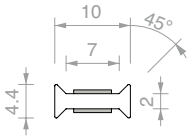

Art.	Length	For glass	Qty
PH50510	**3000** mm	**10** mm	1 Pc

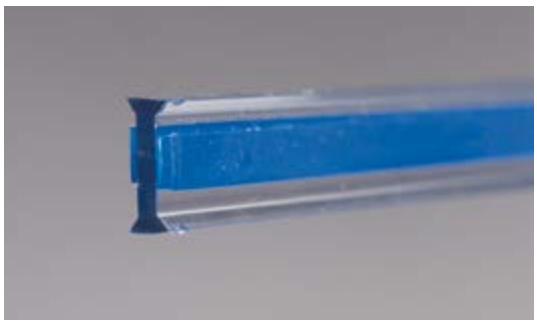

2-WAY IN-LINE PROFILE WITH VHB

Material: Polycarbonate

Colour: Transparent

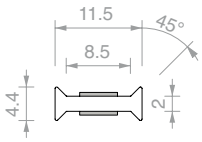

Art.	Length	For glass	Qty
PH50511	**3000** mm	**11.5** mm	1 Pc

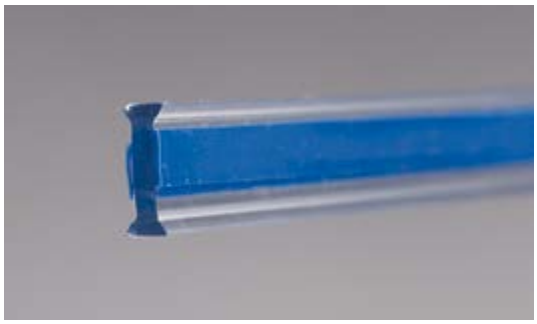

2-WAY IN-LINE PROFILE WITH VHB

Material: Polycarbonate

Colour: Transparent

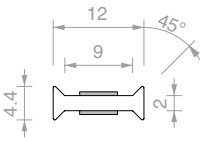

Art.	Length	For glass	Qty
PH50512	**3000** mm	**12** mm	1 Pc

2-WAY IN-LINE PROFILE WITH VHB

Material: Polycarbonate
Colour: Transparent

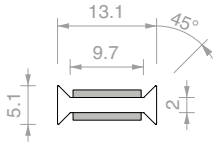

Art.	Length	For glass	Qty
PH9113	**3000** mm	**13.5** mm	1 Pc

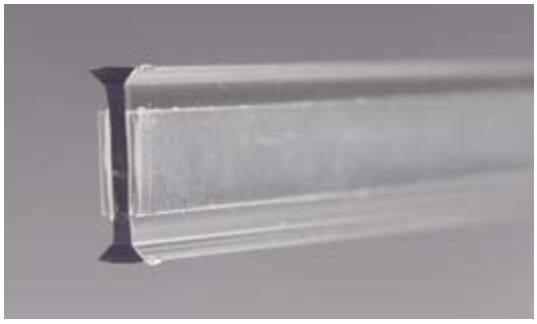

2-WAY IN-LINE PROFILE WITH VHB

Material: Polycarbonate
Colour: Transparent

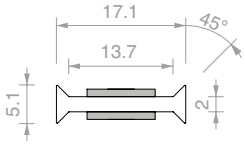

Art.	Length	For glass	Qty
PH9117	**3000** mm	**17.5** mm	1 Pc

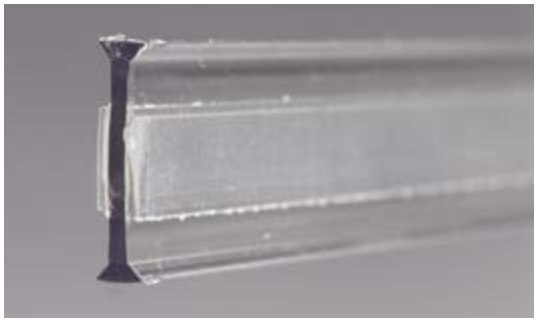

2-WAY IN-LINE PROFILE WITH VHB

Material: Polycarbonate
Colour: Transparent

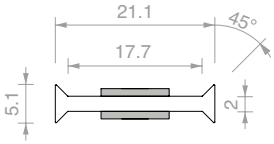

Art.	Length	For glass	Qty
PH9121	**3000** mm	**21.5** mm	1 Pc

2-WAY 90° PROFILE WITH VHB

Material: Polycarbonate
Colour: Transparent

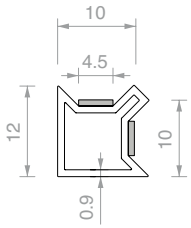

Art.	Length	For glass	Qty
PH2819	**3000** mm	**10** mm	1 Pc

2-WAY 90° PROFILE WITH VHB

Material: Polycarbonate
Colour: Transparent

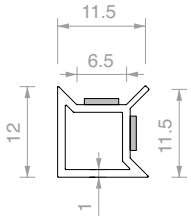

Art.	Length	For glass	Qty
PH2792	**3000** mm	**11.5** mm	1 Pc

2-WAY 90° PROFILE WITH VHB

Material: Polycarbonate
Colour: Transparent

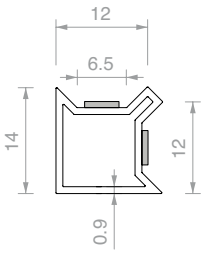

Art.	Length	For glass	Qty
PH2828	**3000** mm	**12** mm	1 Pc

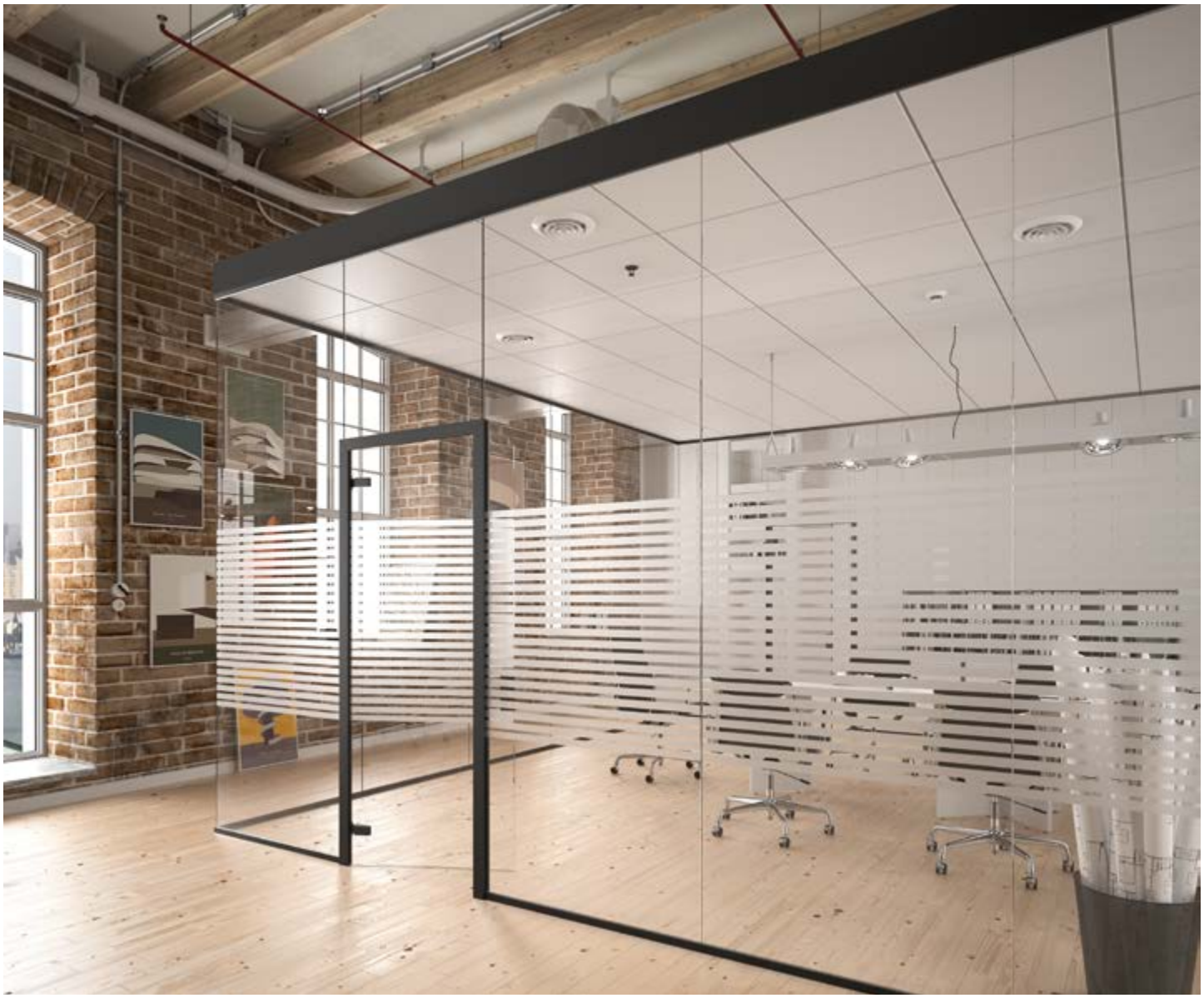

PROFIXDOOR 4ALSQ FULL KIT

Material: Aluminium
Finish: /6 /88 /97

Tested reduction noise from 31 to 33 dB

8/13.5	10/10.7 12/12.7	LgMAX 1000	LV+2*H max 5965	60
DOOR PANEL	FIXED PANES			

Kit comprising:

Art.	Description	Qty
PDKIT02 / **PDKIT05**	PROFIXDOOR door panel kit, fixed glass 10/10.7 mm PROFIXDOOR door panel kit, fixed glass 12/12.7 mm	1 Pc
CER4ALSQ	Squared hinge for door jambs	2 Pcs
AP2203BORH	Mechanical lock with hole for cylinder	1 Pc
APHANDSC	Squared closed handle	1 Pc
SERH17	Lock strike plate	1 Pc
LAVPRO2	Custom processing	1 Pc
CISA2227U / **CISA2227D**	European cylinder single key European cylinder different key	1 Pc

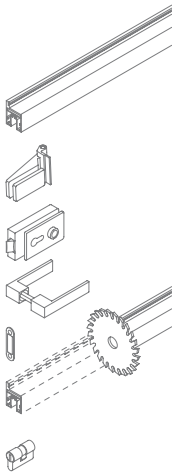

Art.	Description	Door panel	Fixed glass	Key	Qty
PD4SKIT10U	PROFIXDOOR full kit cut to size	From **8** to **13.5** mm	From **10** to **10.7** mm	Single key	1 Pc
PD4SKIT10D	PROFIXDOOR full kit cut to size	From **8** to **13.5** mm	From **10** to **10.7** mm	Different key	1 Pc
PD4SKIT10SC	PROFIXDOOR full kit cut to size	From **8** to **13.5** mm	From **10** to **10.7** mm	Without cylinder	1 Pc
PD4SKIT12U	PROFIXDOOR full kit cut to size	From **8** to **13.5** mm	From **12** to **12.7** mm	Single key	1 Pc
PD4SKIT12D	PROFIXDOOR full kit cut to size	From **8** to **13.5** mm	From **12** to **12.7** mm	Different key	1 Pc
PD4SKIT12SC	PROFIXDOOR full kit cut to size	From **8** to **13.5** mm	From **12** to **12.7** mm	Without cylinder	1 Pc

DIAGRAM AND RECCOMMENDED GLASS SIZING

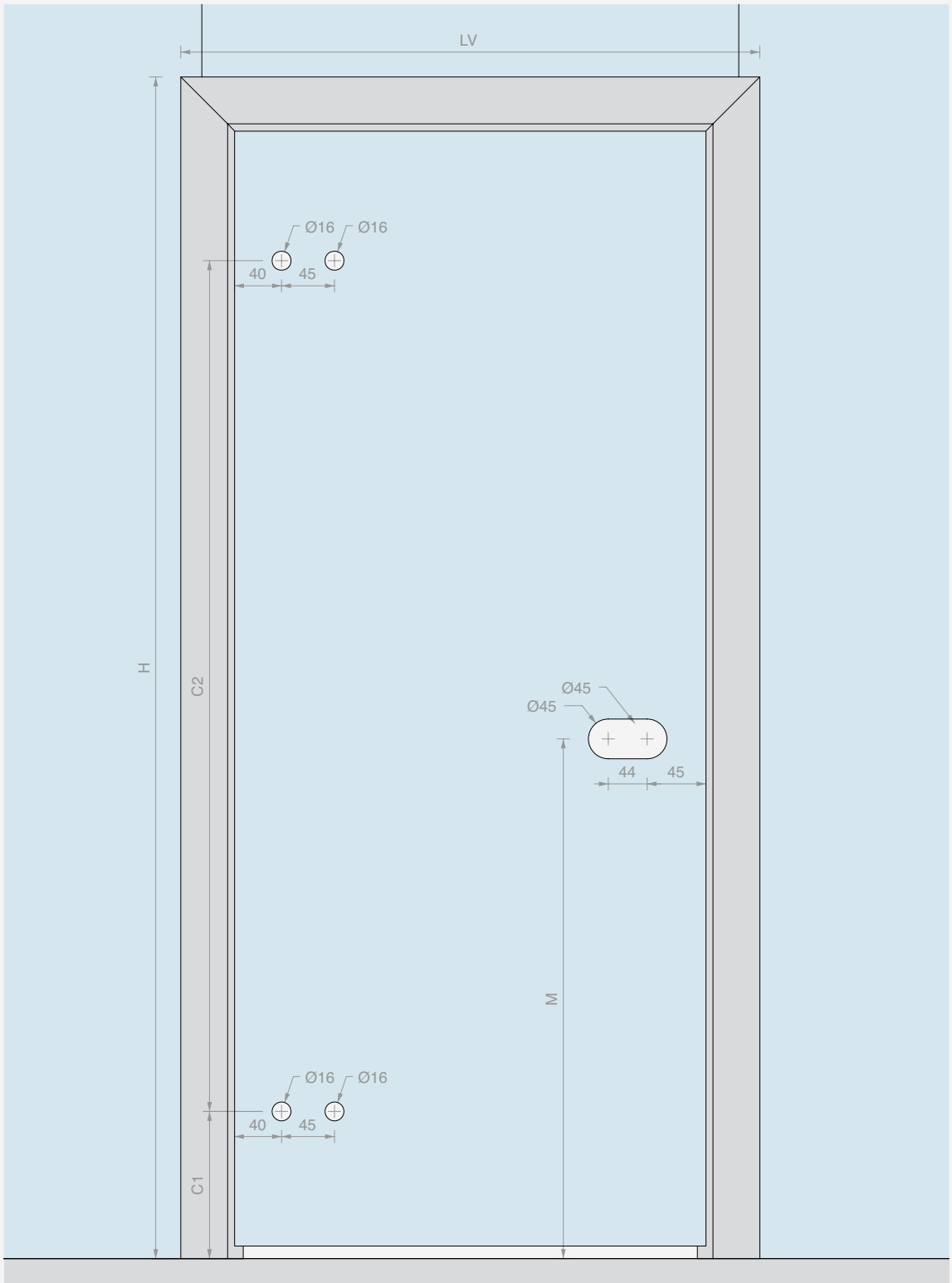

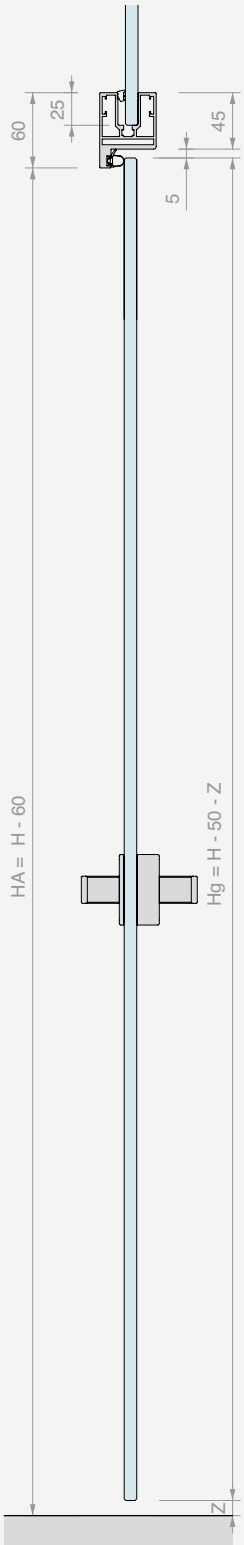

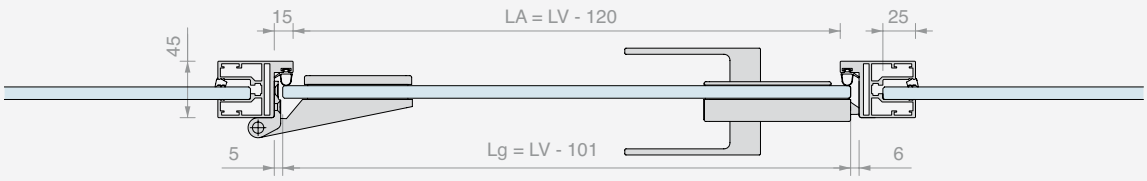

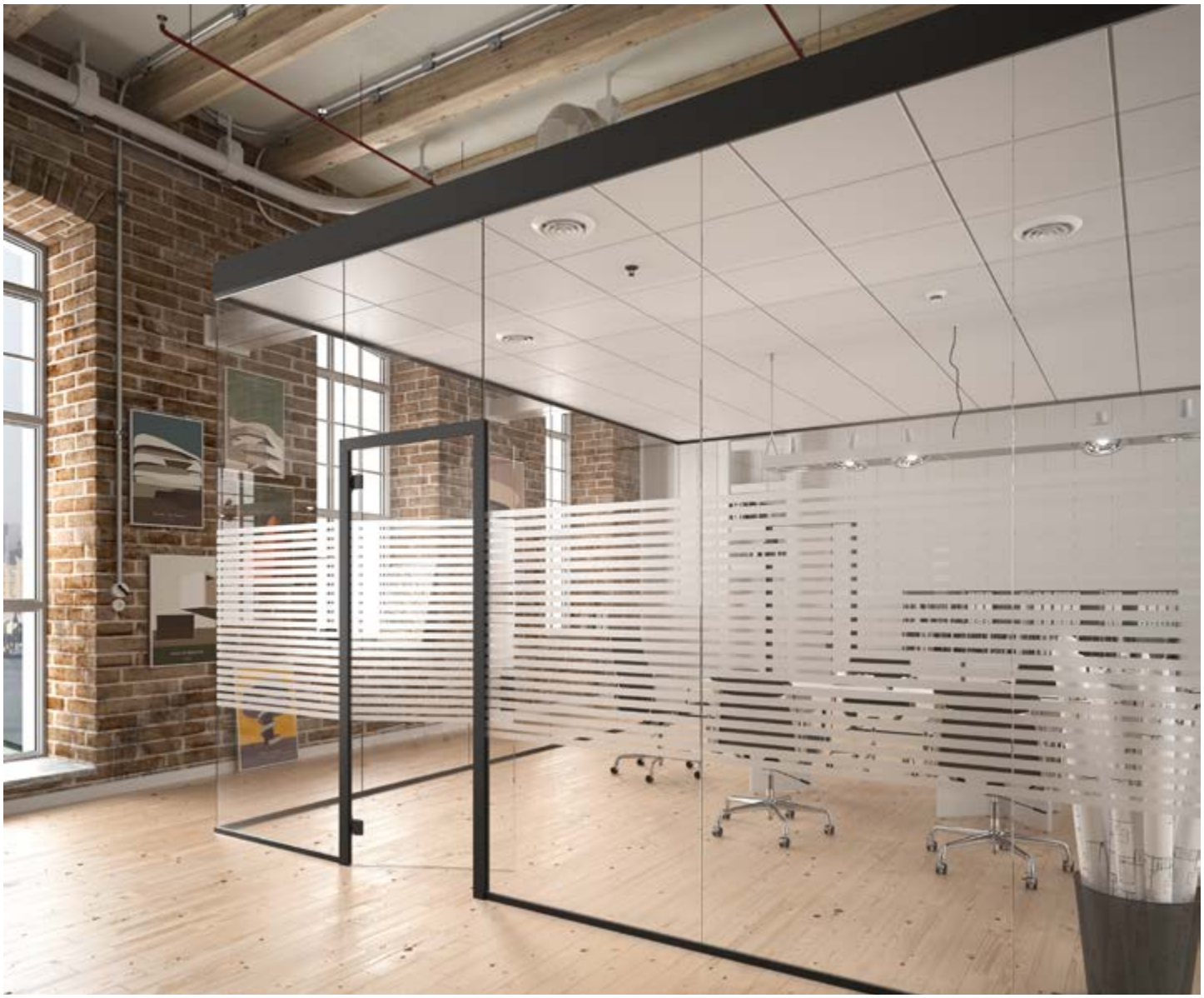

PROFIXDOOR 148ALSQ FULL KIT

Material: Aluminium
Finish: /6 /88 /97

Tested reduction noise from 31 to 33 dB

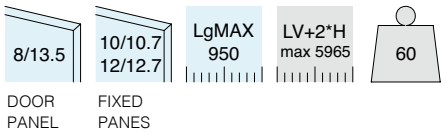

Kit comprising:

Art.	Description	Qty
PDKIT02 / **PDKIT05**	PROFIXDOOR door panel kit, fixed glass 10/10.7 mm PROFIXDOOR door panel kit, fixed glass 12/12.7 mm	1 Pc
CER148ALSQ	Squared hinge for door jambs	2 Pcs
AP2203BORH	Mechanical lock with hole for cylinder	1 Pc
APHANDSC	Squared closed handle	1 Pc
SERH17	Lock strike plate	1 Pc
LAVPRO2	Custom processing	1 Pc
CISA2227U / **CISA2227D**	European cylinder single key European cylinder different key	1 Pc

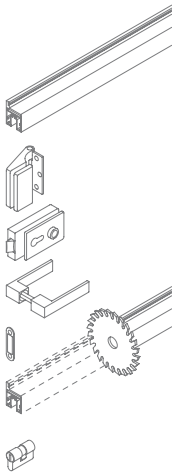

Art.	Description	Door panel	Fixed glass	Key	Qty
PD148SKIT10U	PROFIXDOOR full kit cut to size	From **8** to **13.5** mm	From **10** to **10.7** mm	Single key	1 Pc
PD148SKIT10D	PROFIXDOOR full kit cut to size	From **8** to **13.5** mm	From **10** to **10.7** mm	Different key	1 Pc
PD148SKIT10SC	PROFIXDOOR full kit cut to size	From **8** to **13.5** mm	From **10** to **10.7** mm	Without cylinder	1 Pc
PD148SKIT12U	PROFIXDOOR full kit cut to size	From **8** to **13.5** mm	From **12** to **12.7** mm	Single key	1 Pc
PD148SKIT12D	PROFIXDOOR full kit cut to size	From **8** to **13.5** mm	From **12** to **12.7** mm	Different key	1 Pc
PD148SKIT12SC	PROFIXDOOR full kit cut to size	From **8** to **13.5** mm	From **12** to **12.7** mm	Without cylinder	1 Pc

DIAGRAM AND RECCOMMENDED GLASS SIZING

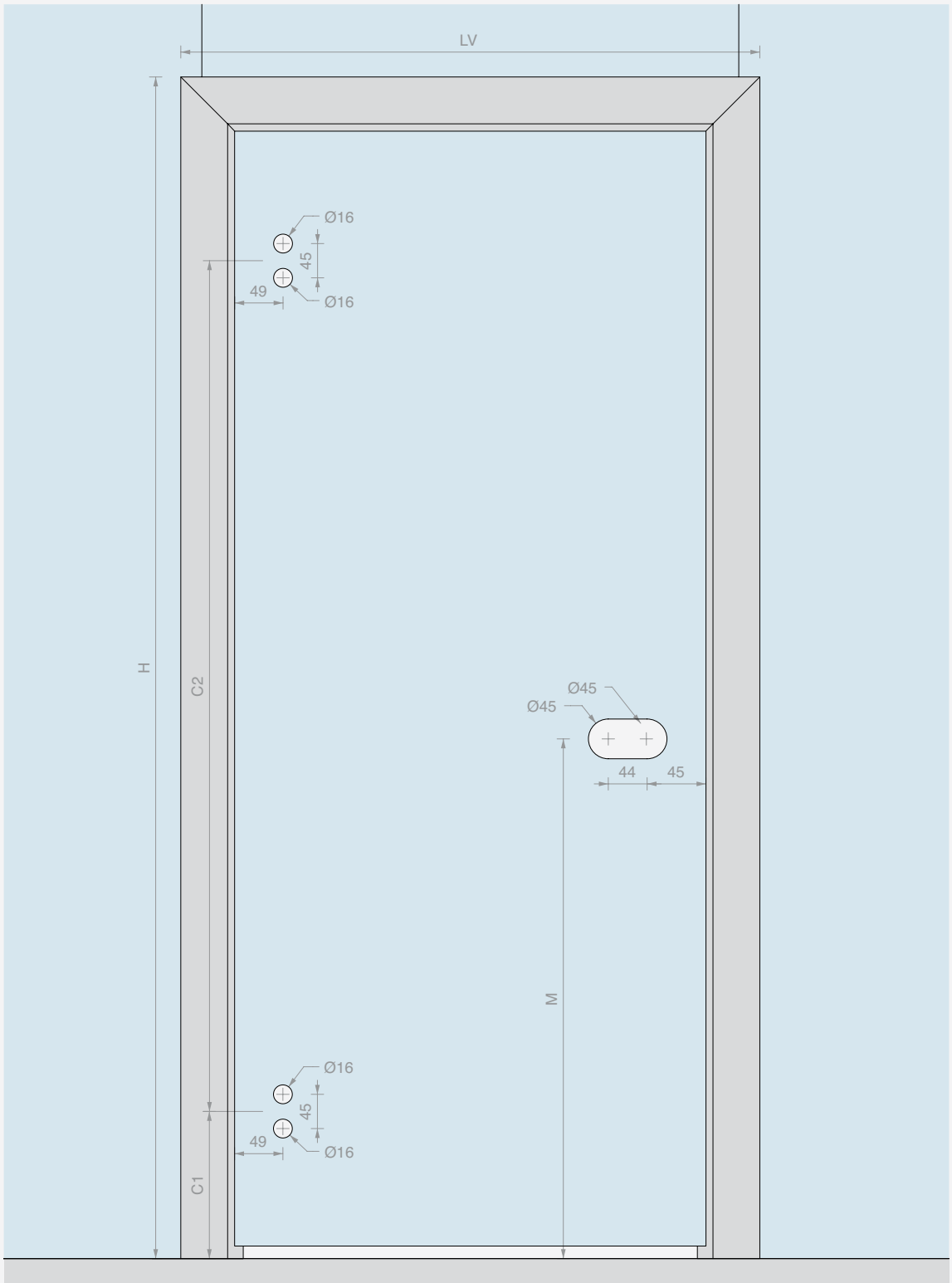

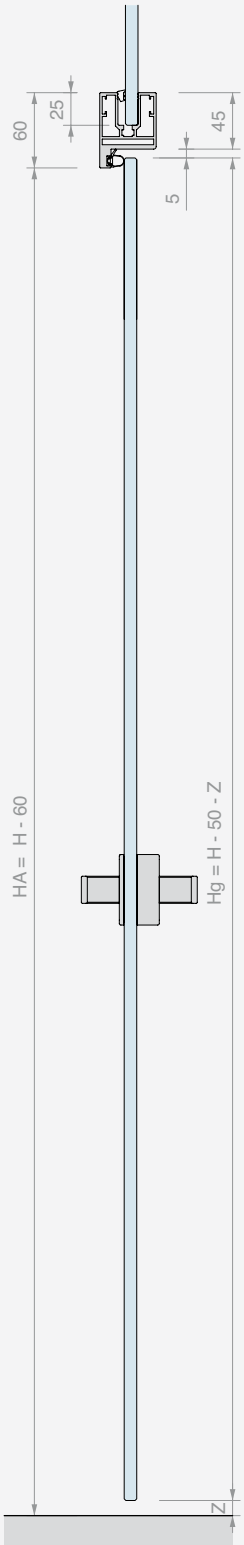

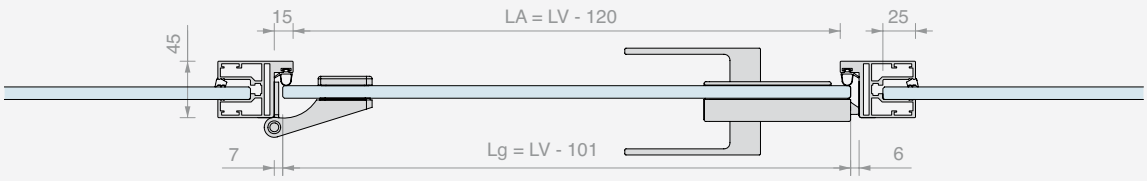

PROFIXDOOR 4AL FULL KIT

Material: Aluminium
Finish: /6 /88 /97

Tested reduction noise from 31 to 33 dB

8/13.5	10/10.7 12/12.7	LgMAX 1000	LV+2*H max 5965	60
DOOR PANEL	FIXED PANES			

Kit comprising:

Art.	Description	Qty
PDKIT02 / **PDKIT05**	PROFIXDOOR door panel kit, fixed glass 10/10.7 mm PROFIXDOOR door panel kit, fixed glass 12/12.7 mm	1 Pc
CER4AL	Rounded hinge for door jambs	2 Pcs
AP1203BORH	Mechanical lock with hole for cylinder	1 Pc
APHANDRC	Rounded closed handle	1 Pc
SERH17	Lock strike plate	1 Pc
LAVPRO2	Custom processing	1 Pc
CISA2227U / **CISA2227D**	European cylinder single key European cylinder different key	1 Pc

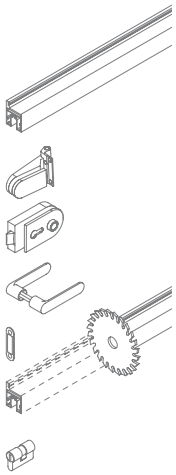

Art.	Description	Door panel	Fixed glass	Key	Qty
PD4RKIT10U	PROFIXDOOR full kit cut to size	From **8** to **13.5** mm	From **10** to **10.7** mm	Single key	1 Pc
PD4RKIT10D	PROFIXDOOR full kit cut to size	From **8** to **13.5** mm	From **10** to **10.7** mm	Different key	1 Pc
PD4RKIT10SC	PROFIXDOOR full kit cut to size	From **8** to **13.5** mm	From **10** to **10.7** mm	Without cylinder	1 Pc
PD4RKIT12U	PROFIXDOOR full kit cut to size	From **8** to **13.5** mm	From **12** to **12.7** mm	Single key	1 Pc
PD4RKIT12D	PROFIXDOOR full kit cut to size	From **8** to **13.5** mm	From **12** to **12.7** mm	Different key	1 Pc
PD4RKIT12SC	PROFIXDOOR full kit cut to size	From **8** to **13.5** mm	From **12** to **12.7** mm	Without cylinder	1 Pc

DIAGRAM AND RECCOMMENDED GLASS SIZING

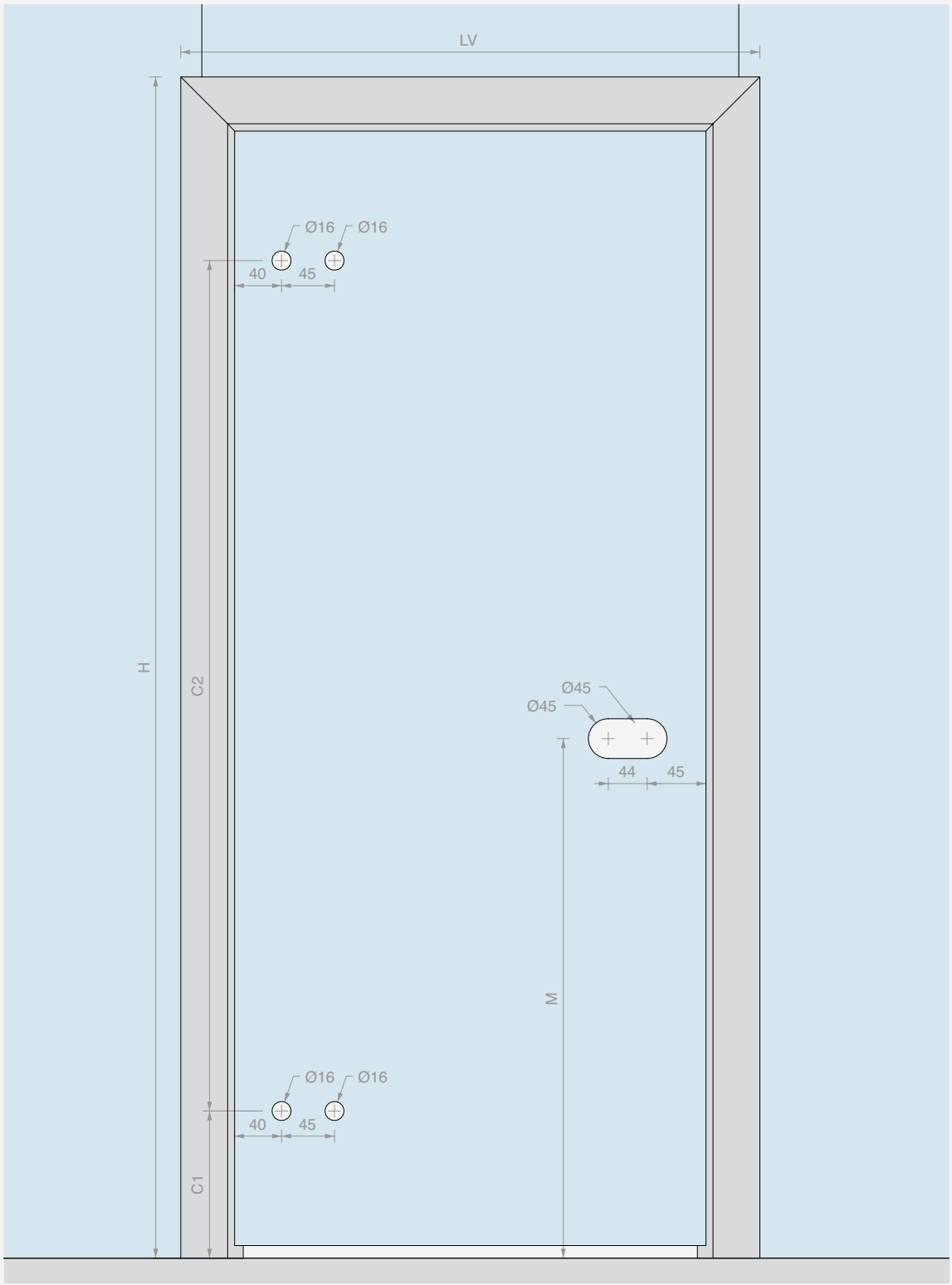

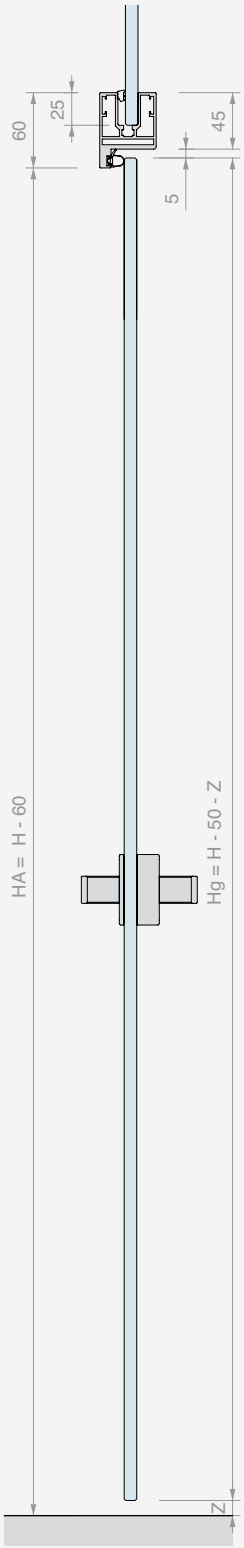

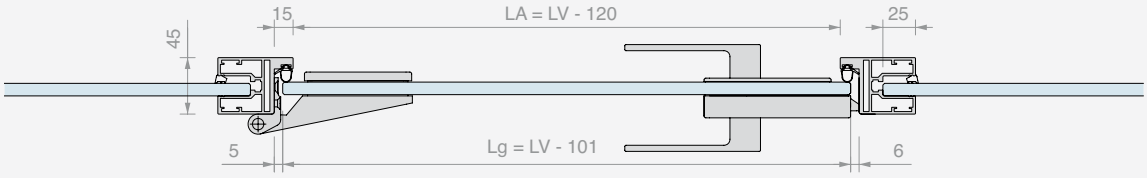

PROFIXDOOR 148AL FULL KIT

Material: Aluminium
Finish: /6 /88 /97

Tested reduction noise from 31 to 33 dB

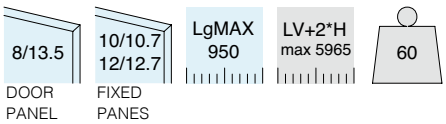

Kit comprising:

Art.	Description	Qty
PDKIT02 / **PDKIT05**	PROFIXDOOR door panel kit, fixed glass 10/10.7 mm PROFIXDOOR door panel kit, fixed glass 12/12.7 mm	1 Pc
CER148AL	Rounded hinge for door jambs	2 Pcs
AP1203BORH	Mechanical lock with hole for cylinder	1 Pc
APHANDRC	Rounded closed handle	1 Pc
SERH17	Lock strike plate	1 Pc
LAVPRO2	Custom processing	1 Pc
CISA2227U / **CISA2227D**	European cylinder single key European cylinder different key	1 Pc

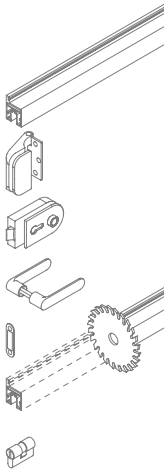

Art.	Description	Door panel	Fixed glass	Key	Qty
PD148RKIT10U	PROFIXDOOR full kit cut to size	From **8** to **13.5** mm	From **10** to **10.7** mm	Single key	1 Pc
PD148RKIT10D	PROFIXDOOR full kit cut to size	From **8** to **13.5** mm	From **10** to **10.7** mm	Different key	1 Pc
PD148RKIT10SC	PROFIXDOOR full kit cut to size	From **8** to **13.5** mm	From **10** to **10.7** mm	Without cylinder	1 Pc
PD148RKIT12U	PROFIXDOOR full kit cut to size	From **8** to **13.5** mm	From **12** to **12.7** mm	Single key	1 Pc
PD148RKIT12D	PROFIXDOOR full kit cut to size	From **8** to **13.5** mm	From **12** to **12.7** mm	Different key	1 Pc
PD148RKIT12SC	PROFIXDOOR full kit cut to size	From **8** to **13.5** mm	From **12** to **12.7** mm	Without cylinder	1 Pc

DIAGRAM AND RECCOMMENDED GLASS SIZING

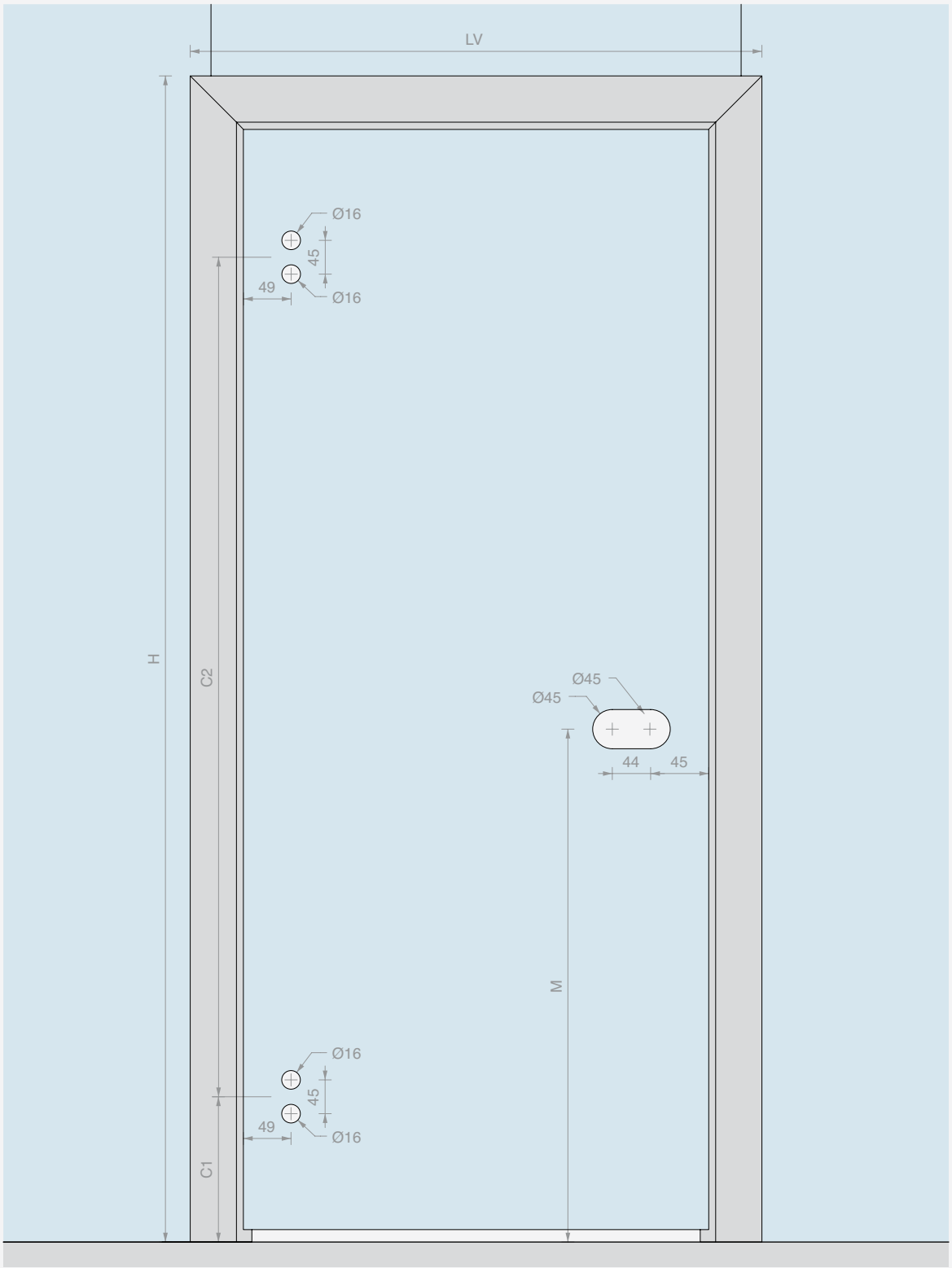

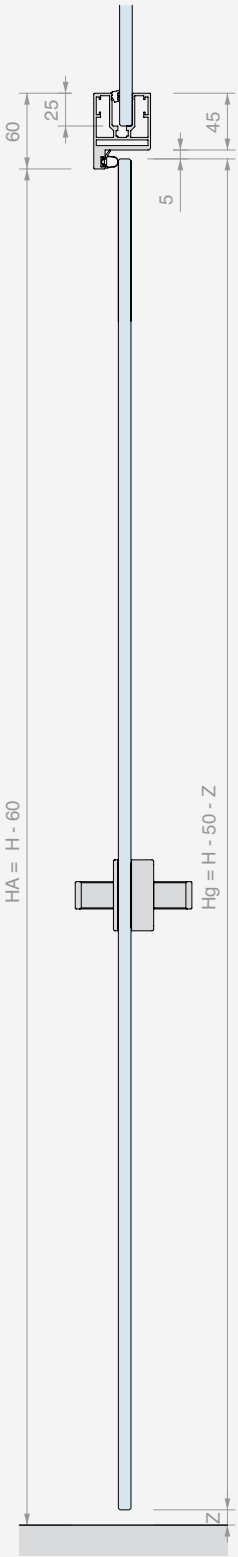

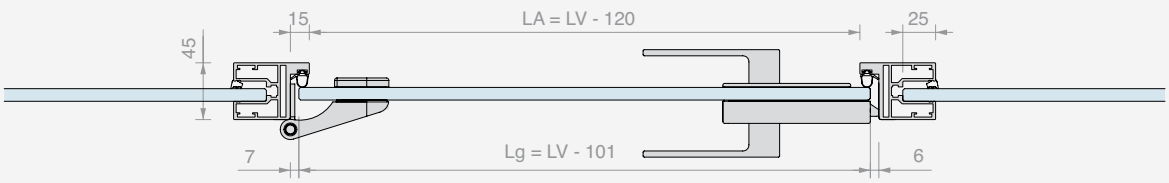

FORM TO ORDER CUSTOM CUT-TO-SIZE PROFIXDOOR

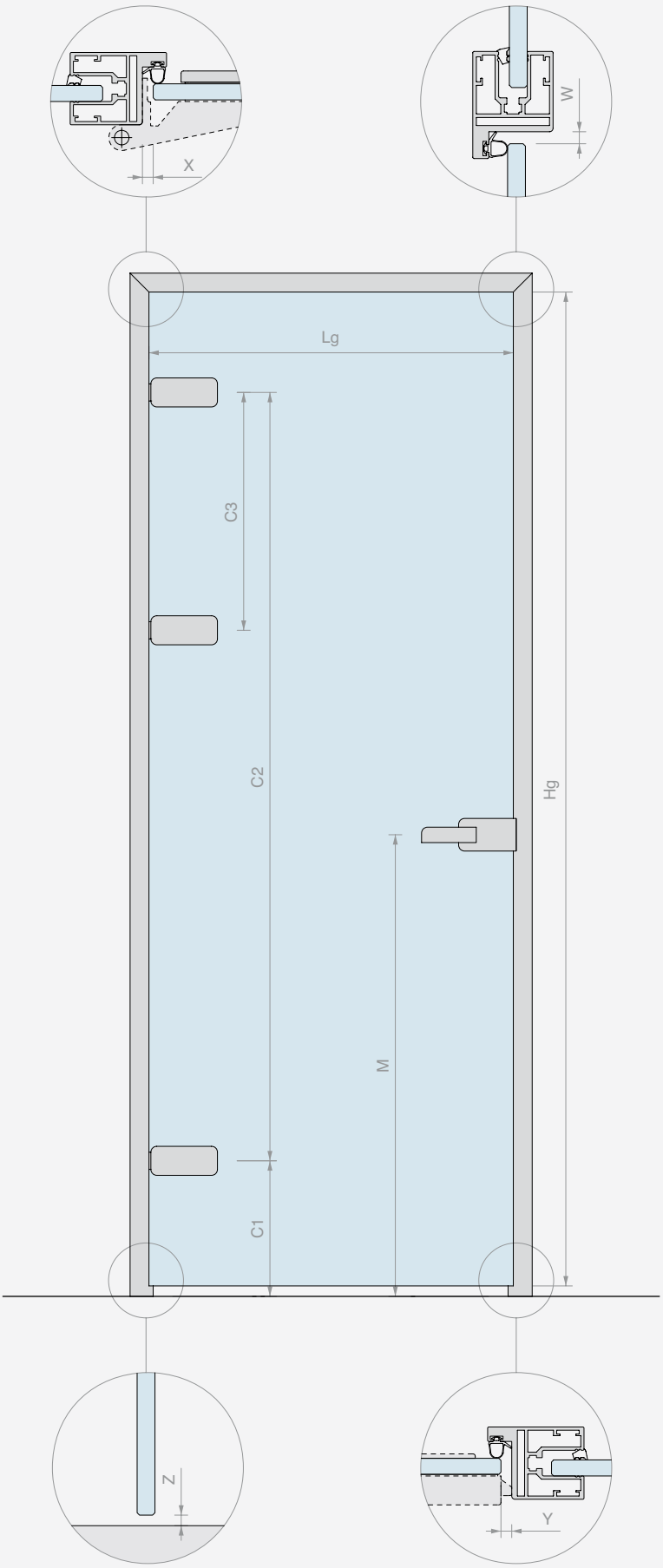

PROFILE PROCESSING

DOOR PANEL DIMENSIONS

Width =_____ mm

Height =_____ mm

DOOR PANEL THICKNESS

_____ mm

FIXED GLASS THICKNESS

_____ mm

OTHER DIMENSIONS

☐ Values as per your suggestion

X = _____ mm

Z = _____ mm

Y = _____ mm

W = _____ mm

C1 = _____ mm

C2 = _____ mm

C3 = _____ mm (where present)

M = _____ mm

☐ Left opening

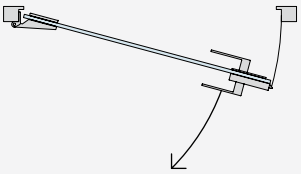

☐ Right opening

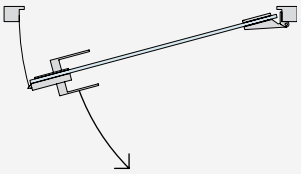

FINISH AND QUANTITY OF THE FULL KIT

☐ /6 BLACK ALUMINIUM

☐ /88 SATIN STAINLESS STEEL EFFECT ALUMINIUM

☐ /97 MATT ALUMINIUM

☐ Other _____

Qty = _____ Pcs

ACCESSORIES

HINGES

Qty = ___ Pcs

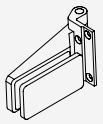

☐ CER4ALSQ
Squared hinge for door jambs

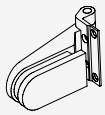

☐ CER4AL
Rounded hinge for door jambs

☐ FA50
Squared hinge for narrow door jambs

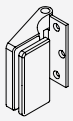

☐ CER148ALSQ
Squared hinge for door jambs

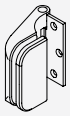

☐ CER148AL
Rounded hinge for door jambs

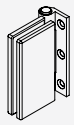

☐ FA100
Rectangular hinge for narrow door jambs

(attach technical data sheet)

☐ OTHER

LOCK

Qty = ___ Pcs

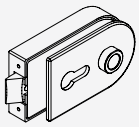

☐ AP1203BORH
Mechanical lock with hole for cylinder

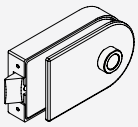

☐ AP1203BOST
Mechanical lock without hole for cylinder

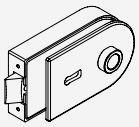

☐ AP1203BOPA
Mechanical lock with patented key

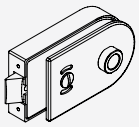

☐ AP1203BOKS
Mechanical lock free/occupied

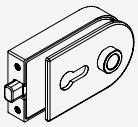

☐ AP1203BOMG
Magnetic lock with hole for cylinder

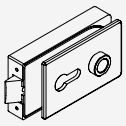

☐ AP2203BORH
Mechanical lock with hole for cylinder

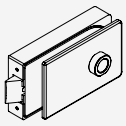

☐ AP2203BOST
Mechanical lock without hole for cylinder

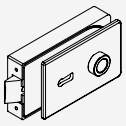

☐ AP2203BOPA
Mechanical lock with patented key

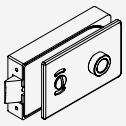

☐ AP2203BOKS
Mechanical lock free/occupied

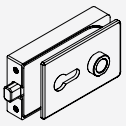

☐ AP2203BOMG
Magnetic lock with hole for cylinder

(attach technical data sheet)

☐ OTHER

HANDLE

Qty = ___ Pcs

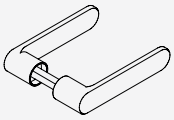

☐ APHANDRC
Rounded closed handle

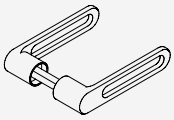

☐ APHANDRH
Rounded open handle

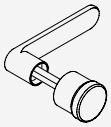

☐ APHAFKRC
Rounded closed handle, with fixed door knob

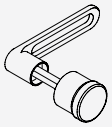

☐ APHAFKRH
Rounded open handle, with fixed door knob

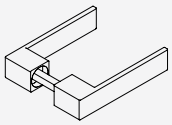

☐ APHANDSC
Squared closed handle

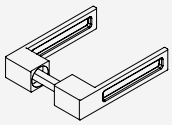

☐ APHANDSH
Squared open handle

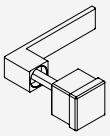

☐ APHAFKSC
Squared closed handle, with fixed door knob

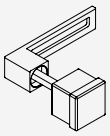

☐ APHAFKSH
Squared open handle, with fixed door knob

CYLINDER (if required)

Qty = ___ Pcs

☐ CISA2227D
Cylinder different key

☐ CISA2227U
Cylinder single key

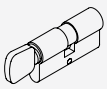

☐ S1217U
Cylinder, different key with door knob

STRIKE PLATE

Qty = ___ Pcs

☐ SERH17
Strike plate for mechanical latch

☐ APROIN17M
Strike plate for magnetic latch

(attach technical data sheet)

☐ OTHER

PROFIXDOOR DOOR PANEL KIT

Material: Aluminium
Finish: /6 /88 /97

Tested reduction noise from 31 to 33 dB

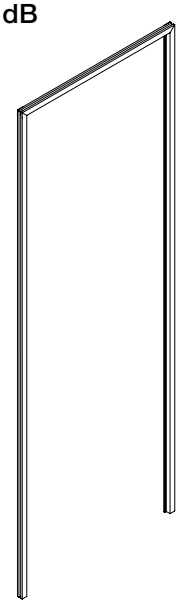

DIAGRAM AND RECCOMMENDED GLASS SIZING

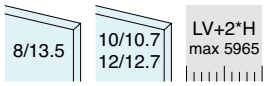

DOOR PANEL — FIXED PANES

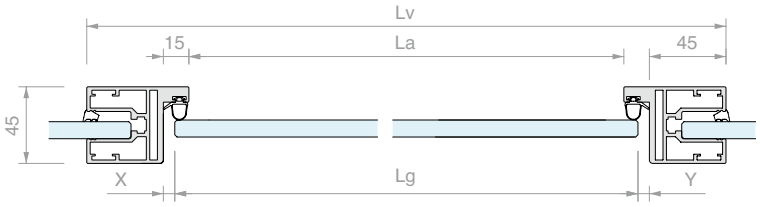

Kit comprising:

Art.	Description	Qty
PFDOOR66	Profile for door panels and fixed glass	1 Pc
PD001	4 joining brackets	1 Pc
PD002	4 alignment brackets	1 Pc
PD8A	Grey door striker gasket	6 m
PFDOORCUT	Cut-to-size	1 Pc
GTUP6 / **GTUP4**	Glass holder seal for 10/10.7 mm Glass holder seal for 12/12.7 mm	6 m

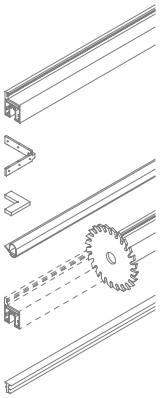

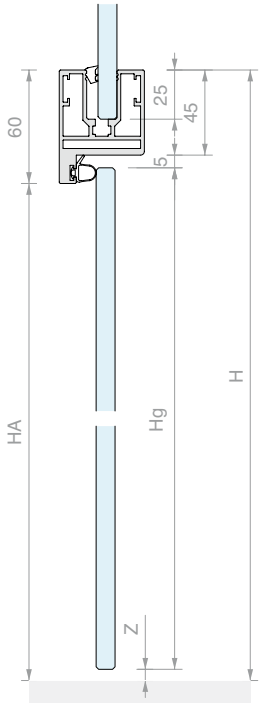

FORMULAS

Lg = LV - (90 + X + Y)
Hg = H - 50 - Z

OTHER DIMENSIONS

LA = LV - 120
HA = H - 60

Dimensions X and Y depend on the hinges and lock used

Art.	Description	Door panels	Fixed glass	Qty
PDKIT02	PROFIXDOOR cut-to-size door panel kit	From **8** to **13.5** mm	From **10** to **10.7** mm	1 Pc
PDKIT05	PROFIXDOOR cut-to-size door panel kit	From **8** to **13.5** mm	From **12** to **12.7** mm	1 Pc

PROFIXDOOR PROFILE FOR DOORS AND FIXED GLASS

Material: Aluminium

GTUP seal to be ordered separately

Finish: /6 /10 /88 /97

Tested reduction noise from 31 to 33 dB

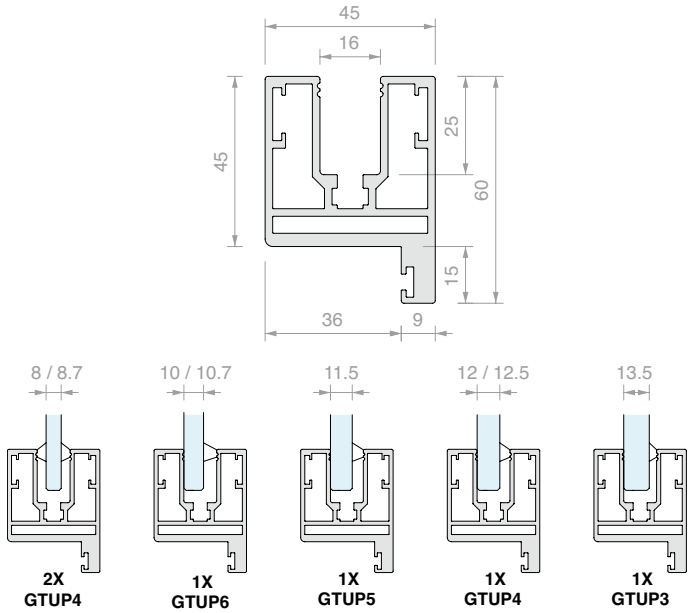

Art.	Length	Door panels	Fixed glass	Qty
PFDOOR6615	**1497** mm	From **8** to **13.5** mm	From **8** to **13.5** mm	1 Pc
PFDOOR6630	**2998** mm	From **8** to **13.5** mm	From **8** to **13.5** mm	1 Pc
PFDOOR66	**6000** mm	From **8** to **13.5** mm	From **8** to **13.5** mm	1 Pc

PROFIXDOOR PROFILE FOR DOORS AND FIXED GLASS

Material: Aluminium

GTUP seal to be ordered separately

Finish: /6 /10 /88 /97

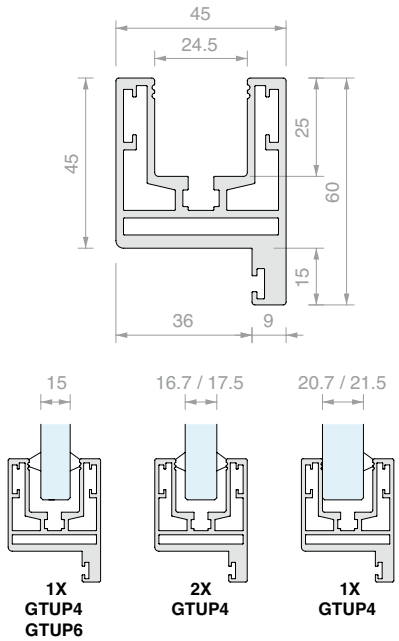

Art.	Length	Door panels	Fixed glass	Qty
PFDOOR81015	**1497** mm	From **8** to **13.5** mm	From **15** to **21.5** mm	1 Pc
PFDOOR81030	**2998** mm	From **8** to **13.5** mm	From **15** to **21.5** mm	1 Pc
PFDOOR810	**6000** mm	From **8** to **13.5** mm	From **15** to **21.5** mm	1 Pc

DOOR STRIKER GASKET

Material: Silicone

Finish: /6 /97

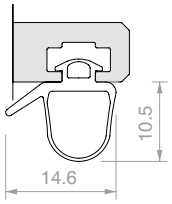

Art.	For glass	Qty
PD8A	From **8** to **10.76** mm	1 m

DOOR STRIKER GASKET

Material: PVC

Finish: /6 /97

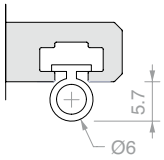

Art.	For glass	Qty
PD12	From **11.52** to **13.52** mm	1 m

4 X 90° PROFILE JOINING BRACKETS

Material: AISI 304 steel

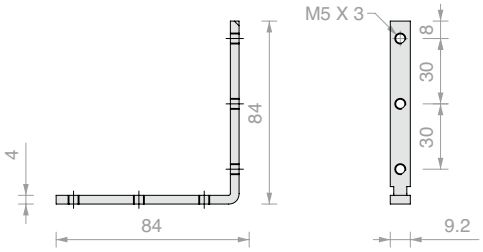

Art.	Qty
PD001	1 Pc

4 X 90° PROFILE ALIGNMENT BRACKETS

Material: POM

Finish: /6

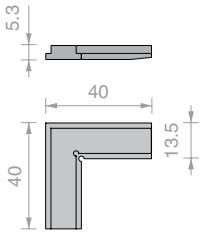

Art.	Qty
PD002	1 Pc

WALL FIXING KIT PFDOOR66

Material: Aluminium

Cannot be used in situations with walls on all 3 sides

Finish: /97

TYPE OF APPLICATIONS:

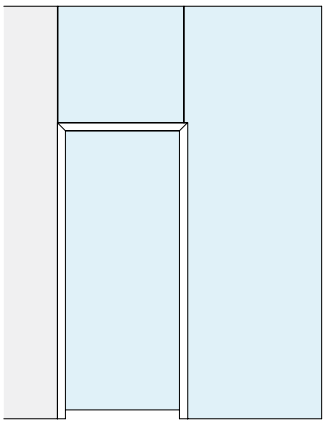

1 x PDMUR66

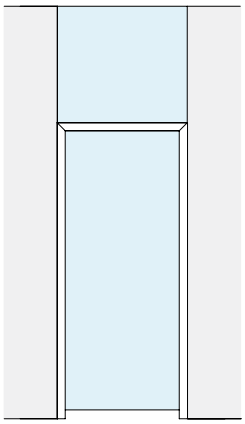

2 x PDMUR66

Art.	Qty
PDMUR66	1 Pc

CALCULATION AND CUT AT 45° PROFIXDOOR

Art.	Qty
PFDOORCUT	1 Pc

PROCESSING ON PROFIXDOOR

We advise completing the forms on pages 426/427

also available in editable format online on our website

Art.	Processing	Qty
LAVCER	for 2 Logli hinges	1 Pc
LAVSER	for Logli strike plate	1 Pc
LAVPRO2	for 2 Logli hinges and 1 strike plate	1 Pc
LAVPRO3	for 3 Logli hinges and 1 strike plate	1 Pc

IMBOTTE L-SHAPED 50 FULL KIT

Material: Aluminium
Finish: /6 /97

Kit comprising:

Art.	Description	Qty
IMB25KIT	IMBOTTE L-SHAPED door panel kit	1 Pc
FA50	Squared hinge for narrow door jambs	2 Pcs
AP2203BORH	Mechanical lock with hole for cylinder	1 Pc
APHANDSC	Squared closed handle	1 Pc
SERH17	Lock strike plate	1 Pc
LAVPRO2	Custom processing	1 Pc
CISA2227U / **CISA2227D**	European cylinder single key / European cylinder different key	1 Pc

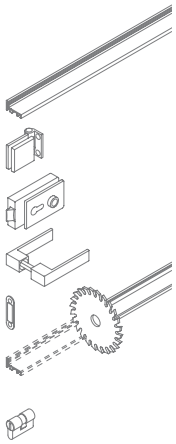

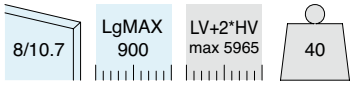

Art.	Description	For glass	Key	Qty
IMB2550SKITU	IMBOTTE L-SHAPED 50 full kit cut to size	From **8** to **10.7** mm	Single key	1 Pc
IMB2550SKITD	IMBOTTE L-SHAPED 50 full kit cut to size	From **8** to **10.7** mm	Different key	1 Pc
IMB2550SKITSC	IMBOTTE L-SHAPED 50 full kit cut to size	From **8** to **10.7** mm	Without cylinder	1 Pc

DIAGRAM AND RECCOMMENDED GLASS SIZING

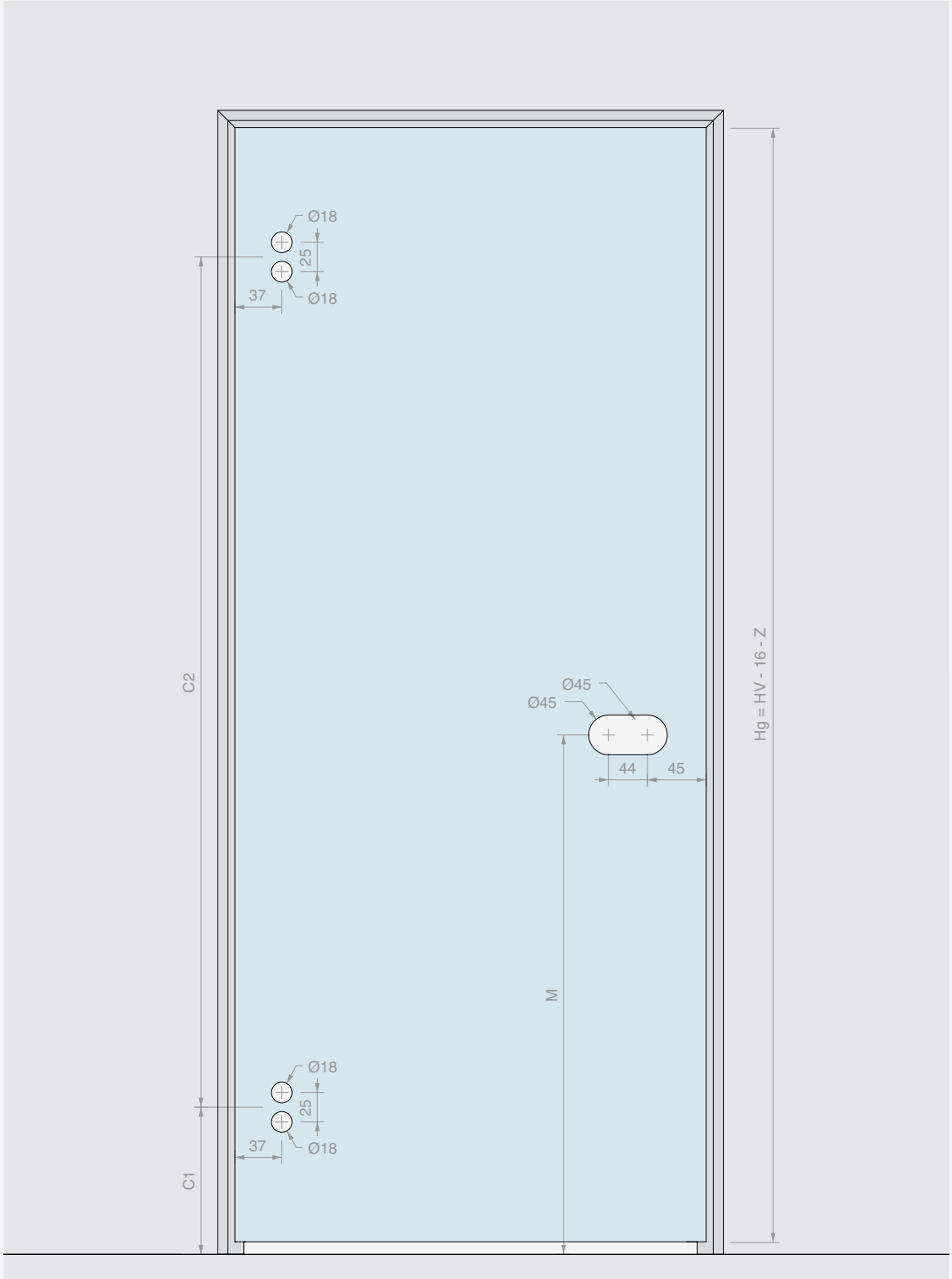

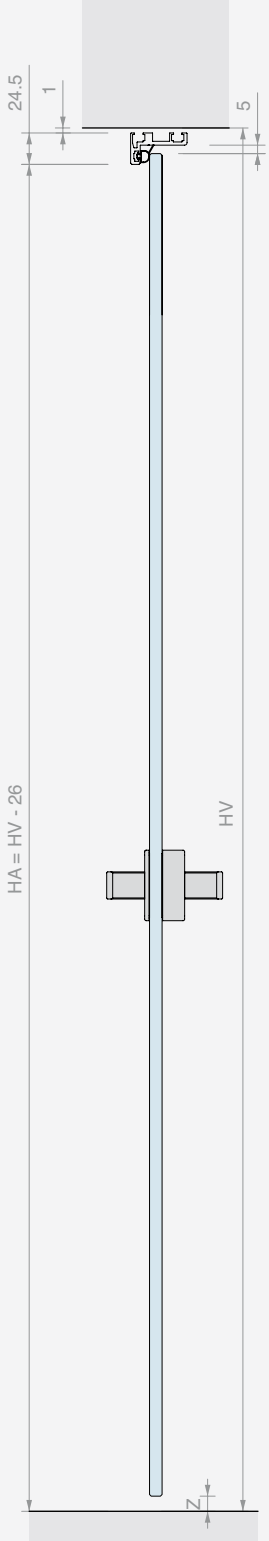

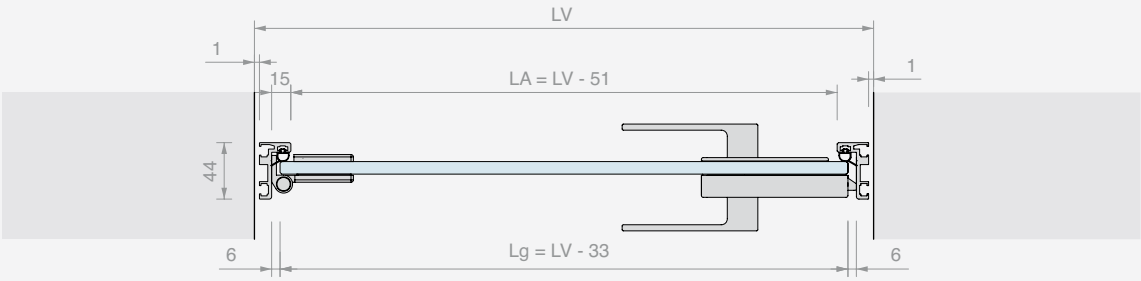

FORM TO ORDER CUSTOM IMBOTTE L-SHAPED

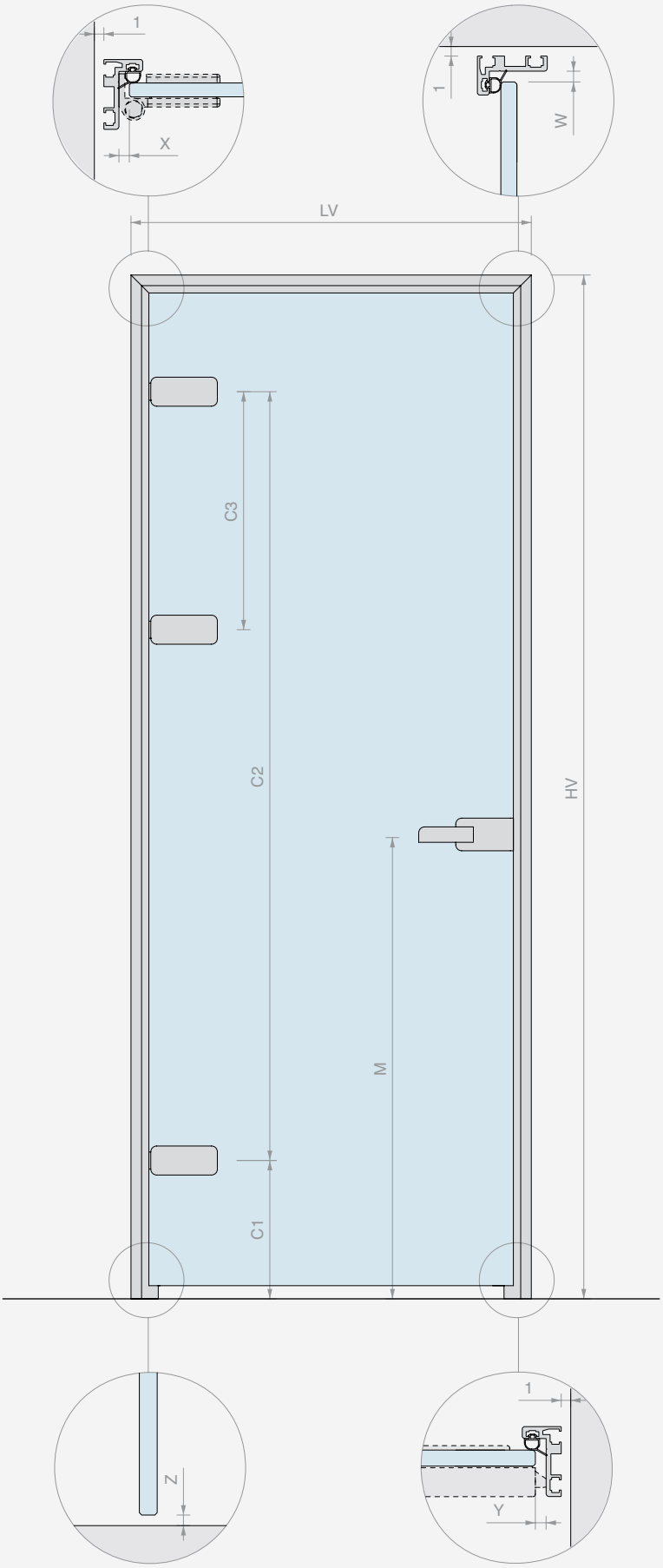

PROFILE PROCESSING

DOOR OPENING SIZE

LV = _____ mm

HV = _____ mm

DOOR PANEL THICKNESS

_____ mm

OTHER DIMENSIONS

Values as per your suggestion

X = _____ mm

Z = _____ mm

Y = _____ mm

W = _____ mm

C1 = _____ mm

C2 = _____ mm

C3 = _____ mm (where present)

M = _____ mm

☐ Left opening

☐ Right opening

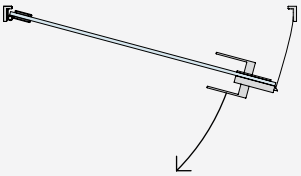

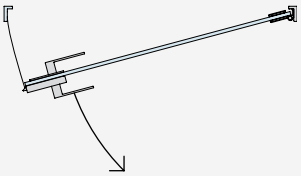

FINISH AND QUANTITY OF THE FULL KIT

☐ /6 BLACK ALUMINIUM

☐ /97 MATT ALUMINIUM

☐ Other _____

Qty = _____ Pcs

ACCESSORIES

HINGES Qty = ___ Pcs	 ☐ FA50 Squared hinge for narrow jambs	(attach technical data sheet) ☐ OTHER				
	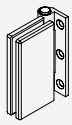 ☐ FA100 Rectangular hinge for narrow jambs					
LOCK Qty = ___ Pcs	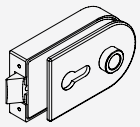 ☐ AP1203BORH Mechanical lock with hole for cylinder	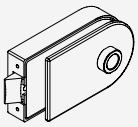 ☐ AP1203BOST Mechanical lock without hole for cylinder	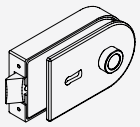 ☐ AP1203BOPA Mechanical lock with patented key	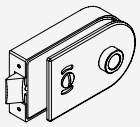 ☐ AP1203BOKS Mechanical lock free/occupied	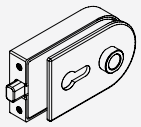 ☐ AP1203BOMG Magnetic lock with hole for cylinder	(attach technical data sheet) ☐ OTHER
	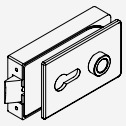 ☐ AP2203BORH Mechanical lock with hole for cylinder	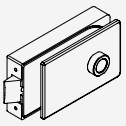 ☐ AP2203BOST Mechanical lock without hole for cylinder	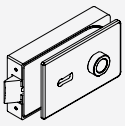 ☐ AP2203BOPA Mechanical lock with patented key	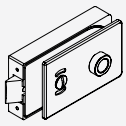 ☐ AP2203BOKS Mechanical lock free/occupied	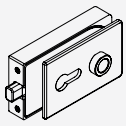 ☐ AP2203BOMG Magnetic lock with hole for cylinder	
HANDLE Qty = ___ Pcs	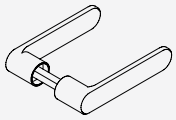 ☐ APHANDRC Rounded closed handle	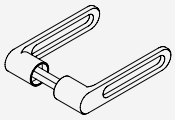 ☐ APHANDRH Rounded open handle	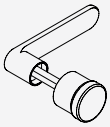 ☐ APHAFKRC Rounded closed handle, with fixed door knob	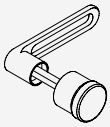 ☐ APHAFKRH Rounded open handle, with fixed door knob		
	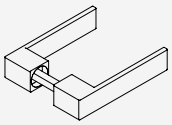 ☐ APHANDSC Squared closed handle	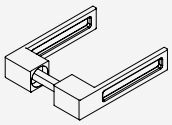 ☐ APHANDSH Squared open handle	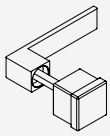 ☐ APHAFKSC Squared closed handle, with fixed door knob	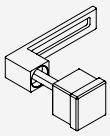 ☐ APHAFKSH Squared open handle, with fixed door knob		
CYLINDER (if required) Qty = ___ Pcs	 ☐ CISA2227D Cylinder different key	 ☐ CISA2227U Cylinder single key	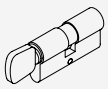 ☐ S1217U Cylinder, different key with door knob			
STRIKE PLATE Qty = ___ Pcs	 ☐ SERH17 Strike plate for mechanical latch	 ☐ APROIN17M Strike plate for magnetic latch	(attach technical data sheet) ☐ OTHER			

IMBOTTE Z-SHAPED 50 FULL KIT

Material: Aluminium
Finish: /6 /97

Kit comprising:

Art.	Description	Qty
IMB43KIT	IMBOTTE Z-SHAPED door panel kit	1 Pc
FA50	Squared hinge for narrow door jambs	2 Pcs
AP2203BORH	Mechanical lock with hole for cylinder	1 Pc
APHANDSC	Squared closed handle	1 Pc
SERH17	Lock strike plate	1 Pc
LAVPRO2	Custom processing	1 Pc
CISA2227U / **CISA2227D**	European cylinder single key / European cylinder different key	1 Pc

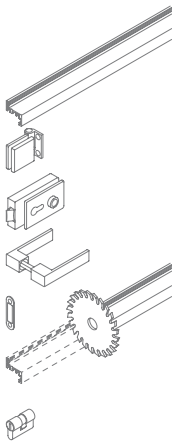

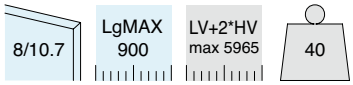

Art.	Description	For glass	Key	Qty
IMB4350KITU	IMBOTTE Z-SHAPED 50 full kit cut to size	From **8** to **10.7** mm	Single key	1 Pc
IMB4350KITD	IMBOTTE Z-SHAPED 50 full kit cut to size	From **8** to **10.7** mm	Different key	1 Pc
IMB4350KITSC	IMBOTTE Z-SHAPED 50 full kit cut to size	From **8** to **10.7** mm	Without cylinder	1 Pc

DIAGRAM AND RECCOMMENDED GLASS SIZING

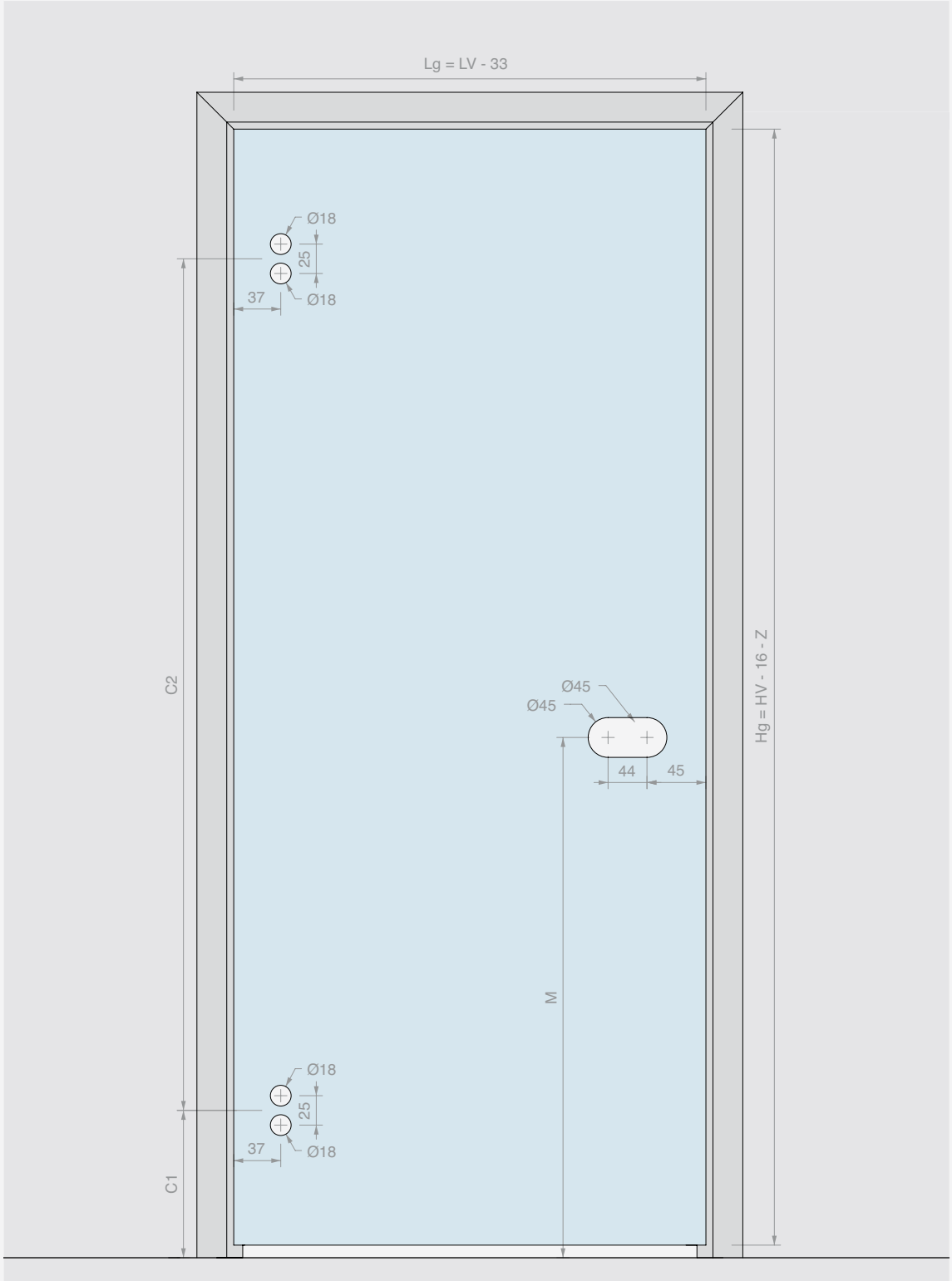

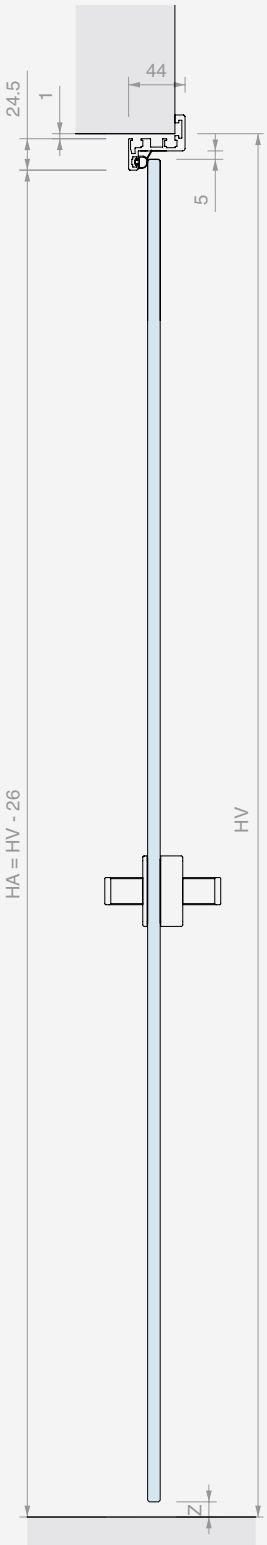

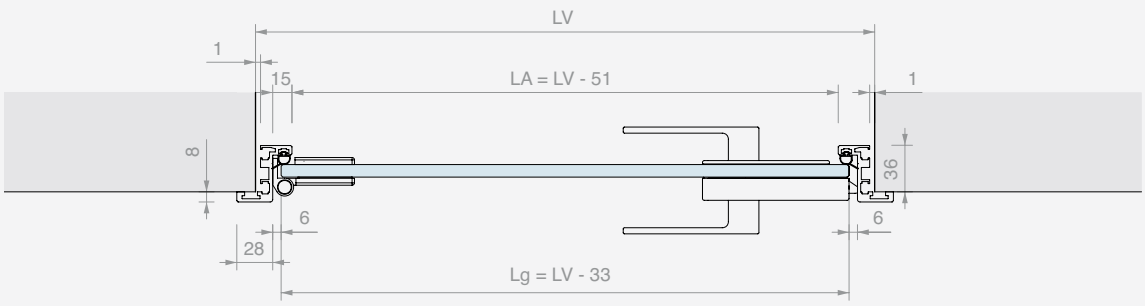

IMBOTTE Z-SHAPED 148AL FULL KIT

Material: Aluminium
Finish: /6 /97

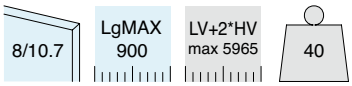

Kit comprising:

Art.	Description	Qty
IMB43KIT	IMBOTTE Z-SHAPED door panel kit	1 Pc
CER148AL	Rounded hinge for door jambs	2 Pcs
AP1203BORH	Mechanical lock with hole for cylinder	1 Pc
APHANDRC	Rounded closed handle	1 Pc
SERH17	Lock strike plate	1 Pc
LAVPRO2	Custom processing	1 Pc
CISA2227U / **CISA2227D**	European cylinder single key / European cylinder different key	1 Pc

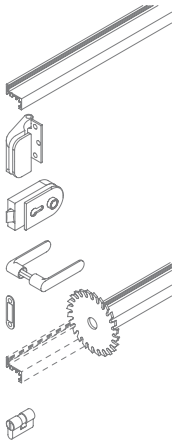

Art.	Description	For glass	Key	Qty
IMB43148KITU	IMBOTTE Z-SHAPED 148AL full kit cut to size	From **8** to **10.7** mm	Single key	1 Pc
IMB43148KITD	IMBOTTE Z-SHAPED 148AL full kit cut to size	From **8** to **10.7** mm	Different key	1 Pc
IMB43148KITSC	IMBOTTE Z-SHAPED 148AL full kit cut to size	From **8** to **10.7** mm	Without cylinder	1 Pc

DIAGRAM AND RECCOMMENDED GLASS SIZING

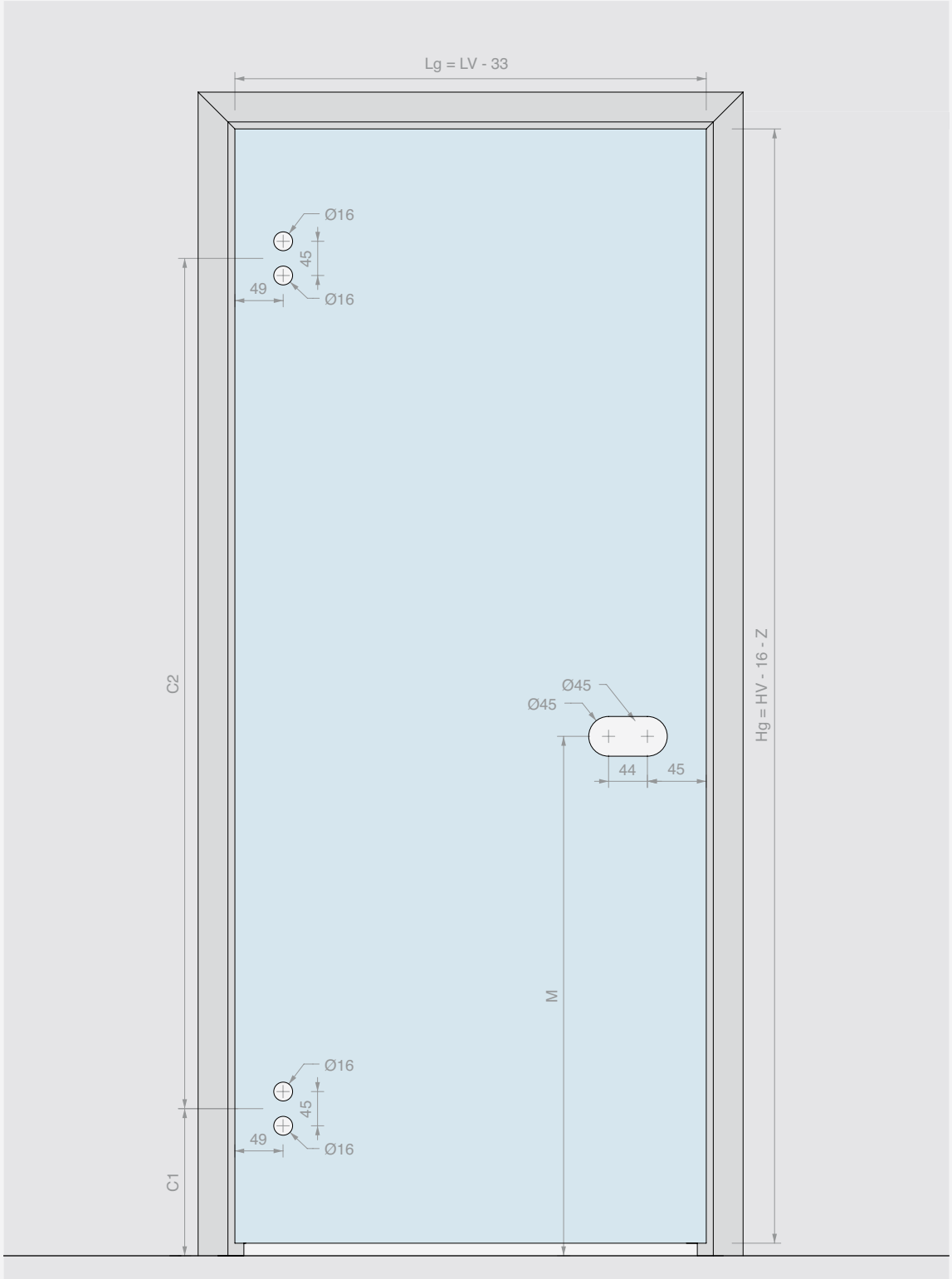

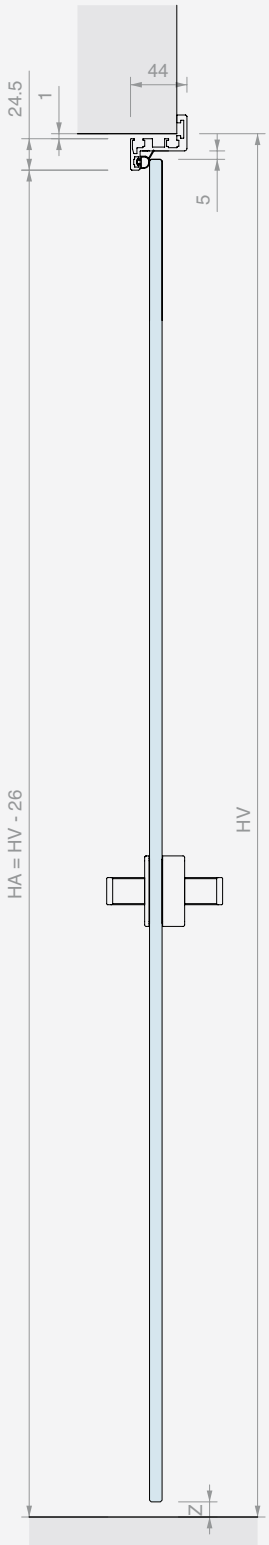

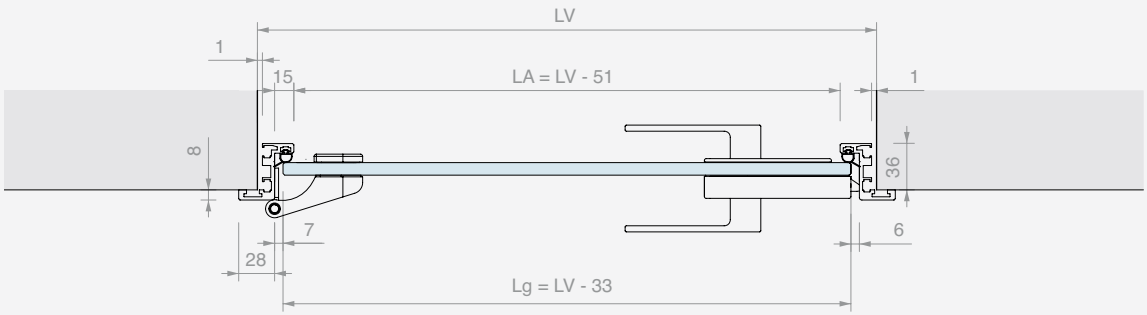

FORM TO ORDER CUSTOM IMBOTTE Z-SHAPED

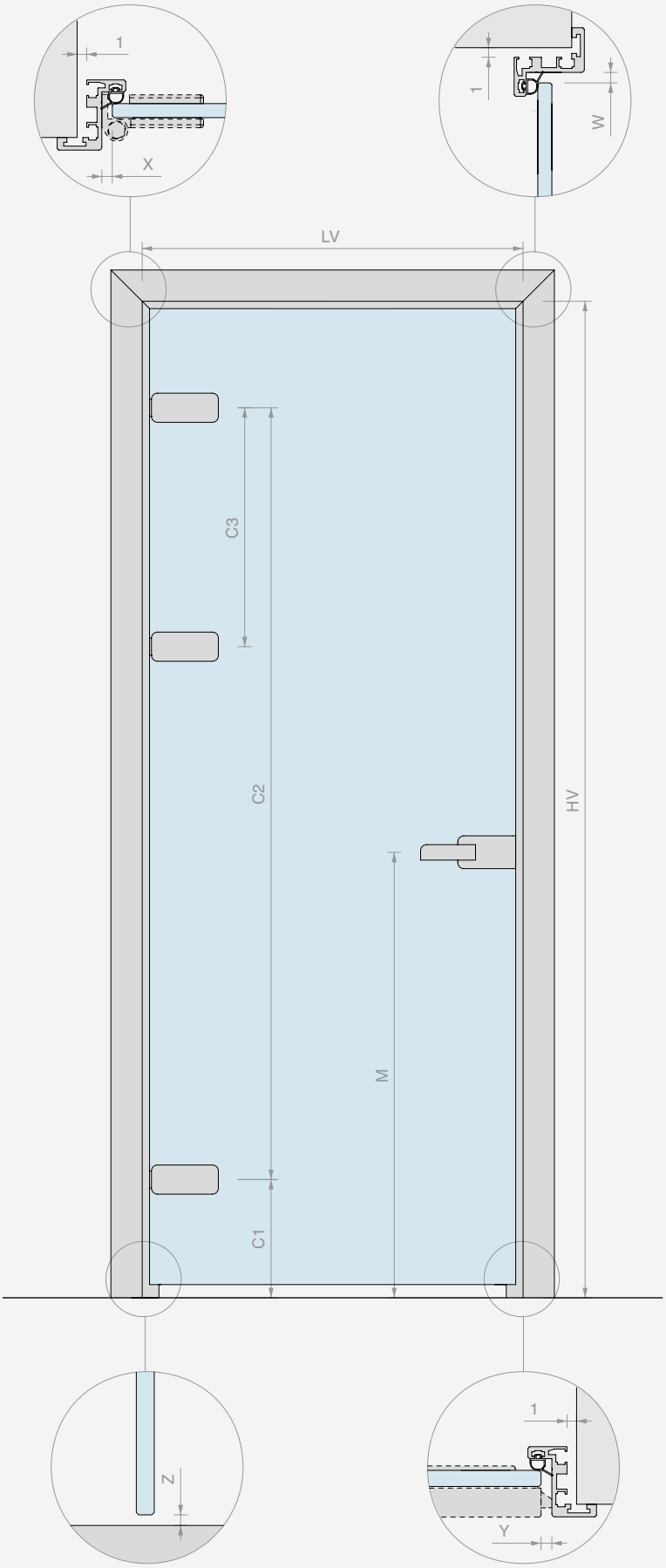

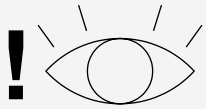

PROFILE PROCESSING

DOOR OPENING SIZE

LV = _____ mm

HV = _____ mm

DOOR PANEL THICKNESS

_____ mm

OTHER DIMENSIONS

☐ Values as per your suggestion

X = _____ mm

Z = _____ mm

Y = _____ mm

W = _____ mm

C1 = _____ mm

C2 = _____ mm

C3 = _____ mm (where present)

M = _____ mm

☐ Left opening

☐ Right opening

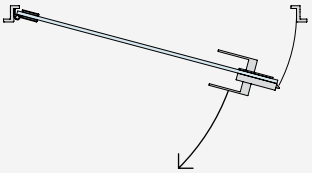

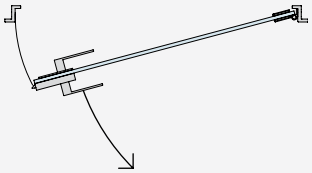

FINISH AND QUANTITY OF THE FULL KIT

☐ /6 BLACK ALUMINIUM

☐ /97 MATT ALUMINIUM

☐ Other _____

Qty = _____ Pcs

ACCESSORIES

HINGES

Qty = ___ Pcs

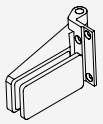

☐ CER4ALSQ
Squared hinge for door jambs

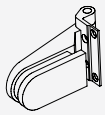

☐ CER4AL
Rounded hinge for door jambs

☐ FA50
Squared hinge for narrow door jambs

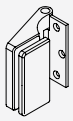

☐ CER148ALSQ
Squared hinge for door jambs

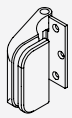

☐ CER148AL
Rounded hinge for door jambs

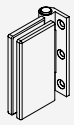

☐ FA100
Rectangular hinge for narrow door jambs

(attach technical data sheet)

☐ OTHER

LOCK

Qty = ___ Pcs

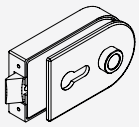

☐ AP1203BORH
Mechanical lock with hole for cylinder

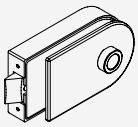

☐ AP1203BOST
Mechanical lock without hole for cylinder

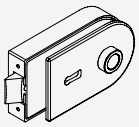

☐ AP1203BOPA
Mechanical lock with patented key

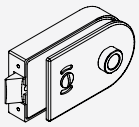

☐ AP1203BOKS
Mechanical lock free/occupied

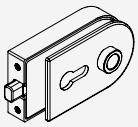

☐ AP1203BOMG
Magnetic lock with hole for cylinder

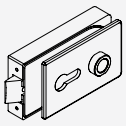

☐ AP2203BORH
Mechanical lock with hole for cylinder

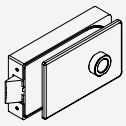

☐ AP2203BOST
Mechanical lock without hole for cylinder

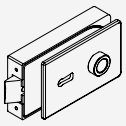

☐ AP2203BOPA
Mechanical lock with patented key

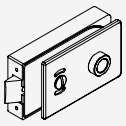

☐ AP2203BOKS
Mechanical lock free/occupied

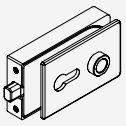

☐ AP2203BOMG
Magnetic lock with hole for cylinder

(attach technical data sheet)

☐ OTHER

HANDLE

Qty = ___ Pcs

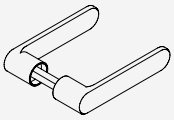

☐ APHANDRC
Rounded closed handle

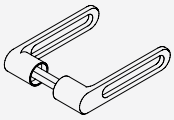

☐ APHANDRH
Rounded open handle

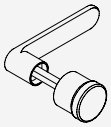

☐ APHAFKRC
Rounded closed handle, with fixed door knob

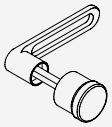

☐ APHAFKRH
Rounded open handle, with fixed door knob

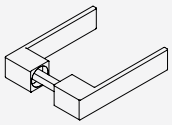

☐ APHANDSC
Squared closed handle

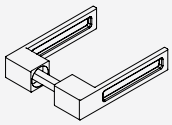

☐ APHANDSH
Squared open handle

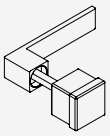

☐ APHAFKSC
Squared closed handle with fixed door knob

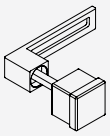

☐ APHAFKSH
Squared closed handle, with fixed door knob

CYLINDER (if required)

Qty = ___ Pcs

☐ CISA2227D
Cylinder different key

☐ CISA2227U
Cylinder single key

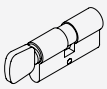

☐ S1217U
Cylinder, different key with door knob

STRIKE PLATE

Qty = ___ Pcs

☐ SERH17
Strike plate for mechanical latch

☐ APROIN17M
Strike plate for magnetic latch

(attach technical data sheet)

☐ OTHER

IMBOTTE L-SHAPED DOOR PANEL KIT

Material: Aluminium
Finish: /6 /97

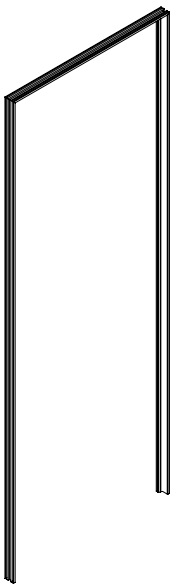

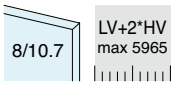

DOOR
PANEL

DIAGRAM AND RECCOMMENDED GLASS SIZING

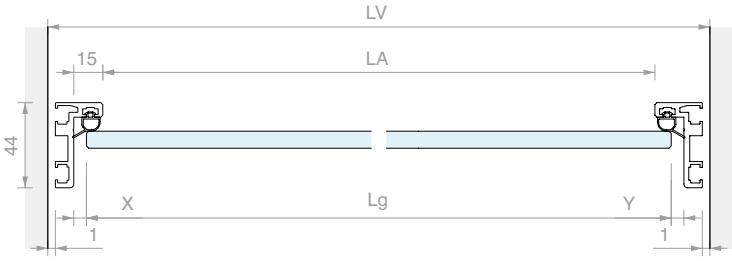

Kit comprising:

Art.	Description	Qty
IMB2544	Internal door opening profile IMBOTTE L-SHAPED	1 Pc
PD001	4 joining brackets	1 Pc
PD8A	Door striker gasket	6 m
IMBCUT	Cut-to-size	1 Pc

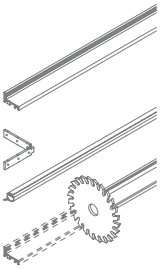

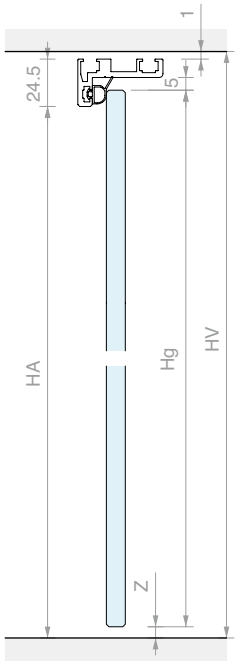

FORMULAS

Lg = LV - (22 + X + Y)
Hg = HV - 16 - Z

OTHER DIMENSIONS

LA = LV - 51
HA = HV - 26

Dimensions X and Y depend on the hinges and lock used

Art.	Description	For glass	Qty
IMB25KIT	IMBOTTE L-SHAPED door panel kit cut to size	From **8** to **10.7** mm	1 Pc

IMBOTTE Z-SHAPED DOOR PANEL KIT

Material: Aluminium
Finish: /6 /97

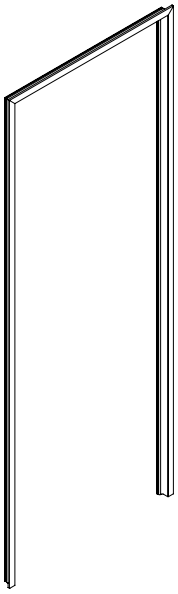

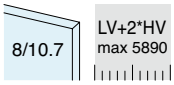

DOOR PANEL

DIAGRAM AND RECCOMMENDED GLASS SIZING

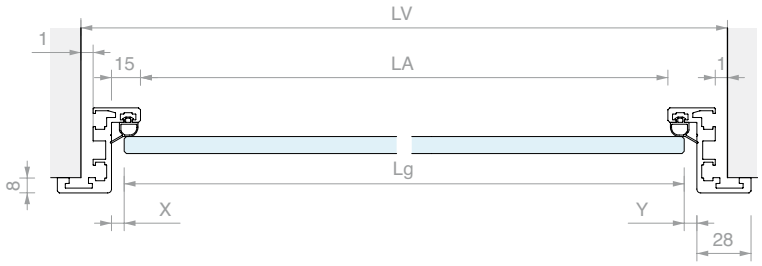

Kit comprising:

Art.	Description	Qty
IMB4344	IMBOTTE Z-SHAPED frame profile	1 Pc
PD001	4 joining brackets	1 Pc
PD002	4 alignment brackets	1 Pc
PD8A	Door striker gasket	6 m
IMBCUT	Cut-to-size	1 Pc

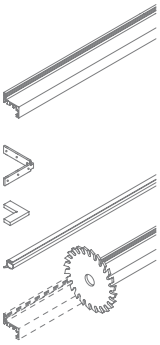

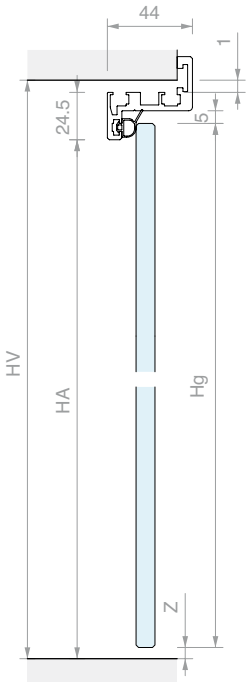

FORMULAS

Lg = LV - (22 + X + Y)
Hg = HV - 16 - Z

OTHER DIMENSIONS

LA = LV - 51
HA = HV - 26

Dimensions X and Y depend on the hinges and lock used

Art.	Description	For glass	Qty
IMB43KIT	IMBOTTE Z-SHAPED door panel kit cut to size	From **8** to **10.7** mm	1 Pc

INTERNAL DOOR-OPENING PROFILE FOR L-SHAPED IMBOTTE DOORS

Material: Aluminium

Finish: /6 /10 /97

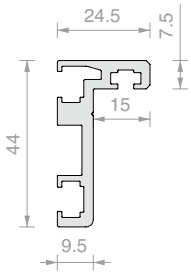

Art.	Length	For glass	Qty
IMB254415	**1497** mm	From **8** to **10.7** mm	1 Pc
IMB254430	**2998** mm	From **8** to **10.7** mm	1 Pc
IMB2544	**6000** mm	From **8** to **10.7** mm	1 Pc

FRAME PROFILE FOR Z-SHAPED IMBOTTE DOORS

Material: Aluminium

Finish: /6 /10 /97

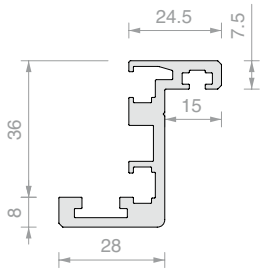

Art.	Length	For glass	Qty
IMB434415	**1497** mm	From **8** to **10.7** mm	1 Pc
IMB434430	**2998** mm	From **8** to **10.7** mm	1 Pc
IMB4344	**6000** mm	From **8** to **10.7** mm	1 Pc

DOOR STRIKER GASKET

Material: Silicone

Finish: /6 /97

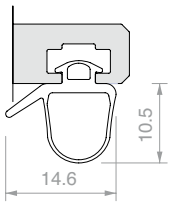

Art.	For glass	Qty
PD8A	From **8** to **10.76** mm	1 m

DOOR STRIKER GASKET

Material: TPE

Finish: /6 /97

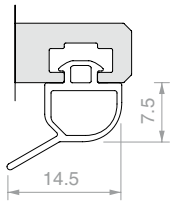

Art.	For glass	Qty
IMBG	From **8** to **10** mm	1 m

4 X 90° PROFILE JOINING BRACKETS

Material: AISI 304 steel

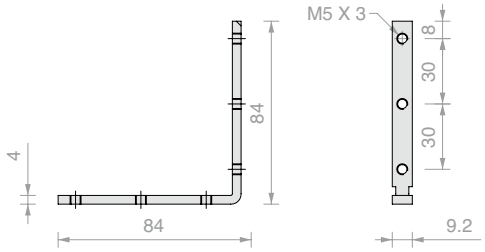

Art.	Qty
PD001	1 Pc

4 X 90° PROFILES ALIGNMENT BRACKETS

Material: POM

Finish: /6

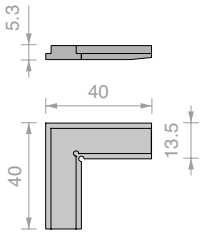

Art.	Qty
PD002	1 Pc

CALCULATION AND CUT AT 45° IMBOTTE IMB

Art.	Qty
IMBCUT	1 Pc

PROCESSING ON IMBOTTE

We advise completing the forms on pages 434/435, 440/441
also available in editable format online on our website

Art.	Processing	Qty
LAVCER	for 2 Logli hinges	1 Pc
LAVSER	for Logli strike plate	1 Pc
LAVPRO2	for 2 Logli hinges and 1 strike plate	1 Pc
LAVPRO3	for 3 Logli hinges and 1 strike plate	1 Pc

IMBOTTE 100 4ALSQ FULL KIT

Material: Aluminium
Finish: /97

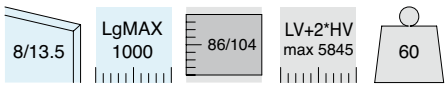

Kit comprising:

Art.	Description	Qty
IMBKIT100-8	Imbotte 100 door striker profile cut-to-size	1 Pc
CER4ALSQ	Squared hinge for door jambs	2 Pcs
AP2203BORH	Mechanical lock with hole for cylinder	1 Pc
APHANDSC	Squared closed handle	1 Pc
SERH17	Lock strike plate	1 Pc
LAVPRO2	Custom processing	1 Pc
CISA2227U / **CISA2227D**	European cylinder single key / European cylinder different key	1 Pc

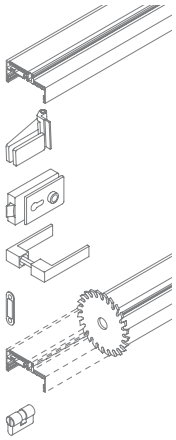

Art.	Description	Door panel	Wall thickness	Key	Qty
IMB1004SKITU	IMBOTTE 100 4ALSQ full kit cut to size	From **8** to **13.5** mm	From **86** to **104** mm	Single key	1 Pc
IMB1004SKITD	IMBOTTE 100 4ALSQ full kit cut to size	From **8** to **13.5** mm	From **86** to **104** mm	Different key	1 Pc
IMB1004SKITSC	IMBOTTE 100 4ALSQ full kit cut to size	From **8** to **13.5** mm	From **86** to **104** mm	Without cylinder	1 Pc

DIAGRAM AND RECCOMMENDED GLASS SIZING

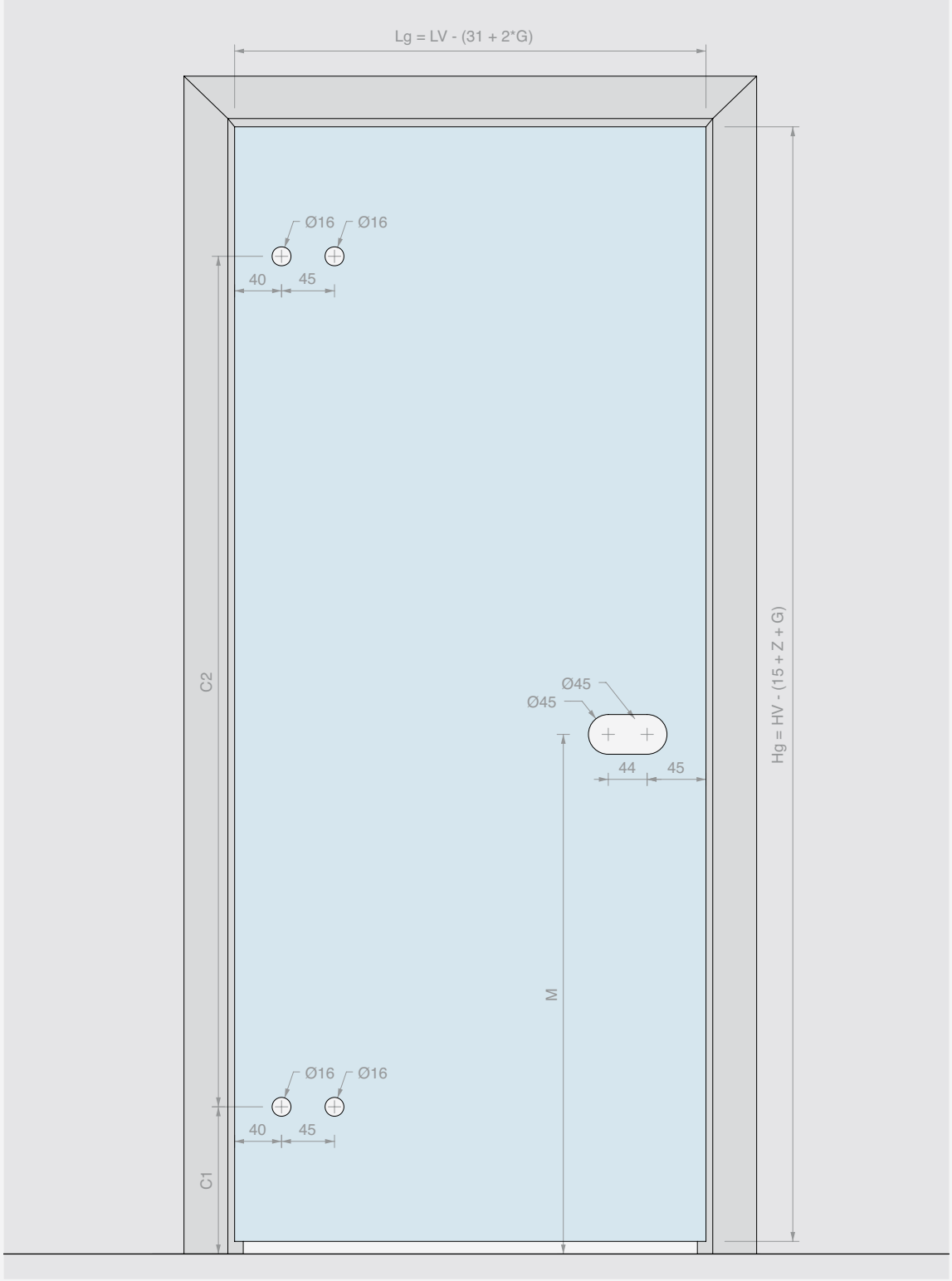

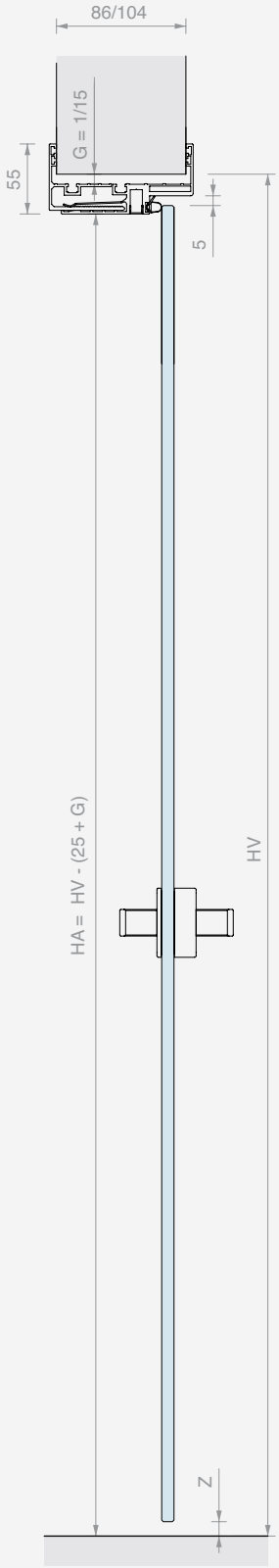

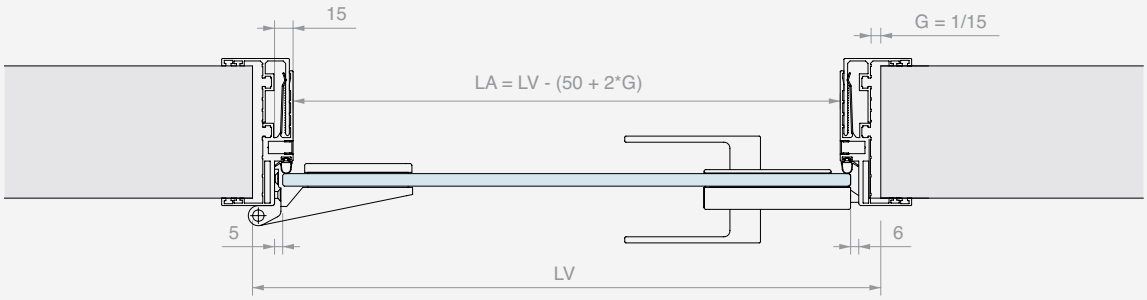

IMBOTTE 90145 4ALSQ FULL KIT

Material: Aluminium
Finish: /97

Kit comprising:

Art.	Description	Qty
IMBKIT8	Imbotte 90145 door striker profile cut-to-size	1 Pc
CER4ALSQ	Squared hinge for door jambs	2 Pcs
AP2203BORH	Mechanical lock with hole for cylinder	1 Pc
APHANDSC	Squared closed handle	1 Pc
SERH17	Lock strike plate	1 Pc
LAVPRO2	Custom processing	1 Pc
CISA2227U / **CISA2227D**	European cylinder single key / European cylinder different key	1 Pc

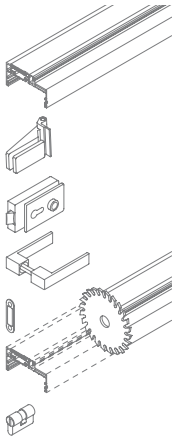

Art.	Description	Door panel	Wall thickness	Key	Qty
IMB1454SKITU	IMBOTTE 90145 4ALSQ full kit cut to size	From **8** to **13.5** mm	From **107** to **145** mm	Single key	1 Pc
IMB1454SKITD	IMBOTTE 90145 4ALSQ full kit cut to size	From **8** to **13.5** mm	From **107** to **145** mm	Different key	1 Pc
IMB1454SKITSC	IMBOTTE 90145 4ALSQ full kit cut to size	From **8** to **13.5** mm	From **107** to **145** mm	Without cylinder	1 Pc

DIAGRAM AND RECCOMMENDED GLASS SIZING

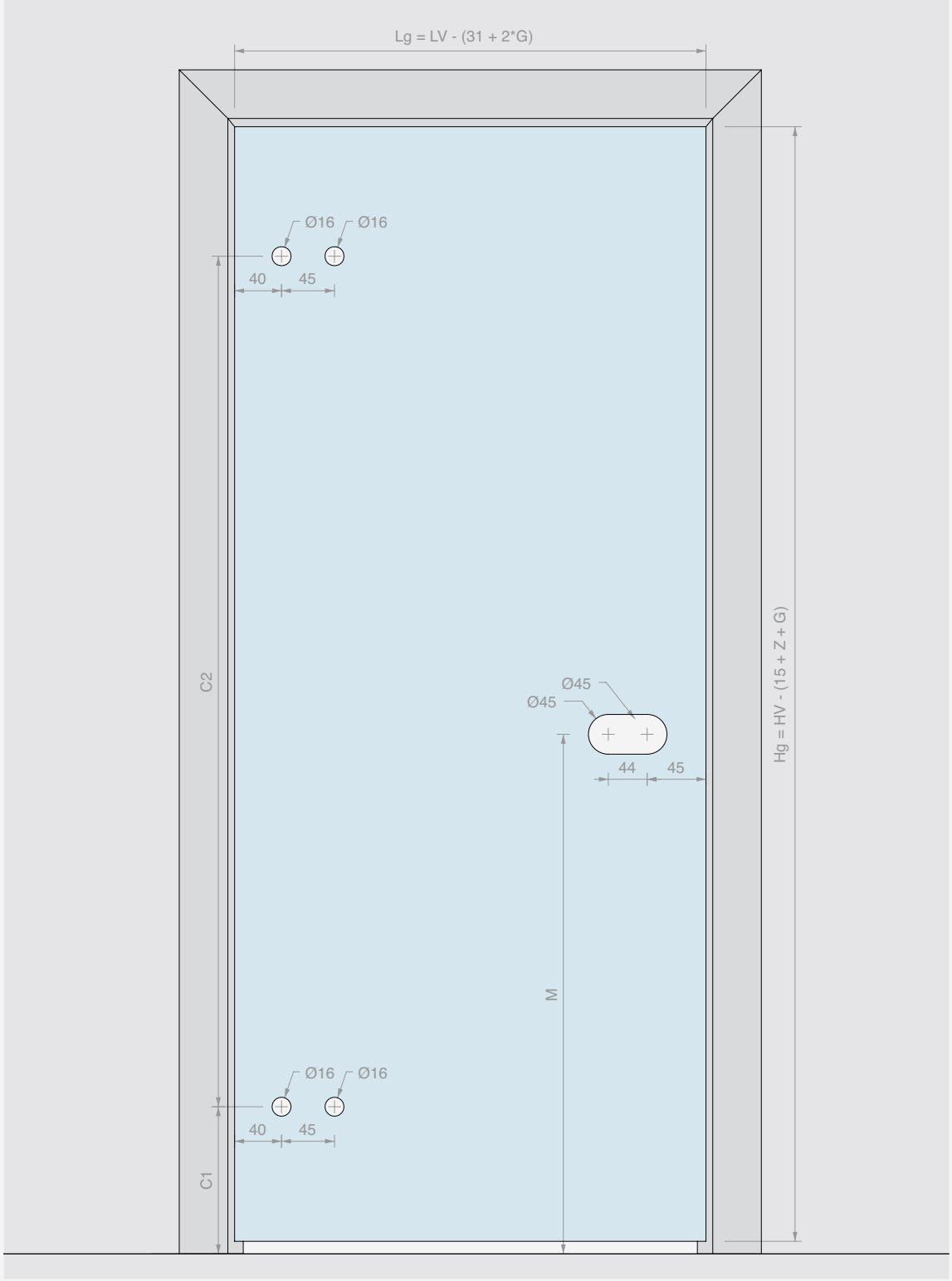

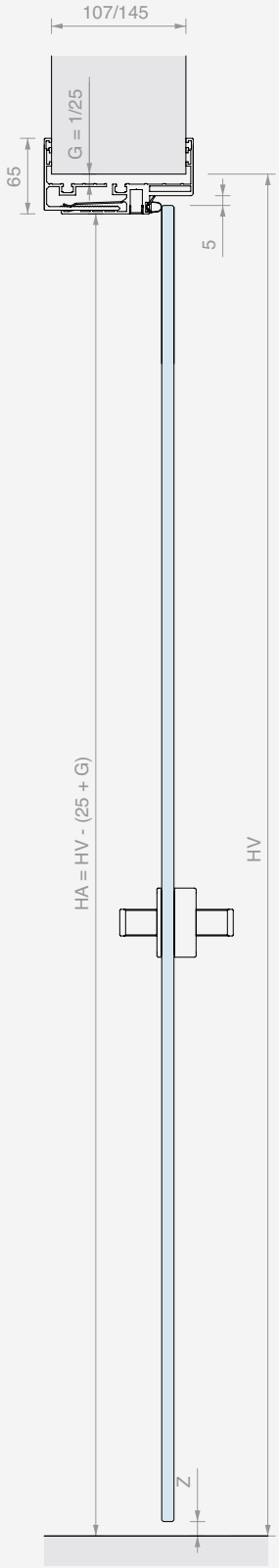

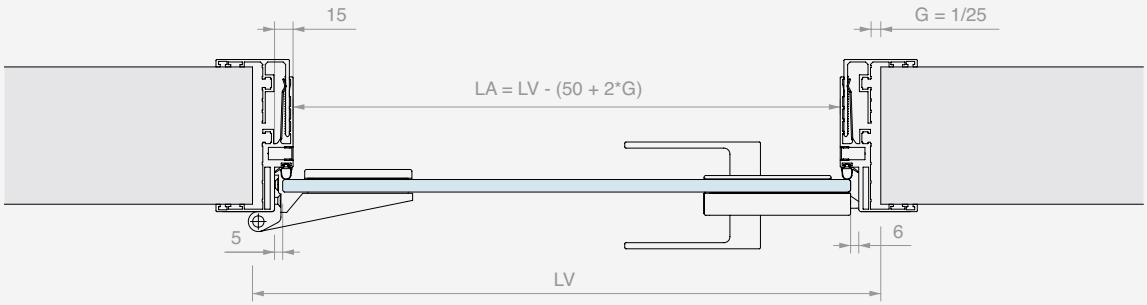

FORM TO ORDER CUSTOM IMBOTTE

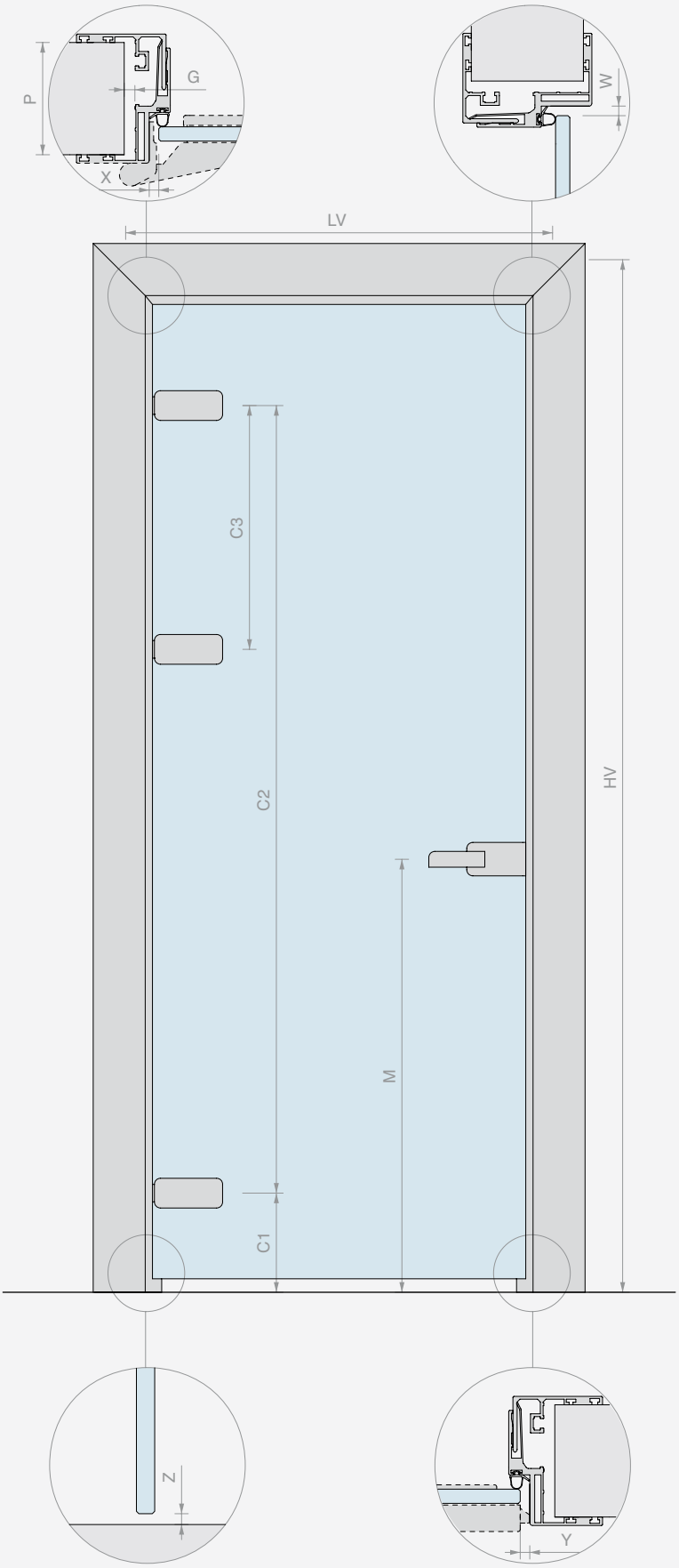

PROFILE PROCESSING

DOOR OPENING SIZE

LV = _____ mm

HV = _____ mm

DOOR PANEL THICKNESS

_____ mm

WALL THICKNESS (P)

☐ 86/104 ☐ 107/145

OTHER DIMENSIONS

☐ Values as per your suggestion

X = _____ mm

G = _____ mm

Z = _____ mm

Y = _____ mm

W = _____ mm

C1 = _____ mm

C2 = _____ mm

C3 = _____ mm
(where present)

M = _____ mm

☐ Left opening

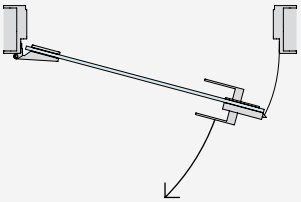

☐ Right opening

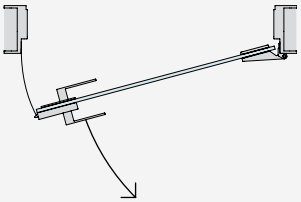

FINISH AND QUANTITY OF THE FULL KIT

☐ /97 MATT ALUMINIUM

☐ Other _____

Qty = _____ Pcs

ACCESSORIES

HINGES

Qty = ___ Pcs

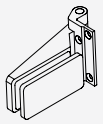

☐ CER4ALSQ
Squared hinge for door jambs

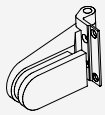

☐ CER4AL
Rounded hinge for door jambs

☐ FA50
Squared hinge for narrow jambs

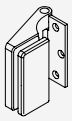

☐ CER148ALSQ
Squared hinge for door jambs

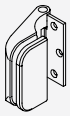

☐ CER148AL
Rounded hinge for door jambs

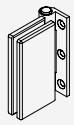

☐ FA100
Rectangular hinge for narrow door jambs

(attach technical data sheet)

☐ OTHER

LOCK

Qty = ___ Pcs

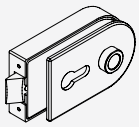

☐ AP1203BORH
Mechanical lock with hole for cylinder

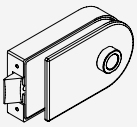

☐ AP1203BOST
Mechanical lock without hole for cylinder

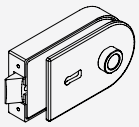

☐ AP1203BOPA
Mechanical lock with patented key

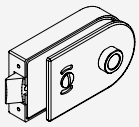

☐ AP1203BOKS
Mechanical lock free/occupied

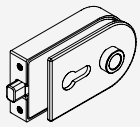

☐ AP1203BOMG
Magnetic lock with hole for cylinder

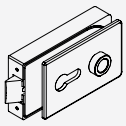

☐ AP2203BORH
Mechanical lock with hole for cylinder

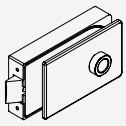

☐ AP2203BOST
Mechanical lock without hole for cylinder

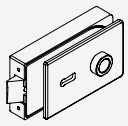

☐ AP2203BOPA
Mechanical lock with patented key

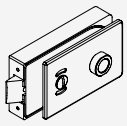

☐ AP2203BOKS
Mechanical lock free/occupied

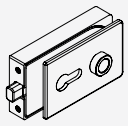

☐ AP2203BOMG
Magnetic lock with hole for cylinder

(attach technical data sheet)

☐ OTHER

HANDLE

Qty = ___ Pcs

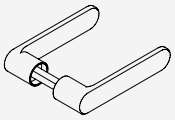

☐ APHANDRC
Rounded closed handle

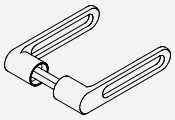

☐ APHANDRH
Rounded open handle

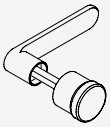

☐ APHAFKRC
Rounded closed handle, with fixed door knob

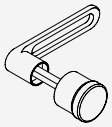

☐ APHAFKRH
Rounded open handle, with fixed door knob

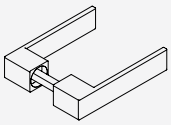

☐ APHANDSC
Squared closed handle

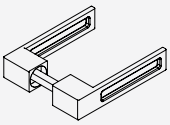

☐ APHANDSH
Squared open handle

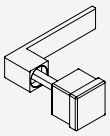

☐ APHAFKSC
Squared closed handle, with fixed door knob

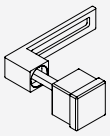

☐ APHAFKSH
Squared open handle, with fixed door knob

CYLINDER (if required)

Qty = ___ Pcs

☐ CISA2227D
Cylinder different key

☐ CISA2227U
Cylinder single key

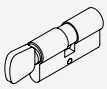

☐ S1217U
Cylinder, different key with door knob

STRIKE PLATE

Qty = ___ Pcs

☐ SERH17
Strike plate for mechanical latch

☐ APROIN17M
Strike plate for magnetic latch

(attach technical data sheet)

☐ OTHER

IMBOTTE 100 DOOR PANEL KIT

Material: Aluminium
Finish: /97

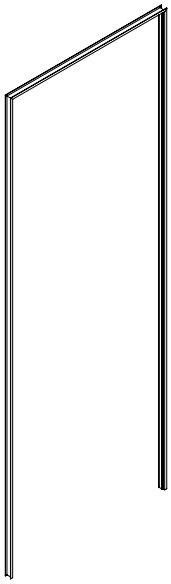

DOOR
PANEL

DIAGRAM AND RECCOMMENDED GLASS SIZING

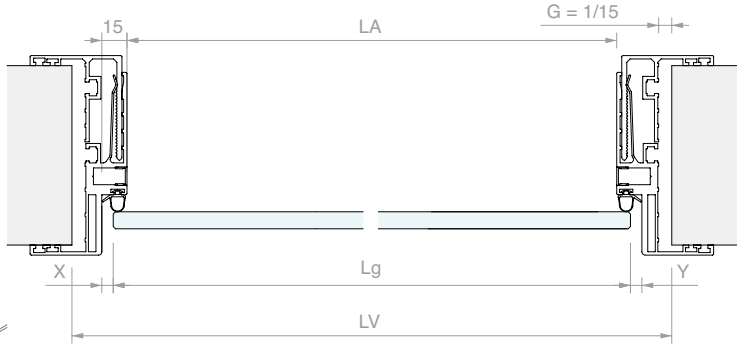

Kit comprising:

Art.	Description	Qty
IBT100	Frame profile for door panels	1 Pc
PD001	4 joining brackets	1 Pc
PD003	4 alignment brackets	1 Pc
PD8A	Grey door striker gasket	6 m
IMBCUT	Cut-to-size	1 Pc

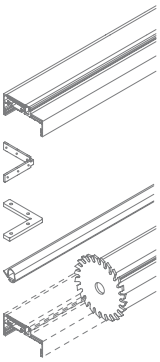

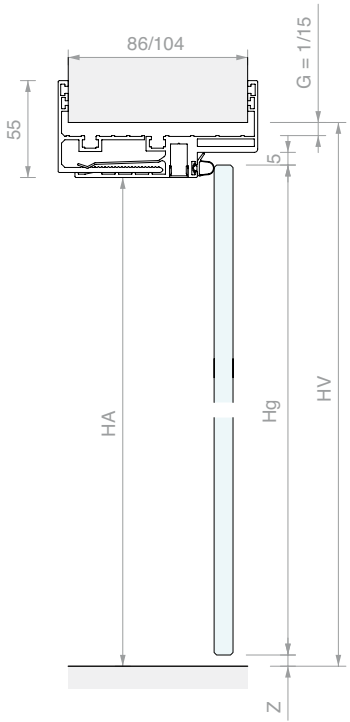

FORMULAS

Lg = LV - (20 + X + Y + 2*G)
Hg = HV - (15 + Z + G)

OTHER DIMENSIONS

LA = LV - (50 + 2*G)
HA = HV - (25 + G)

Art.	Description	Door panel	Wall thickness	Qty
IMBKIT100-8	IMBOTTE 100 door panel kit cut to size	From **8** to **13.7** mm	From **86** to **104** mm	1 Pc

IMBOTTE 90145 DOOR PANEL KIT

Material: Aluminium
Finish: /97

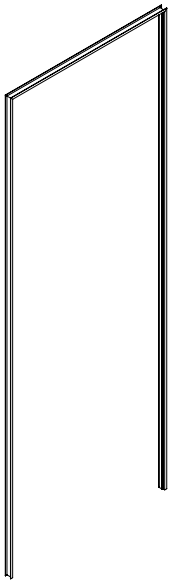

DOOR
PANEL

DIAGRAM AND RECCOMMENDED GLASS SIZING

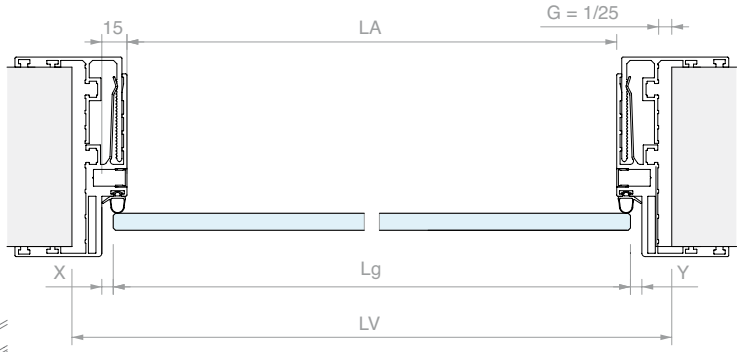

Kit comprising:

Art.	Description	Qty
IBT90145	Frame profile for door panels	1 Pc
PD001	4 joining brackets	1 Pc
PD003	4 alignment brackets	1 Pc
PD8A	Grey door striker gasket	6 m
IMBCUT	Cut-to-size	1 Pc

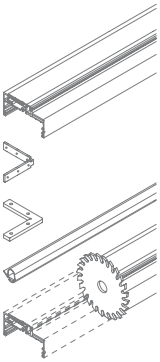

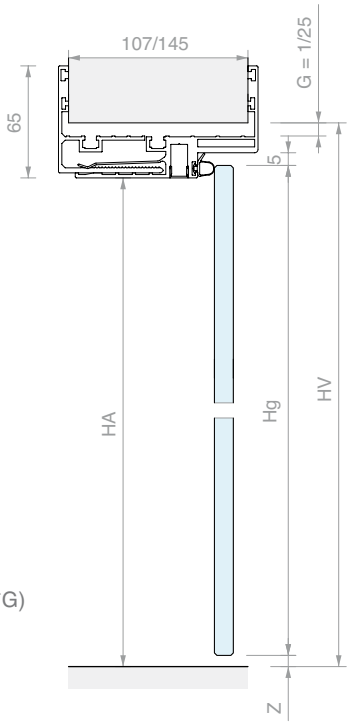

FORMULAS

Lg = LV - (20 + X + Y + 2*G)
Hg = HV - (15 + Z + G)

OTHER DIMENSIONS

LA = LV - (50 + 2*G)
HA = HV - (25 + G)

Art.	Description	Door panel	Wall thickness	Qty
IMBKIT8	IMBOTTE 90145 door panel kit cut to size	From **8** to **13.7** mm	From **107** to **145** mm	1 Pc

FRAME PROFILE FOR IMBOTTE 100 DOOR PANELS

Material: Aluminium

Finish: /97

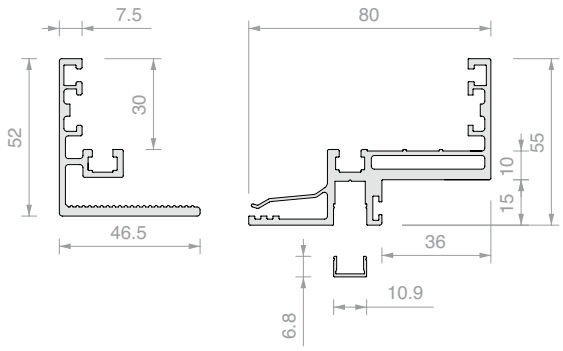

Art.	Length	For glass	Wall thickness	Qty
IBT10015	**1497** mm	From **8** to **13.5** mm	From **86** to **104** mm	1 Pc
IBT10030	**2998** mm	From **8** to **13.5** mm	From **86** to **104** mm	1 Pc
IBT100	**6000** mm	From **8** to **13.5** mm	From **86** to **104** mm	1 Pc

FRAME PROFILE FOR IMBOTTE 90145 DOOR PANELS

Material: Aluminium

Finish: /97

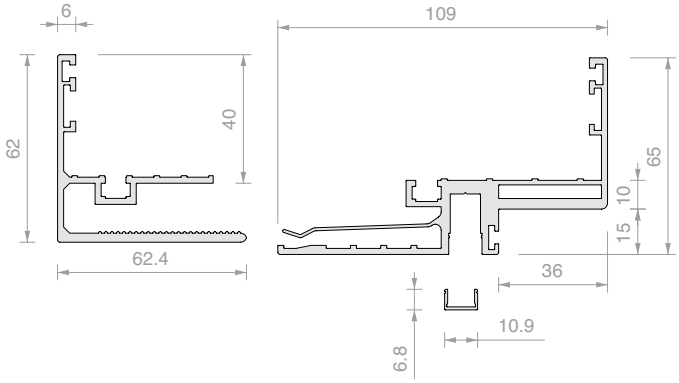

Art.	Length	For glass	Wall thickness	Qty
IBT9014515	**1497** mm	From **8** to **13.5** mm	From **107** to **145** mm	1 Pc
IBT9014530	**2998** mm	From **8** to **13.5** mm	From **107** to **145** mm	1 Pc
IBT90145	**6000** mm	From **8** to **13.5** mm	From **107** to **145** mm	1 Pc

DOOR STRIKER GASKET

Material: Silicone

Finish: /6 /97

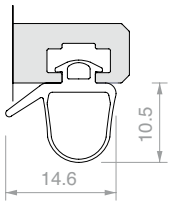

Art.	For glass	Qty
PD8A	From **8** to **10.76** mm	1 m

DOOR STRIKER GASKET

Material: PVC

Finish: /6 /97

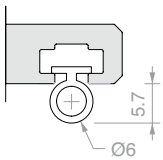

Art.	For glass	Qty
PD12	From **11.52** to **13.52** mm	1 m

4 X 90° PROFILE JOINING BRACKETS

Material: AISI 304 steel

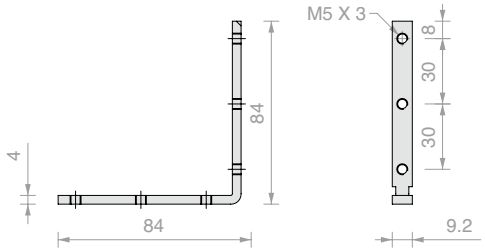

Art.	Qty
PD001	1 Pc

4 X 90° IMBOTTE ALIGNMENT BRACKETS

Material: AISI 304 steel

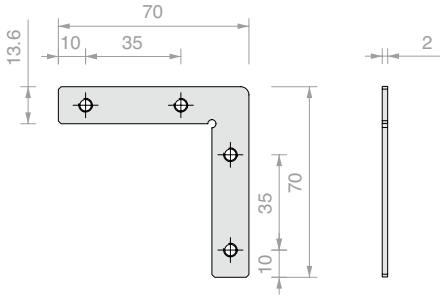

Art.	Qty
PD003	1 Pc

CALCULATION AND CUT AND 45° IMBOTTE IBT

Art.	Qty
IBTCUT	1 Pc

CUSTOM PROCESSING ON DOOR STRIKER PROFILES

We advise completing the forms on pages 450/451
also available in editable format online on our website

Art.	Processing	Qty
LAVCER	for 2 Logli hinges	1 Pc
LAVSER	for Logli strike plate	1 Pc
LAVPRO2	for 2 Logli hinges and 1 strike plate	1 Pc
LAVPRO3	for 3 Logli hinges and 1 strike plate	1 Pc

SYSTEMS FOR HINGED DOORS

PIVOT HINGES
Page 459

DOOR CLOSER
Page 494

HYDRAULIC PIVOT HINGE
Page 505

SIDE HINGES
Page 509

SIDE SPRING HINGES
Page 513

HINGES FOR DOOR JAMBS
Page 517

MODULAR LOCKS
Page 525

DOOR STOPS
Page 554

GLASS SEALING GASKETS
Page 556

BOTTOM SEALING PROFILES
Page 558

NOTE: dimensions marked with an asterisk must be checked, depending on the other components used on the glass. In case of any doubts, please contact the LOGLI Customer Car department.

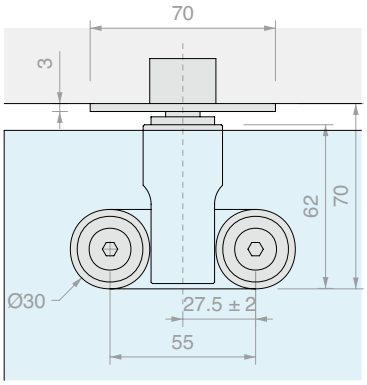

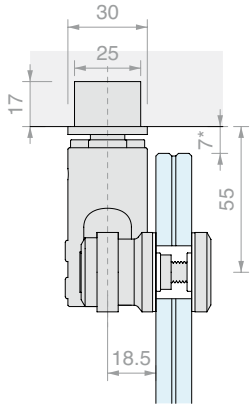

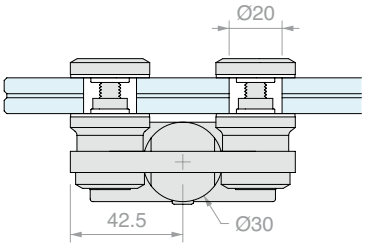

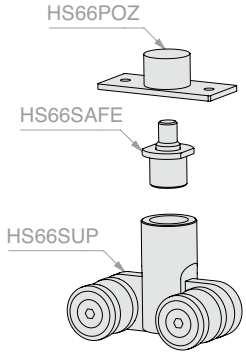

UPPER HINGE KIT HS66

Material: AISI 316 steel

Recommended glass hole size Ø20 mm

Finish: /9

Art.	For glass	Qty
HS66100	From **8** to **13.5** mm	1 Pc

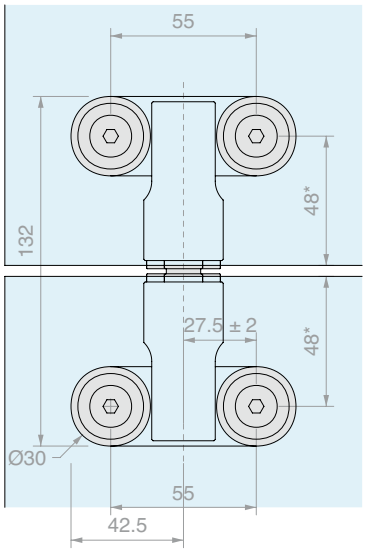

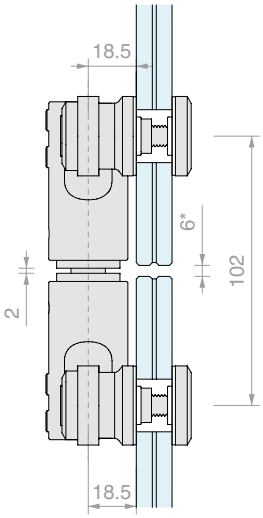

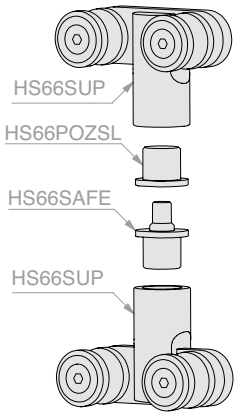

HINGE KIT FOR TRANSOM HS66

Material: AISI 316 steel

Recommended glass hole size Ø20 mm

Finish: /9

Art.	For glass	Qty
HS66200	From **8** to **13.5** mm	1 Pc

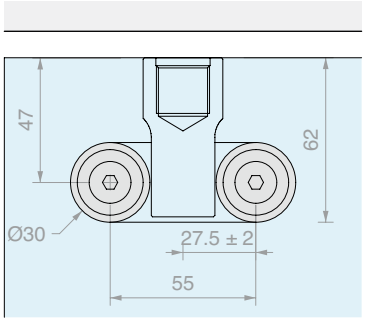

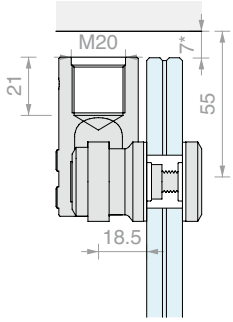

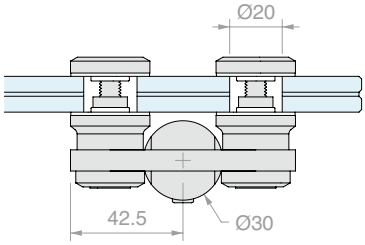

HS66 UPPER

Material: AISI 316 steel

Recommended glass hole size Ø20 mm

Finish: /9

Type Approved Safety Regular Production Surveillance
TÜVRheinland CERTIFIED
www.tuv.com ID 1111292548

Art.	For glass	Qty
HS66SUP	From **8** to **13.5** mm	1 Pc

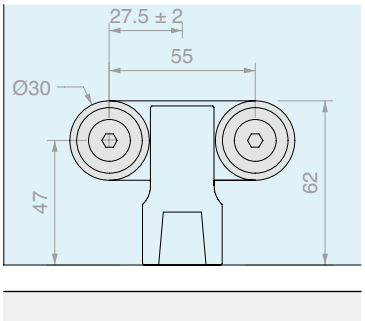

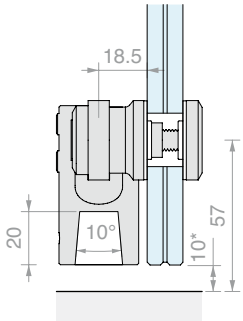

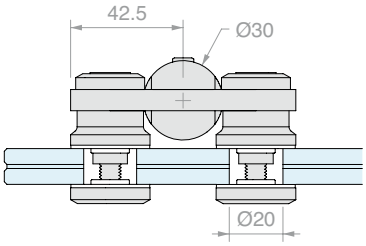

HS66 LOWER

Material: AISI 316 steel

Recommended glass hole size Ø20 mm

Finish: /9

Type Approved Safety Regular Production Surveillance
TÜVRheinland CERTIFIED
www.tuv.com ID 1111292548

Art.	For glass	Fixing	Qty
HS66INF	From **8** to **13.5** mm	**French**	1 Pc

SOCKET FOR TRANSOM

Material: Brass

For a transom with upper socket together with Art. HS66SUP

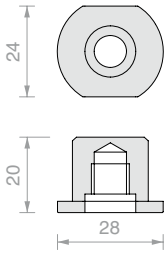

Art.	Q.ty
HS66POZSL	1 Pc

“SAFE SEAT” PIN

Material: Brass

Pivot with “safe seat” safety technology for supporting the door if the glass panel breaks

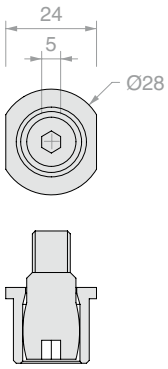

Art.	Q.ty
HS66SAFE	1 Pc

UPPER CEILING SOCKET

Material: AISI 316 steel

Finish: /8

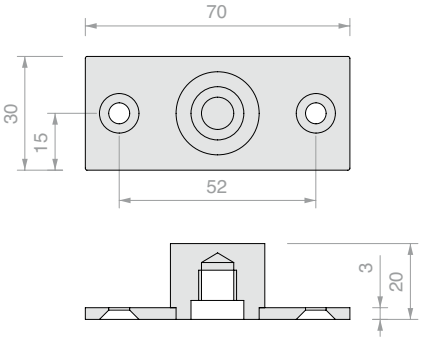

Art.	Q.ty
HS66POZ	1 Pc

FLOOR PIN HD3303

Material: Brass

Finish: /1 /3

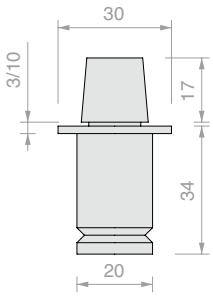

Art.	Fixing	Qty
HD3303	**French**	1 Pc

LOWER PIVOT HINGE

Material: AISI 316 steel

Recommended glass hole size Ø18 mm

Finish: /9

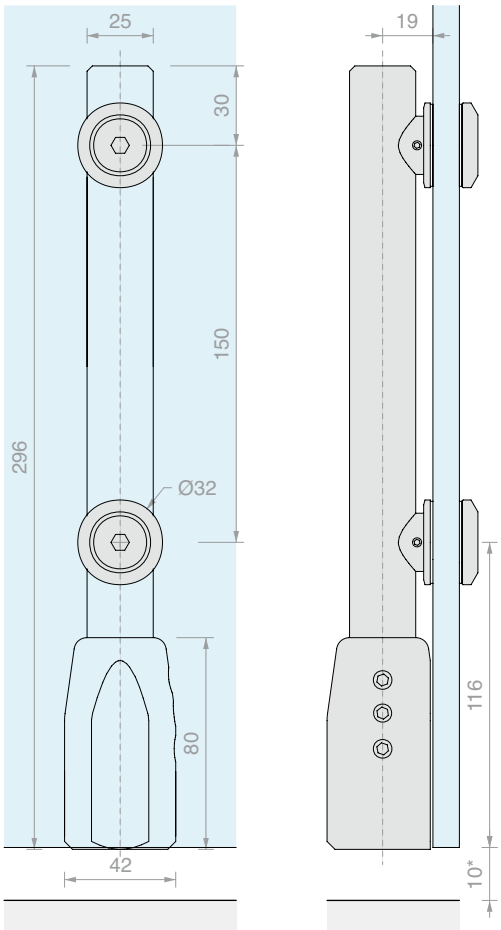

Art.	For glass	Fixing	Qty
PIVOTB002	From **10** to **13.5** mm	**German**	1 Pc

UPPER PIVOT HINGE

Material: AISI 316 steel

Recommended glass hole size Ø18 mm

For ceiling mounting, requires socket Art. PIVOTS011.

Finish: /9

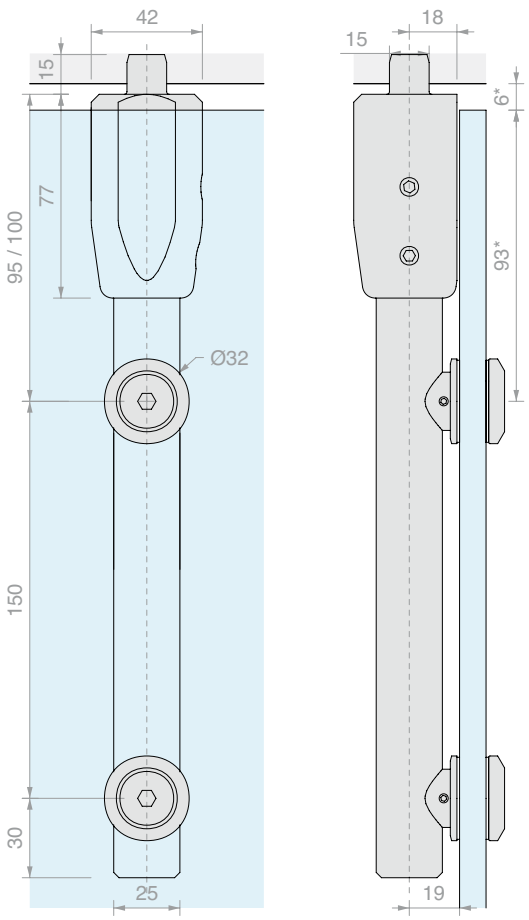

Art.	For glass	Qty
PIVOTB004	From **10** to **13.5** mm	1 Pc

TRANSOM FITTING 006

Material: AISI 316 steel

Recommended glass hole size Ø18 mm

Finish: /9

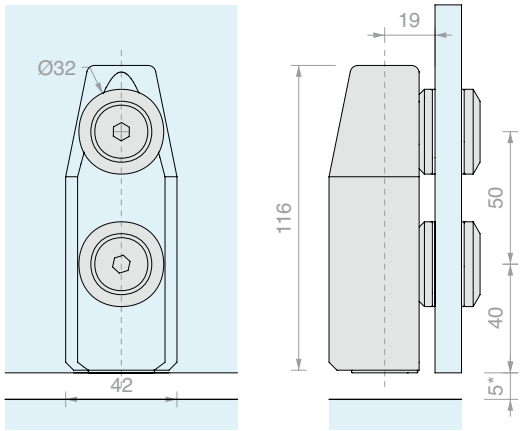

Art.	For glass	Qty
PIVOTB006	From **10** to **13.5** mm	1 Pc

TRANSOM FITTING WITH BRACKET 008

Material: AISI 316 steel

Recommended glass hole size Ø18 mm

Finish: /9

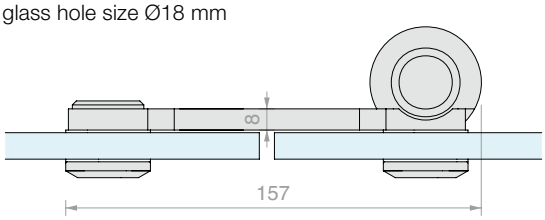

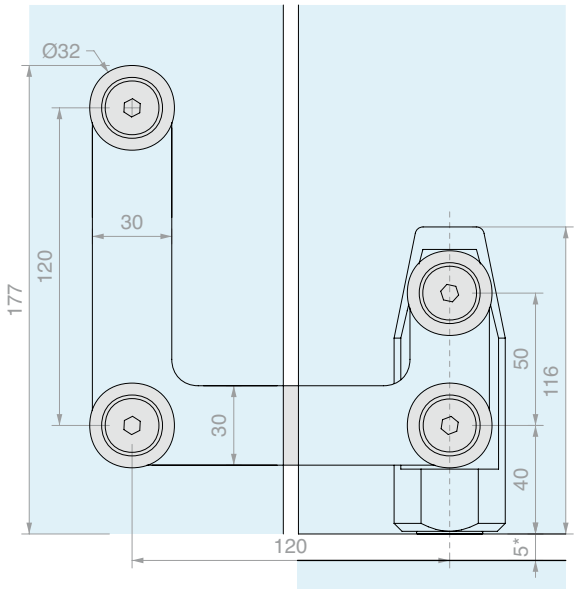

Art.	For glass	Qty
PIVOTB008	From **10** to **13.5** mm	1 Pc

BRACKET WITH CONNECTORS

Material: AISI 316 steel

Recommended glass hole size Ø18 mm

Finish: /9

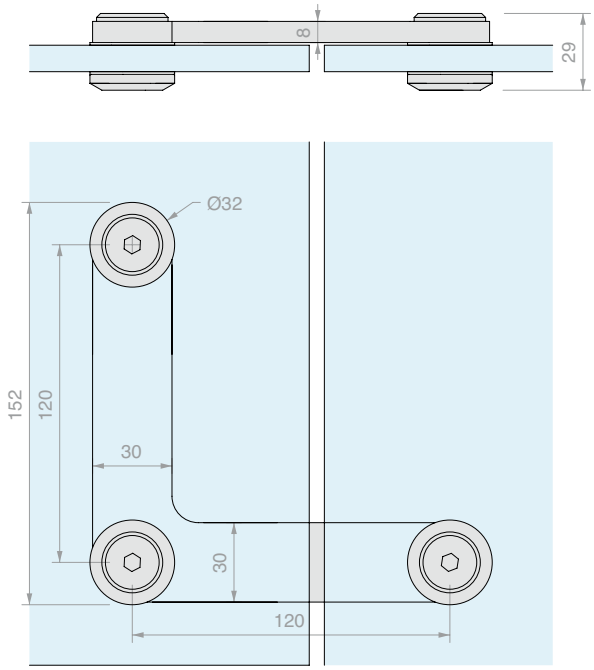

Art.	For glass	Qty
PIVOTB010	From **10** to **13.5** mm	1 Pc

UPPER ECCENTRIC SOCKET

Material: AISI 316 steel

Finish: /9

Alternatively, Art. HS1010SPL may be used

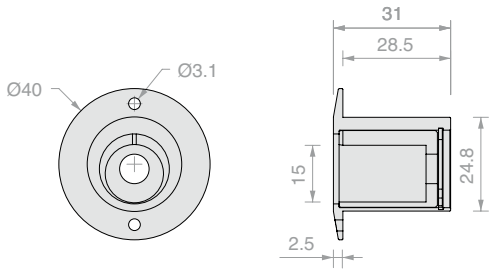

Art.	Qty
PIVOTS011	1 Pc

FREE FLOOR PIN WITH PLATE

Material: AISI 304 steel

Comes with 3 screws for anchoring to the floor and a trim plate for the black plastic ferrule.

Finish: /8

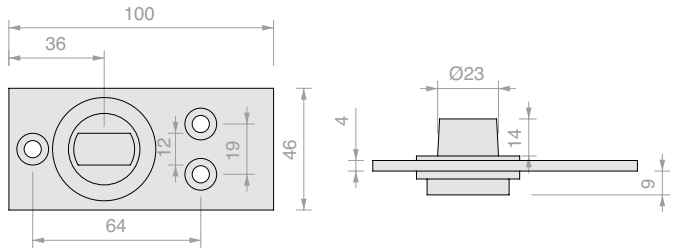

Art.	Fixing	Qty
PIVOTS014	**German**	1 Pc

LOWER HINGE GF100

Material: Aluminium body, s
tainless steel AISI 316 cover
Finish: /8 /15

Type Approved
Safety
Regular Production
Surveillance
TÜVRheinland CERTIFIED
www.tuv.com
ID 1111292548

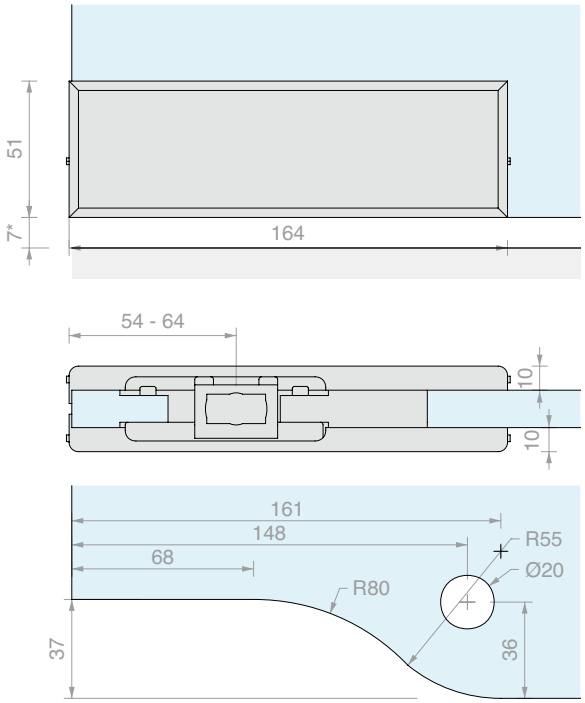

Art.	For glass	Fixing	Qty
GF100	From **10** to **13.5** mm	**German**	1 Pc

UPPER HINGE GF200

Material: Aluminium body,
stainless steel AISI 316 cover
For ceiling mounting, requires pivot Art. GL8815
or GL8819.
Finish: /8 /15

Type Approved
Safety
Regular Production
Surveillance
TÜVRheinland CERTIFIED
www.tuv.com
ID 1111292548

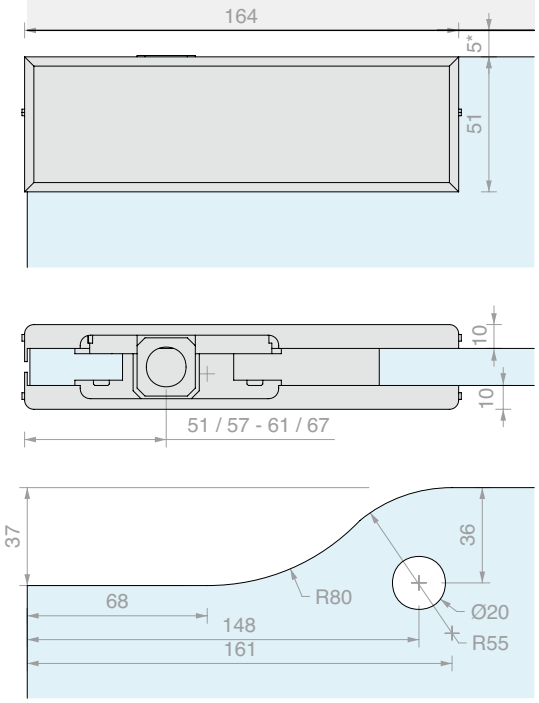

Art.	For glass	Qty
GF200	From **10** to **13.5** mm	1 Pc

TRANSOM HINGE GF400

Material: Aluminium body, stainless steel AISI 316 cover

Optional door stop Art. GL7200

Finish: /8 /15

Type Approved
Safety
Regular Production
Surveillance
TÜVRheinland
CERTIFIED
www.tuv.com
ID 111292548

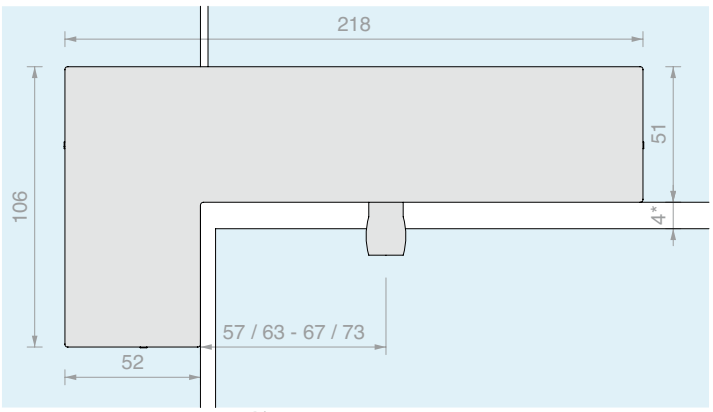

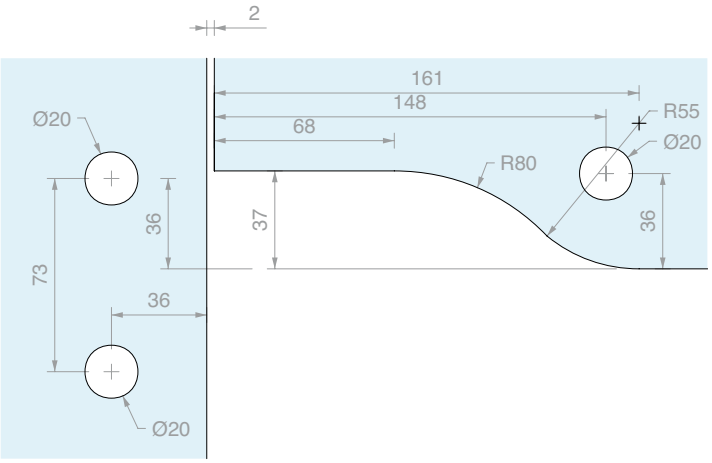

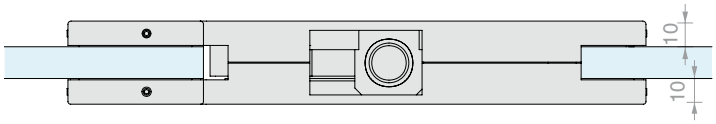

Art.	For glass	Qty
GF400	From **10** to **13.5** mm	1 Pc

WALL HINGE FOR TRANSOM GF210

Material: Aluminium body, stainless steel AISI 316 cover

Removable wall plate

Finish: /8 /15

Type Approved Safety Regular Production Surveillance

TÜVRheinland CERTIFIED

www.tuv.com ID 1111292548

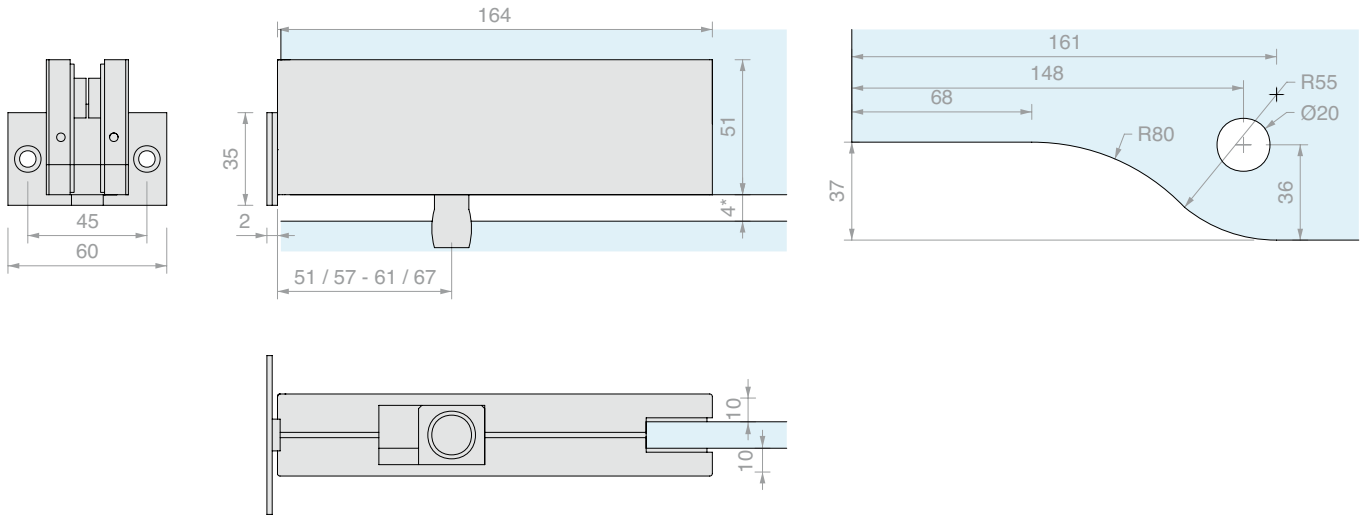

Art.	For glass	Qty
GF210	From **10** to **13.5** mm	1 Pc

L-CLAMP GF600

Material: Aluminium body, stainless steel AISI 316 cover

Supplied with door stop Art. GL7100

Finish: /8 /15

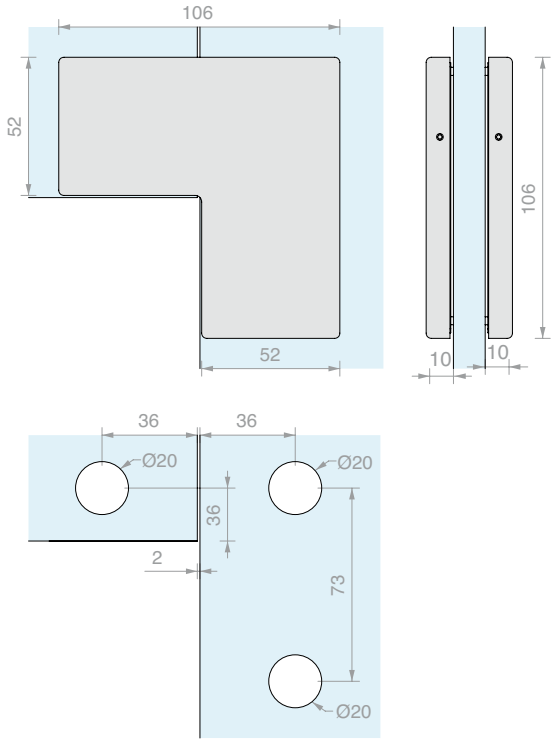

Art.	For glass	Qty
GF600	From **10** to **13.5** mm	1 Pc

STRAIGHT CLAMP GF700

Material: Aluminium body, stainless steel AISI 316 cover

Optional door stop Art. GL7100

Finish: /8 /15

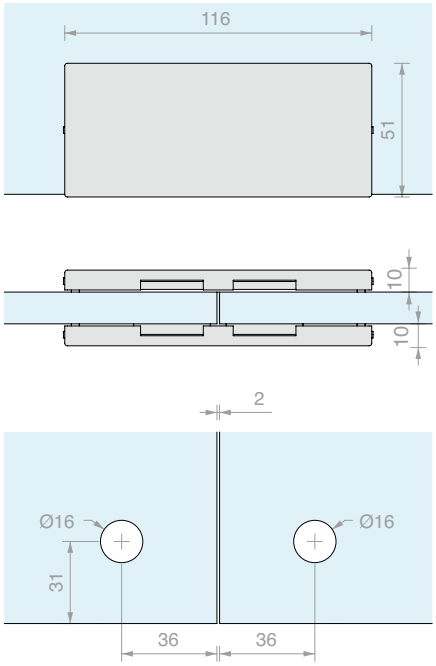

Art.	For glass	Qty
GF700	From **10** to **13.5** mm	1 Pc

CLAMP FOR FIXED GLASS GF150

Material: Aluminium body,
stainless steel AISI 316 cover
Finish: /8 /15

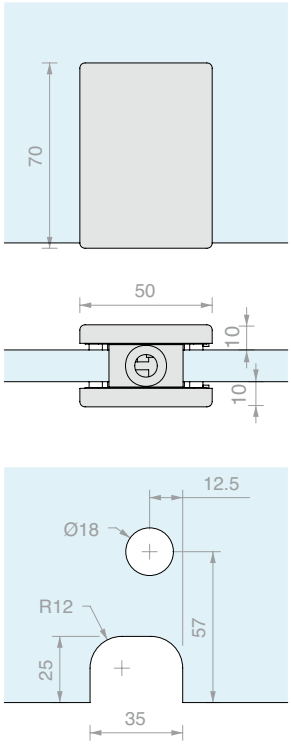

Art.	For glass	Qty
GF150	From **10** to **13.5** mm	1 Pc

CLAMP FOR FIXED GLASS WITH STOP GF150F

Material: Aluminium body,
stainless steel AISI 316 cover
Finish: /8 /15

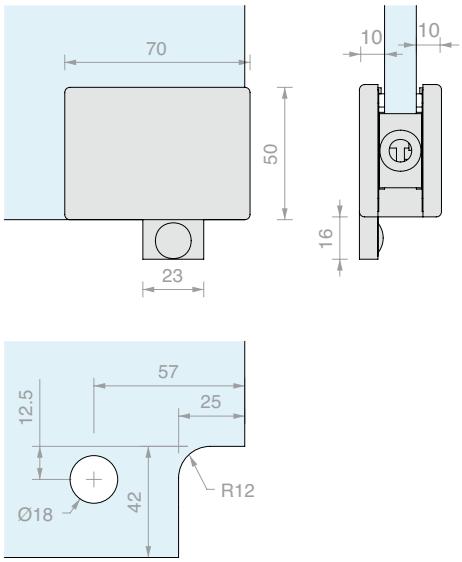

Art.	For glass	Qty
GF150F	From **10** to **13.5** mm	1 Pc

LOCK WITH RECTANGULAR PIN GL200

Material: Aluminium body,
stainless steel AISI 316 cover
With European cylinder, 3 keys
Finish: /8 /15

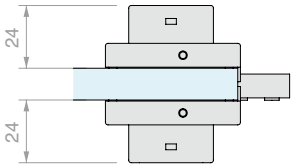

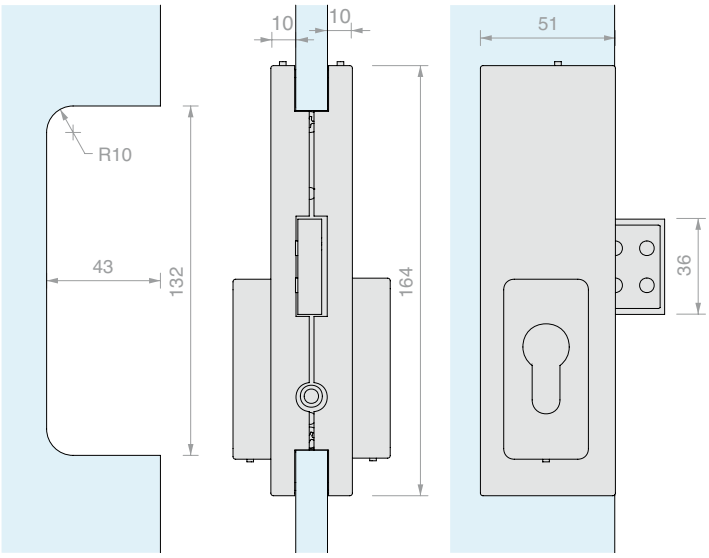

Art.	Lock	Key	For glass	Qty
GL200S	Lock + lock	Different	From **10** to **13.5** mm	1 Pc
GL200SU	Lock + lock	Single	From **10** to **13.5** mm	1 Pc
GL200P	Door knob + lock	Different	From **10** to **13.5** mm	1 Pc

LOCK CASE GK200

Material: Aluminium body,
stainless steel AISI 316 cover
Finish: /8 /15

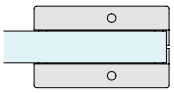

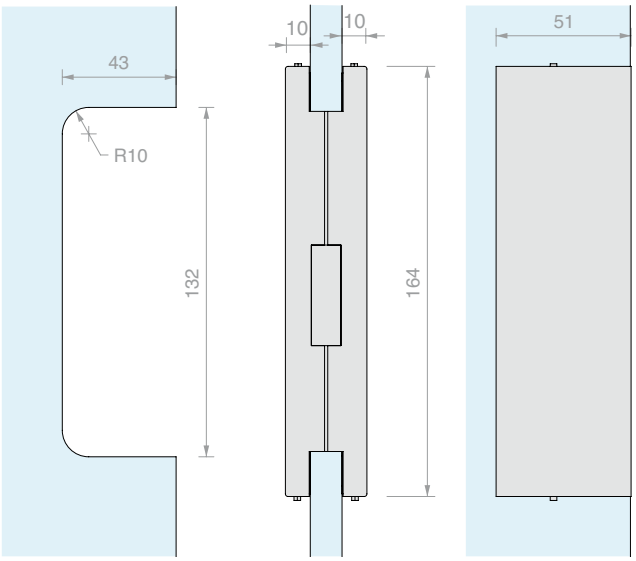

Art.	For glass	Qty
GK200	From **10** to **13.5** mm	1 Pc

BOLT GL800

Material: Aluminium body,
stainless steel AISI 316 cover
Finish: /8 /15

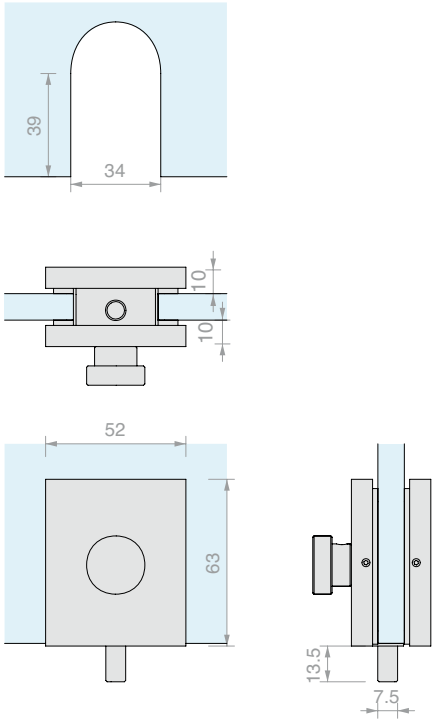

Art.	For glass	Qty
GL800	From **10** to **13.5** mm	1 Pc

STRIKING PLATE FOR BOLT GK800

Material: Aluminium body,
stainless steel AISI 316 cover
Finish: /8 /15

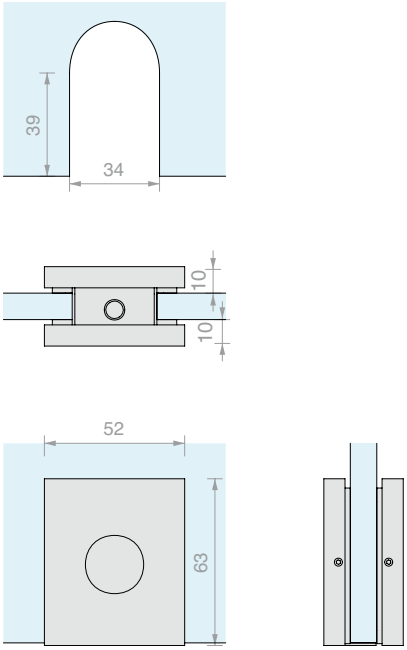

Art.	For glass	Qty
GK800	From **10** to **13.5** mm	1 Pc

DOOR STOP 100

Material: Die cast aluminium body, PVC
Compatible with Art. GF600 and GF700
Colour: black

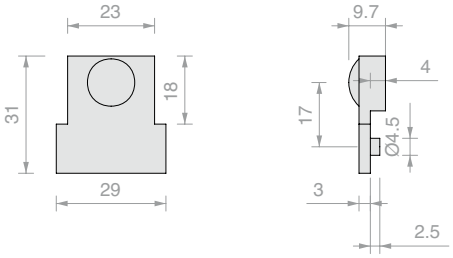

Art.	Qty
GL7100	1 Pc

DOOR STOP 200

Material: Die cast aluminium body, PVC
Compatible with Art. GF400
Colour: black

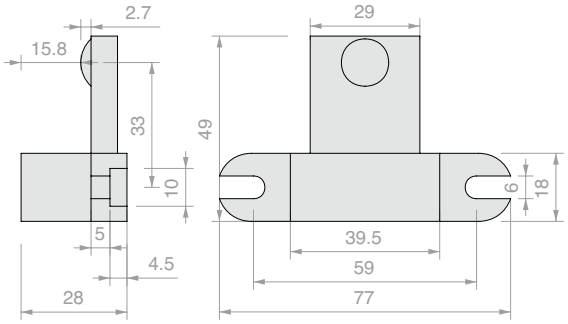

Art.	Qty
GL7200	1 Pc

ANTI-DUST SOCKET

Material: brass
Finish: /1 /3

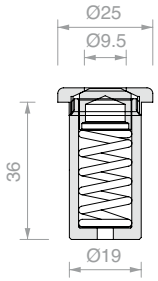

Art.	Qty
GL7300	1 Pc

INSERT FOR FRENCH AND ITALIAN PINS

Material: AISI 304 steel
Compatible with Art. GF100
Finish: /9

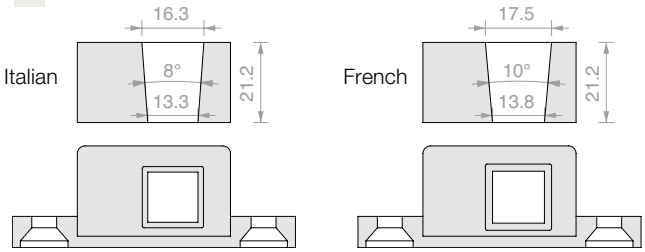

Art.	Fixing	Qty
GL7439	**Italian**	1 Pc
GL7433	**French**	1 Pc

FREE FLOOR PIN WITH PLATE

Material: AISI 304 steel

Comes with 3 screws for anchoring to the floor and a trim plate for the black plastic ferrule.

Finish: /8

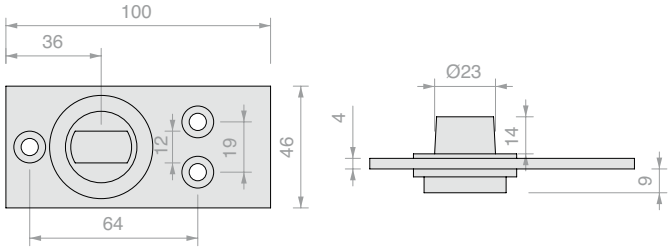

Art.	Fixing	Qty
PIVOTS014	**German**	1 Pc

FLOOR PIN ML

Material: Brass

Finish: /1 /3

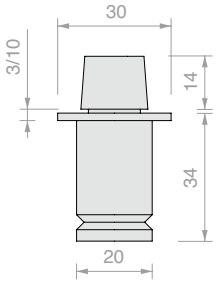

Art.	Fixing	Qty
GARDAML	**Italian**	1 Pc

FLOOR PIN TD

Material: Brass

Finish: /1 /3

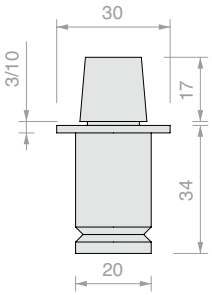

Art.	Fixing	Qty
GARDATD	**German**	1 Pc

FLOOR PIN HD3303

Material: Brass

Finish: /1 /3

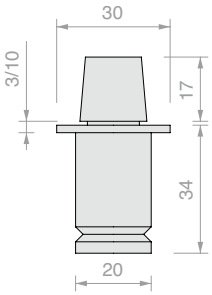

Art.	Fixing	Qty
HD3303	**French**	1 Pc

UPPER PLATE 8815

Material: AISI 304 steel

Finish: /9

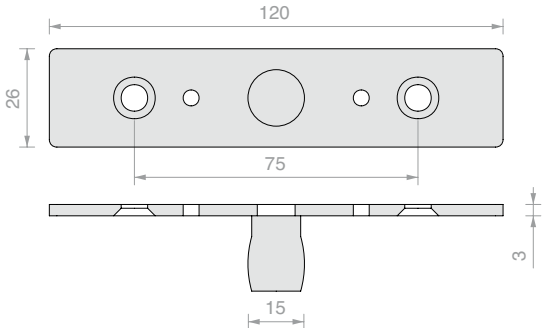

Art.	Qty
GL8815	1 Pc

CEILING FLUSH FIT PIN 8819

Material: Galvanised steel

Compatible with Art. GF200

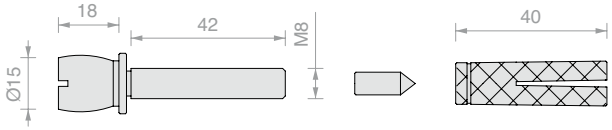

Art.	Qty
GL8819	1 Pc

FLOOR HOUSING GL8823

Material: AISI 304 stainless steel

Finish: /8 /15

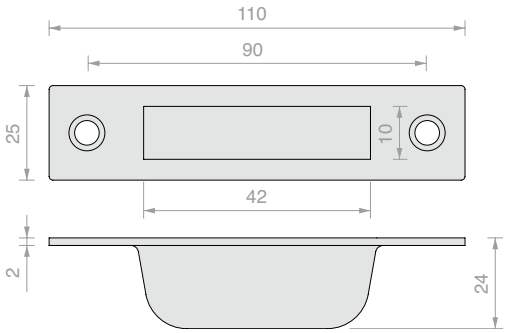

Art.	Qty
GL8823	1 Pc

WALL HOUSING GL8824

Material: AISI 304 steel

Finish: /9

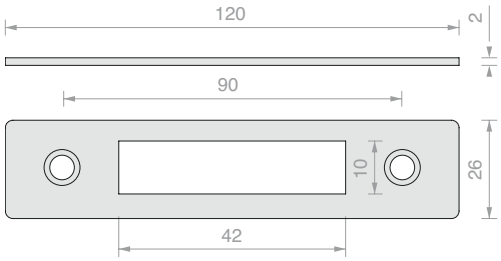

Art.	Qty
GL8824	1 Pc

LOCK LT500

Material: Aluminium body, stainless steel AISI 316 cover
With European cylinder with 3 keys
Includes wall plate
Finish: /8 /15

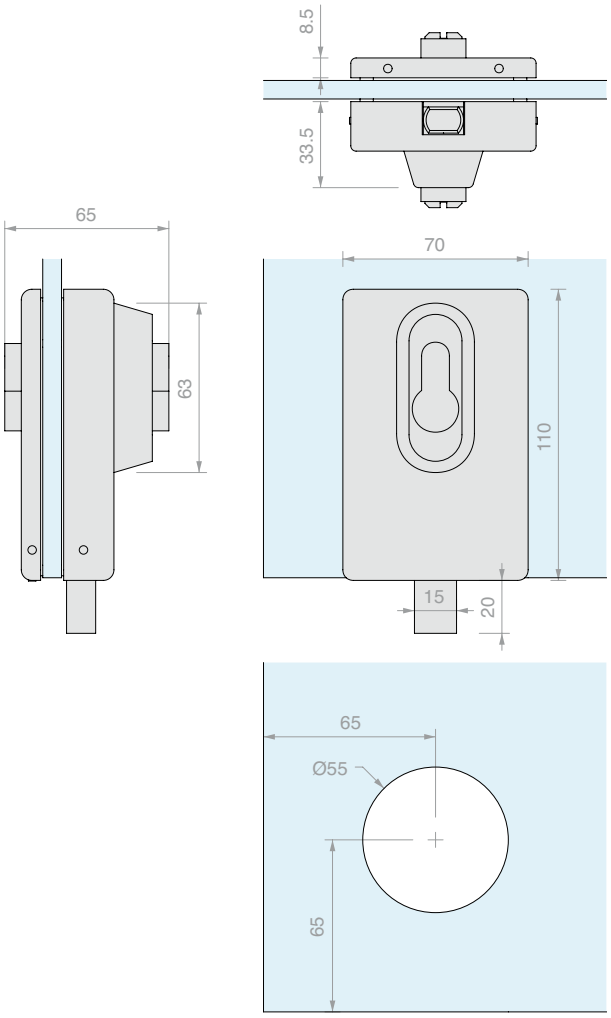

Art.	For glass	Key	Qty
GL10	From **8** to **12** mm	Different	1 Pc

LOCK CASE LT501

Material: Aluminium body, stainless steel AISI 316 cover
Finish: /8 /15

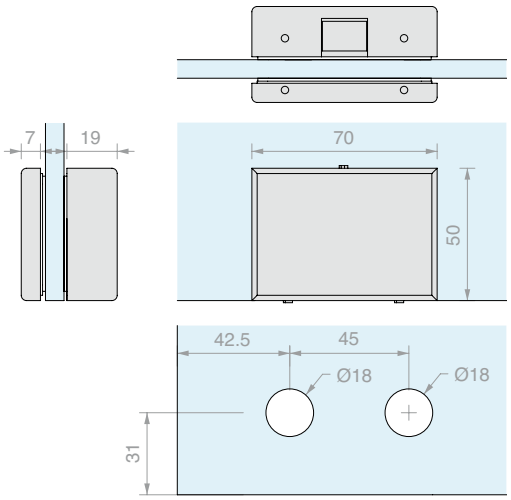

Art.	For glass	Qty
GL25	From **8** to **12** mm	1 Pc

UPPER HINGE WITH STUDS HS1010

Type Approved Safety Regular Production Surveillance
TÜVRheinland CERTIFIED
www.tuv.com ID 1111292548

Material: AISI 316 steel
Recommended glass hole size Ø24 mm
For ceiling mounting, requires socket Art. HS1010SPL
Finish: /9

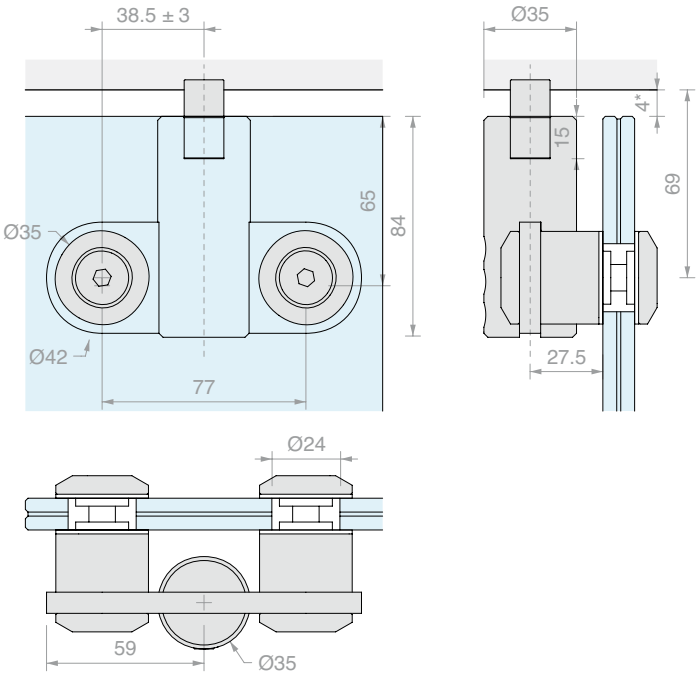

Art.	For glass	Qty
HS1010SB	From **8** to **21.5** mm	1 Pc

UPPER HINGE COUNTERSUNK HS1010

Type Approved Safety Regular Production Surveillance
TÜVRheinland CERTIFIED
www.tuv.com ID 1111292548

Material: AISI 316 steel
Recommended glass hole size Ø22 countersink 3 mm
For ceiling mounting, requires socket Art. HS1010SPL
Finish: /9

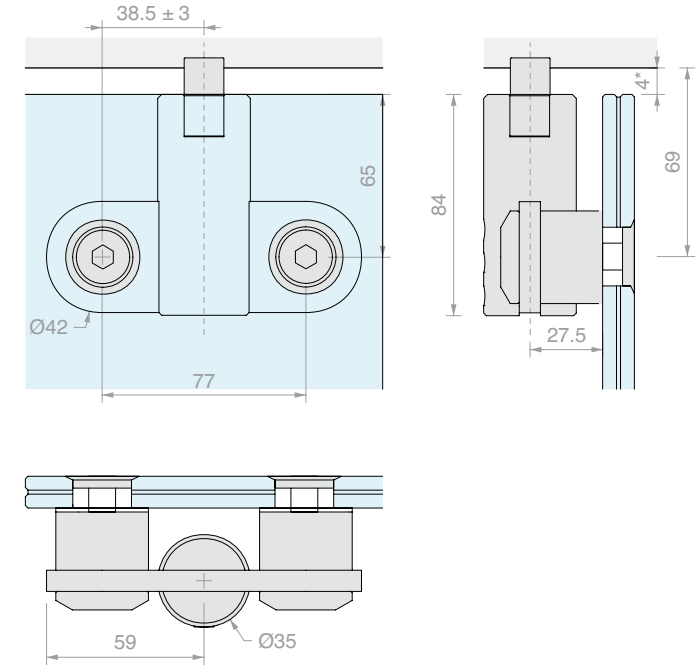

Art.	For glass	Qty
HS1010SS	From **8** to **21.5** mm	1 Pc

UPPER HINGE WITH STUDS HS1010 WITH ATTACHMENT FOR TRANSOM

Material: AISI 316 steel

Recommended glass hole size Ø24 mm

Finish: /9

Type Approved Safety Regular Production Surveillance
TÜVRheinland CERTIFIED
www.tuv.com ID 1111292548

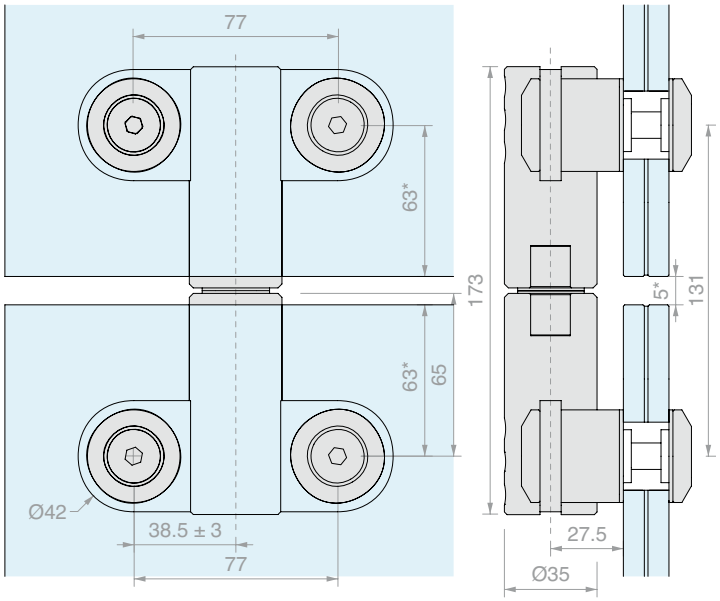

Art.	For glass	Qty
HS1010SSB	From **8** to **21.5** mm	1 Pc

UPPER HINGE COUNTERSUNK HS1010 WITH ATTACHMENT FOR TRANSOM

Material: AISI 316 steel

Recommended glass hole size Ø22 countersink 3 mm

Finish: /9

Type Approved Safety Regular Production Surveillance
TÜVRheinland CERTIFIED
www.tuv.com ID 1111292548

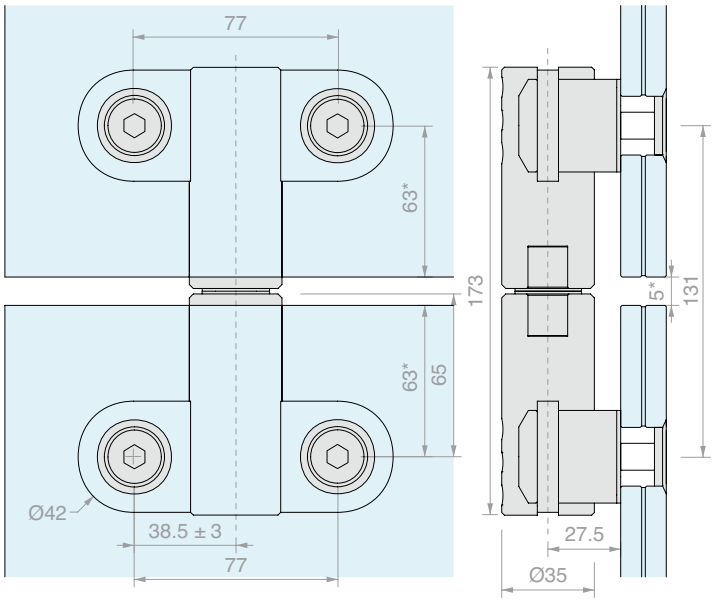

Art.	For glass	Qty
HS1010SSS	From **8** to **21.5** mm	1 Pc

LOWER HINGE WITH STUDS HS1010

Material: AISI 316 steel

Recommended glass hole size Ø24 mm

Finish: /9

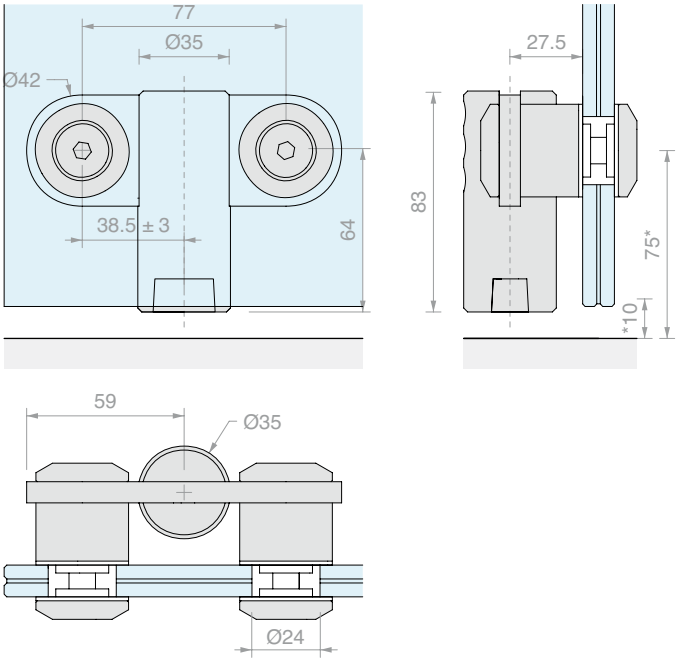

Art.	For glass	Fixing	Qty
HS1010PB	From **8** to **21.5** mm	**German**	1 Pc

LOWER HINGE COUNTERSUNK HS1010

Material: AISI 316 steel

Recommended glass hole size Ø22

countersink 3 mm

Finish: /9

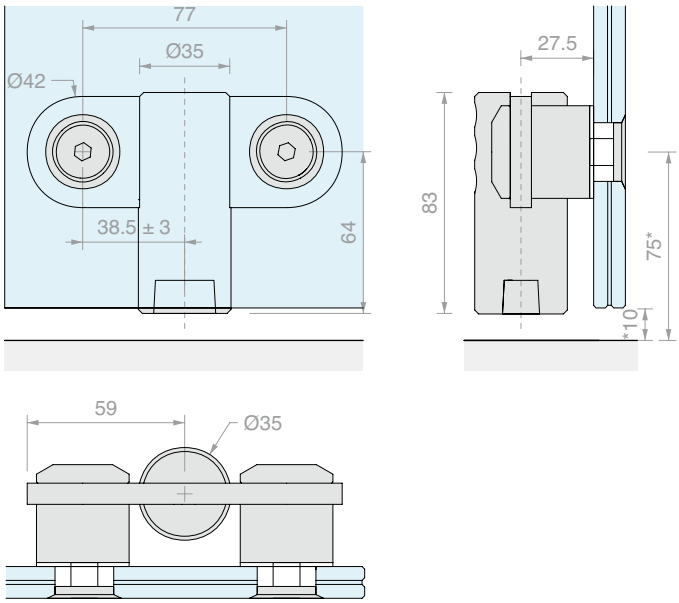

Art.	For glass	Fixing	Qty
HS1010PS	From **8** to **21.5** mm	**German**	1 Pc

LOWER HINGE CGS

Material: AISI 316 steel

Finish: /8 /15

Type Approved Safety Regular Production Surveillance
TÜVRheinland CERTIFIED
www.tuv.com ID 1111292548

EXTERNAL VIEW

FIXING WITHIN THE GLASS

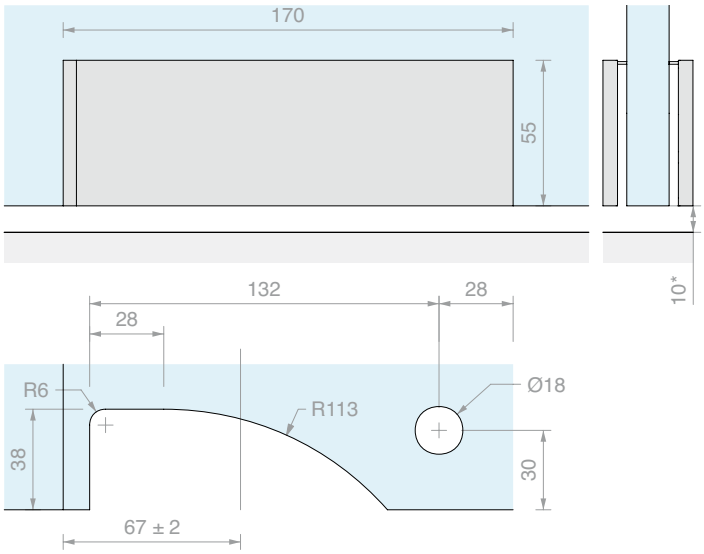

FIXING FLUSH WITH THE GLASS

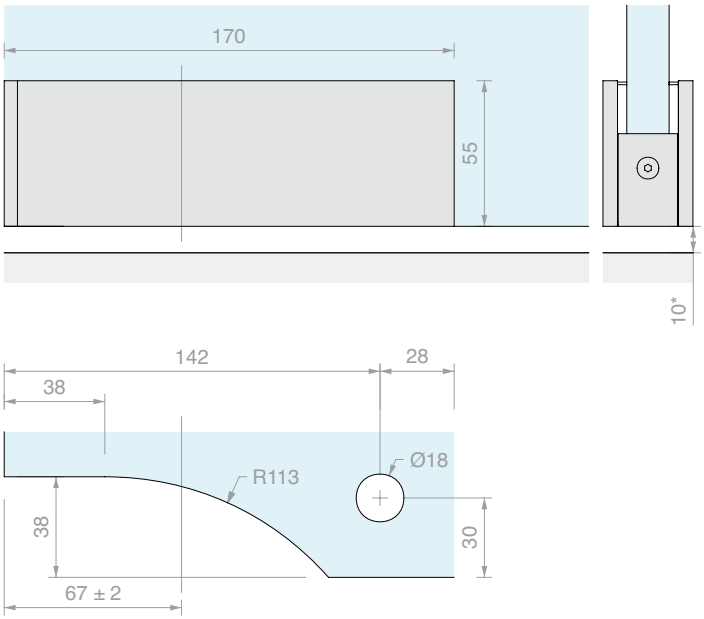

Art.	For glass	Fixing	Qty
CGS1620SX	From **15** to **21.5** mm	**German**	1 Pc
CGS1620DX	From **15** to **21.5** mm	**German**	1 Pc

UPPER HINGE CGS

Material: AISI 316 steel

For ceiling mounting, requires socket

Art. HS1010SPL

Finish: /8 /15

Type Approved Safety Regular Production Surveillance

TÜVRheinland CERTIFIED

www.tuv.com ID 1111292548

EXTERNAL VIEW

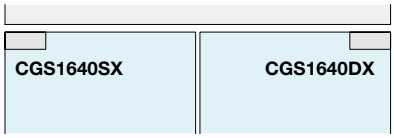

FIXING WITHIN THE GLASS

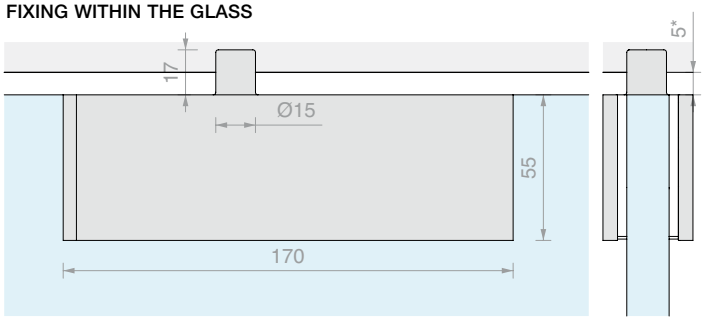

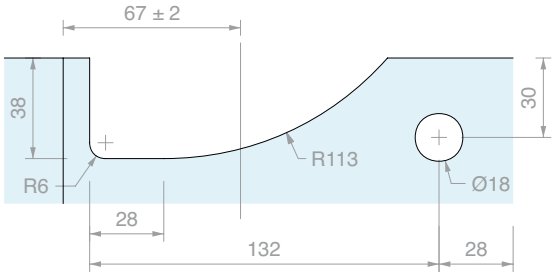

FIXING FLUSH WITH THE GLASS

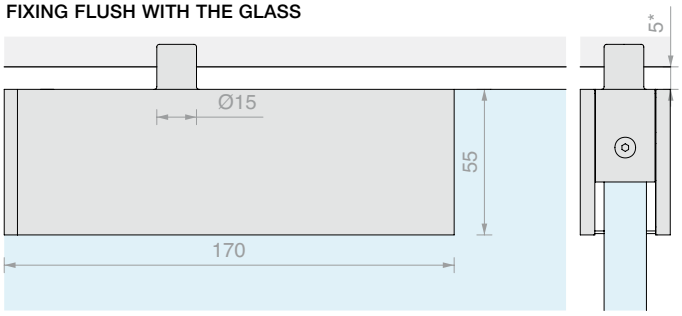

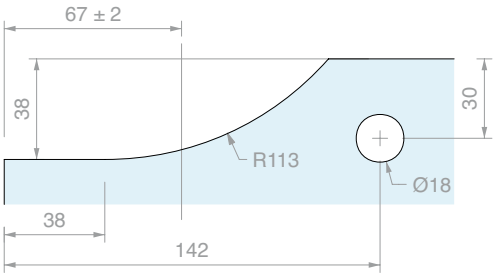

Art.	For glass	Qty
CGS1640SX	From **15** to **21.5** mm	1 Pc
CGS1640DX	From **15** to **21.5** mm	1 Pc

SGS LOCK

Material: Brass

With European cylinder, 3 keys

Pivot Ø 10 x L.18 mm

Finish: /1 /24

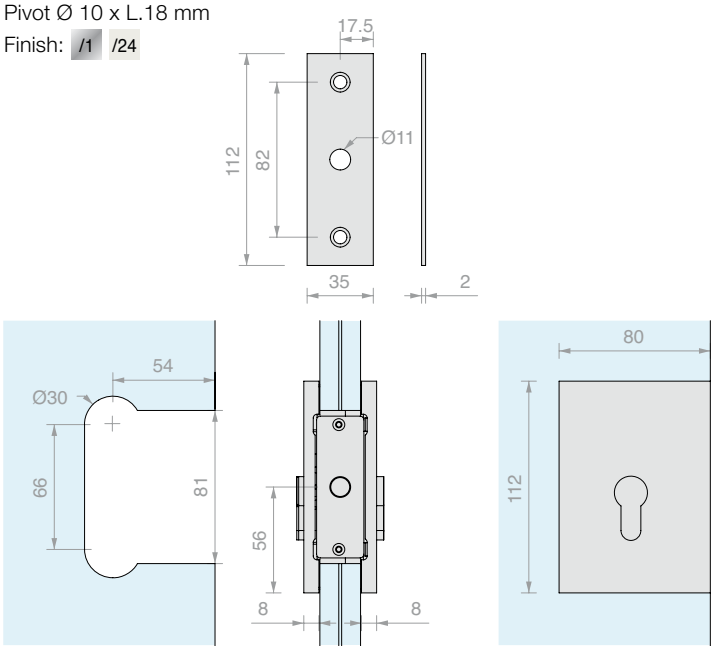

Art.	For glass	Key	Qty
SGS2115U	**15** mm	Single	1 Pc
SGS2115D	**15** mm	Different	1 Pc
SGS2117U	**17** mm	Single	1 Pc
SGS2117D	**17** mm	Different	1 Pc
SGS2121U	**21** mm	Single	1 Pc
SGS2121D	**21** mm	Different	1 Pc

LOCK WITH SGS HANDLE

Material: Brass

With European cylinder, 3 keys

Pivot Ø 10 x L.18 mm

Finish: /1 /24

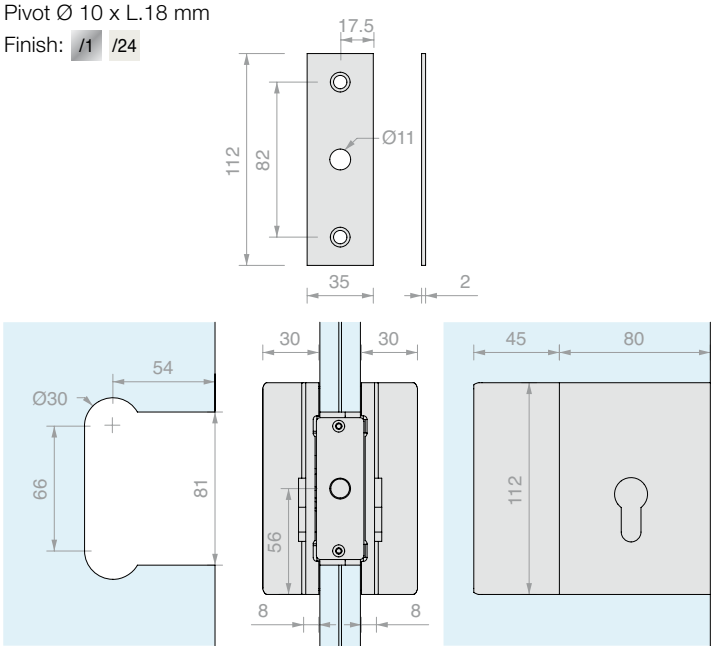

Art.	For glass	Key	Qty
SGS2315MU	**15** mm	Single	1 Pc
SGS2315MD	**15** mm	Different	1 Pc
SGS2317MU	**17** mm	Single	1 Pc
SGS2317MD	**17** mm	Different	1 Pc
SGS2321MU	**21** mm	Single	1 Pc
SGS2321MD	**21** mm	Different	1 Pc

SGS GLASS STRIKE PLATE

Material: Brass

Finish: /1 /24

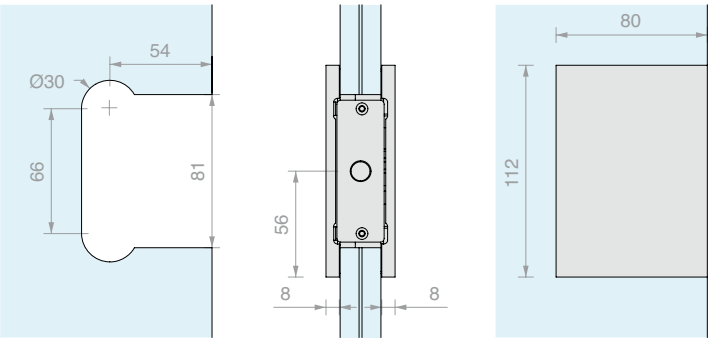

Art.	For glass	Qty
SGS2715M	**15** mm	1 Pc
SGS2717M	**17** mm	1 Pc
SGS2721M	**21** mm	1 Pc

WALL PLATE WITH STOP

Material: Brass

Finish: /1 /24

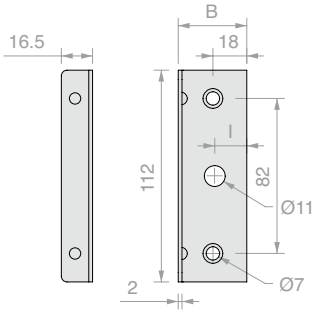

Art.	For glass	l	B	Qty
SGS15L	**15** mm	**16** mm	**36.5** mm	1 Pc
SGS17L	**17** mm	**17** mm	**39** mm	1 Pc
SGS21L	**21** mm	**19** mm	**43** mm	1 Pc

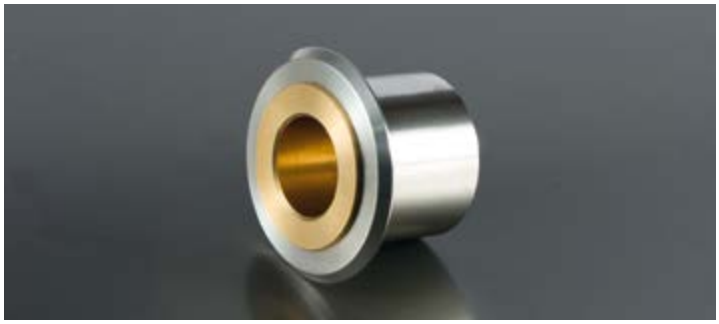

UPPER SOCKET

Material: AISI 316 steel

Finish: /9

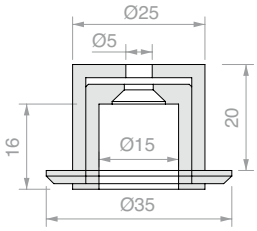

Art.	Qty
HS1010SPL	1 Pc

FREE FLOOR PIN WITH PLATE

Material: AISI 304 steel

Comes with 3 screws for anchoring to the floor and a trim plate for the black plastic ferrule.

Finish: /8

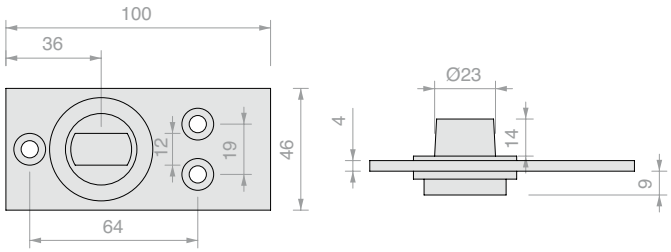

Art.	Fixing	Qty
PIVOTS014	**German**	1 Pc

UPPER HINGE WITH ADJUSTABLE SLIDER 3301

Material: Brass

For ceiling mounting, requires socket Art. HD3304

Finish: /1 /24

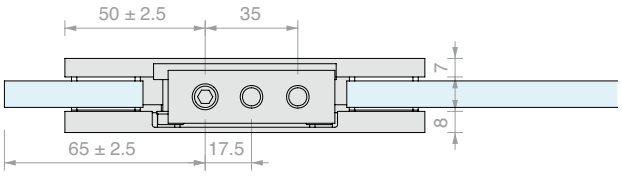

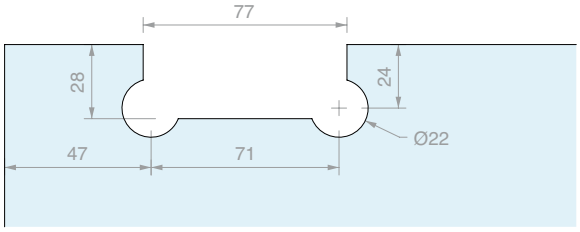

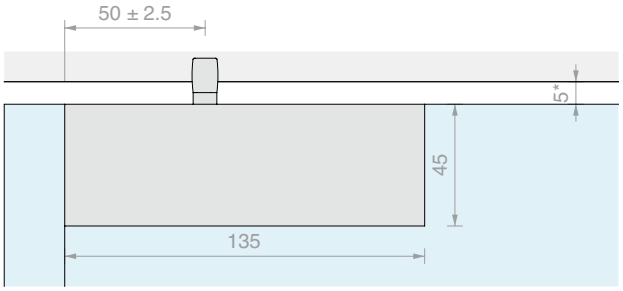

Art.	For glass	Qty
HD3301	From **8** to **10** mm	1 Pc

LOWER HINGE HD3301

Material: Brass

Finish: /1 /24

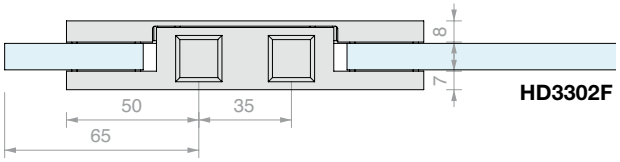

HD3302F

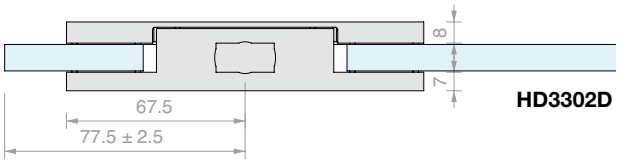

HD3302D

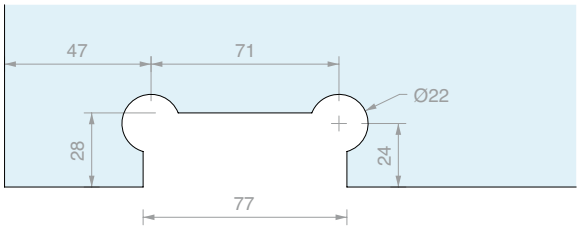

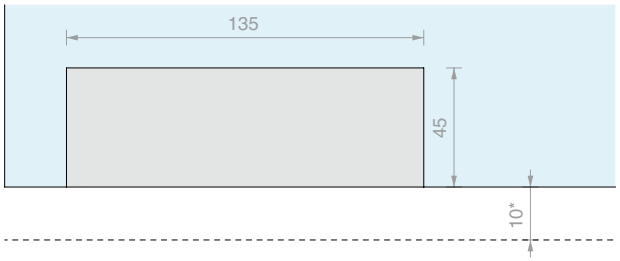

Art.	For glass	Fixing	Qty
HD3302F	From **8** to **10** mm	**French**	1 Pc
HD3302D	From **8** to **10** mm	**German**	1 Pc

FIXING FOR TRANSOM WITH SIDE GLASS FIXING 3307

Material: Brass

Finish: /1 /24

Type Approved Safety Regular Production Surveillance
TÜVRheinland CERTIFIED
www.tuv.com ID 1111292548

Left fitting

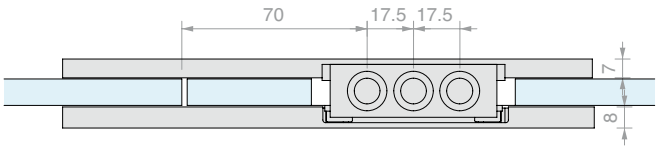

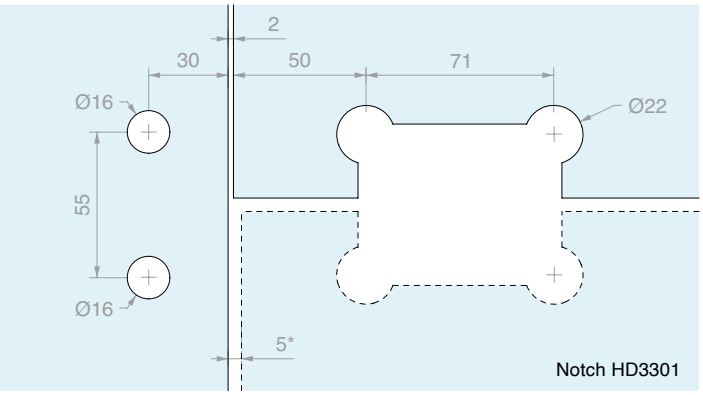

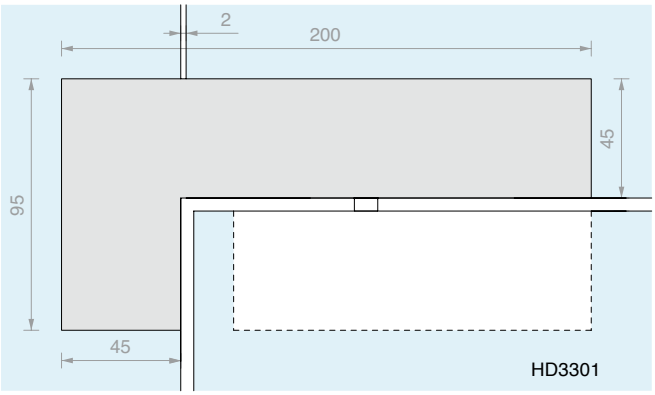

Art.	For glass	Fitting	Qty
HD3307SX	From **8** to **10** mm	Left	1 Pc
HD3307DX	From **8** to **10** mm	Right	1 Pc

FIXING FOR TRANSOM WITH SIDE WALL FIXING 3308

Material: Brass

Finish: /1 /24

Type Approved Safety Regular Production Surveillance
TÜVRheinland CERTIFIED
www.tuv.com ID 1111292548

Left fitting

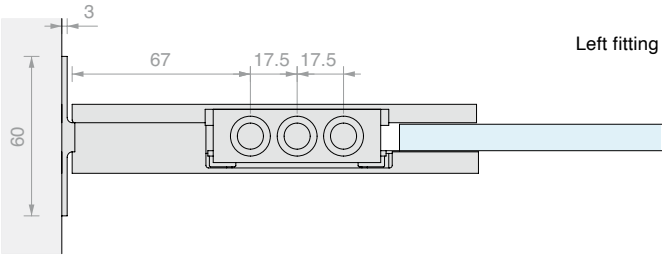

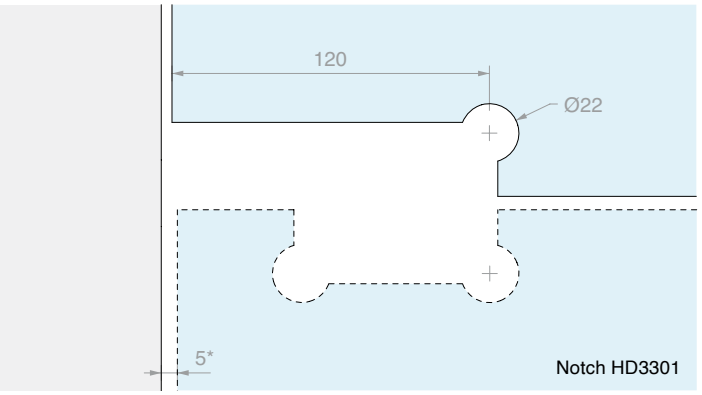

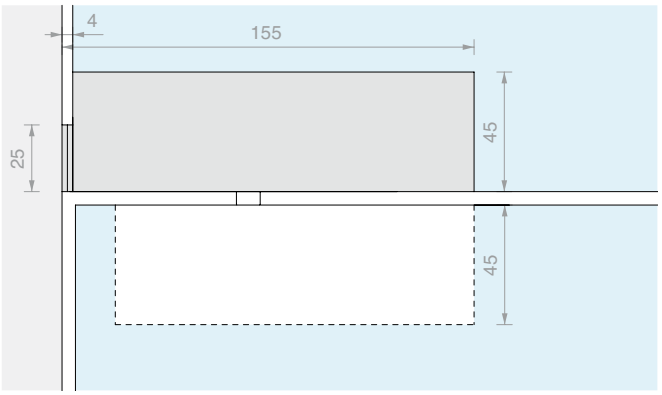

Art.	For glass	Fitting	Qty
HD3308SX	From **8** to **10** mm	Left	1 Pc
HD3308DX	From **8** to **10** mm	Right	1 Pc

LOCK 3305

Material: Brass
Pivot Ø10 x L 17 mm.
With European cylinder, 3 keys
Finish: /1 /24

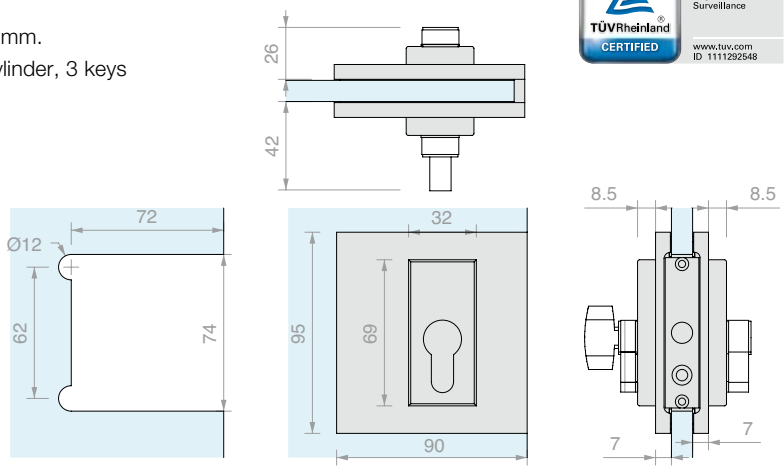

Art.	For glass	Lock	Key	Qty
HD3305U	From **8** to **10** mm	Lock + lock	Single	1 Pc
HD3305D	From **8** to **10** mm	Lock + lock	Different	1 Pc
HD3305P	From **8** to **10** mm	Door knob + lock	Single	1 Pc

HD SQUARE BOLT

Material: Aluminium body, brass cover
Pivot Ø7.5 x L 13 mm.
Finish: /1 /24

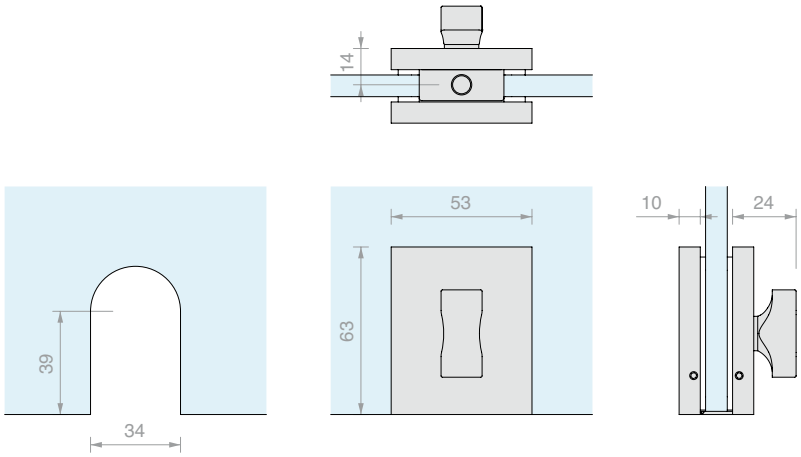

Art.	For glass	Qty
DQC63	From **10** to **12** mm	1 Pc

GLASS STRIKE PLATE FOR HD SQUARE BOLT

Material: Brass
Finish: /1 /24

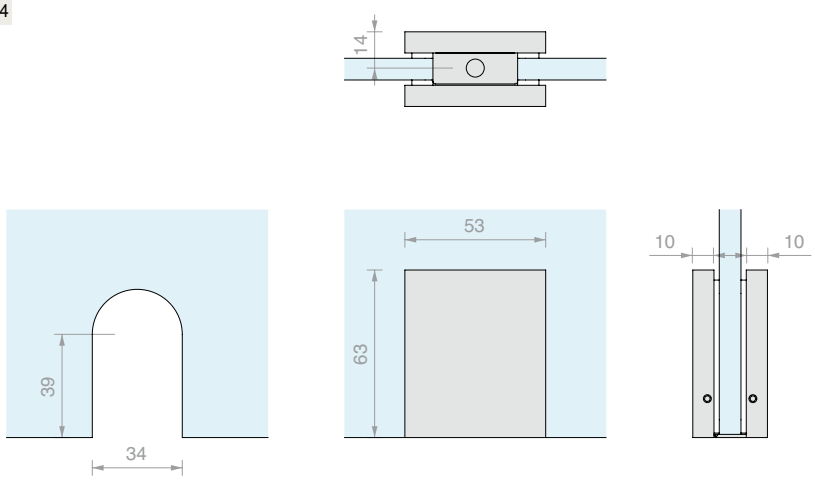

Art.	For glass	Qty
DQC65	From **10** to **12** mm	1 Pc

SINGLE STRIKE PLATE FOR TRANSOM FIXING FOR BOLT

Material: Brass

Compatible with Art. DQC63

Finish: /1 /24

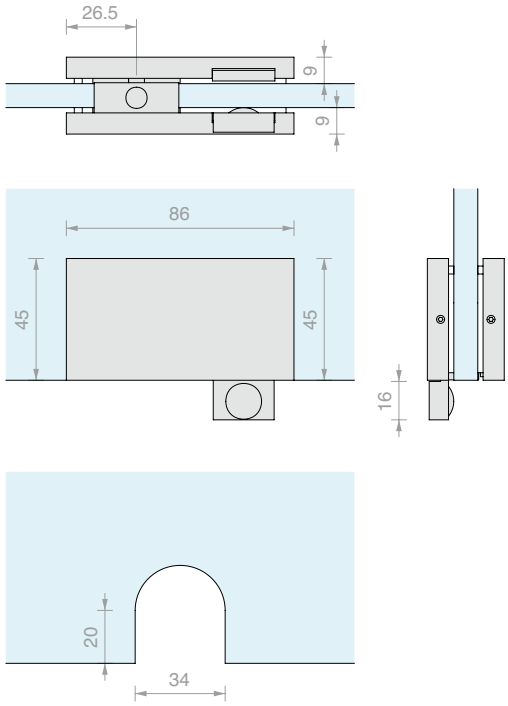

Art.	For glass	Qty
HD3309	From **8** to **12** mm	1 Pc

DOUBLE STRIKE PLATE FOR TRANSOM FITTING FOR BOLT

Material: Brass

Compatible with Art. DQC63

Finish: /1 /24

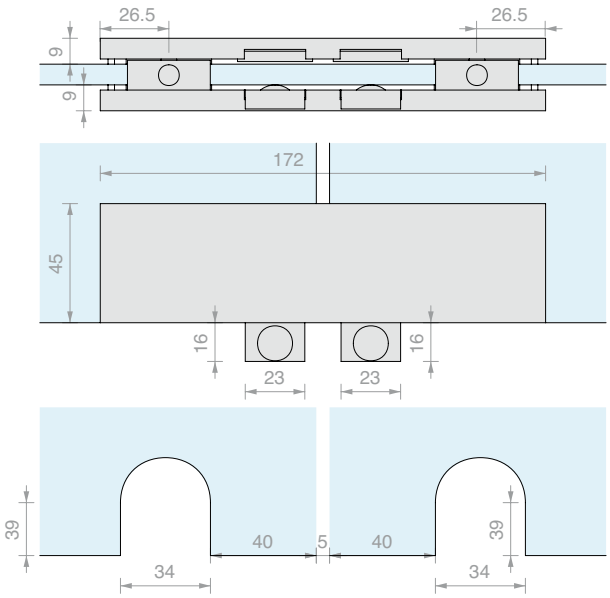

Art.	For glass	Qty
HD3310	From **8** to **12** mm	1 Pc

WALL STRIKE PLATE FOR LOCK HD3305

Material: Stainless steel

Finish: /9

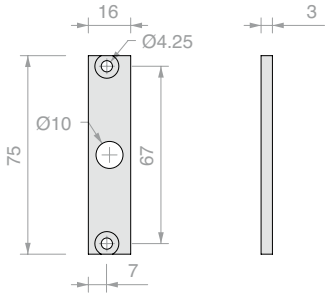

Art.	Q.ty
HD3306	1 Pc

FLOOR PIN HD3303

Material: Brass

Finish: /1 /3

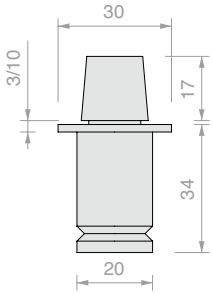

Art.	Fixing	Qty
HD3303	**French**	1 Pc

SEAT FOR CEILING PIVOT 3304

Material: Brass

Finish: /1 /3

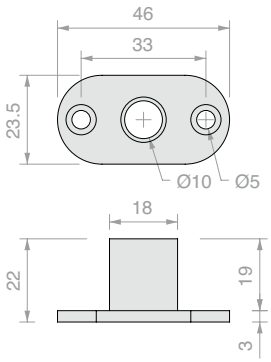

Art.	Q.ty
HD3304	1 Pc

ANTI-DUST SOCKET FOR LOCK HD3305

Material: Brass

Finish: /1 /3

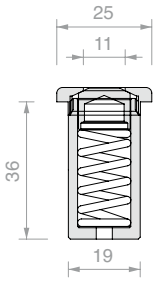

Art.	Q.ty
GL7311	1 Pc

SLIDER FOR HD3308

Material: Brass

Slider for moving the fixing of Art. HD3308 from flush to inside the glass

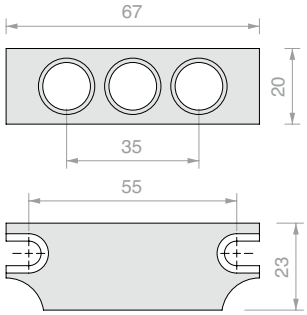

Art.	Qty
HD3308-SLIDER	1 Pc

CYLINDER WITH ROTATING DOOR KNOB

Material: Brass

European cylinder with 3 keys

Finish: /1 /3 /45

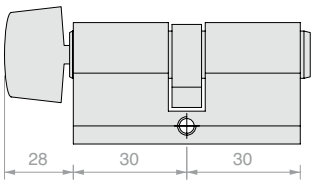

Art.	Key	Qty
S1217U	Single	1 Pc

CYLINDER WITH EUROPEAN PROFILE KEY

Material: Brass

European cylinder with 3 keys

Finish: /1 /3

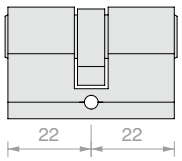

Art.	Key	Qty
LOGS10U	Single	1 Pc
LOGS10D	Different	1 Pc

SNAP-ON PIVOT HINGE 80SQ WITH HIDDEN SCREWS

Material: Brass

Finish: /1 /2 /3

Type Approved
Safety
Regular Production Surveillance
www.tuv.com
ID 1111292548

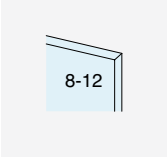

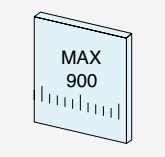

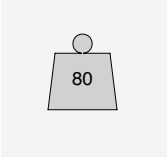

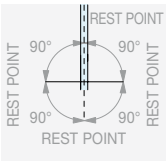

360° ROTATION

NO VISIBLE SCREWS

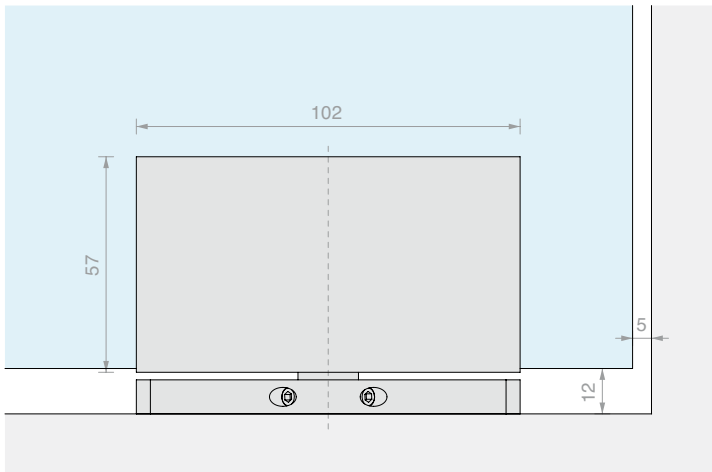

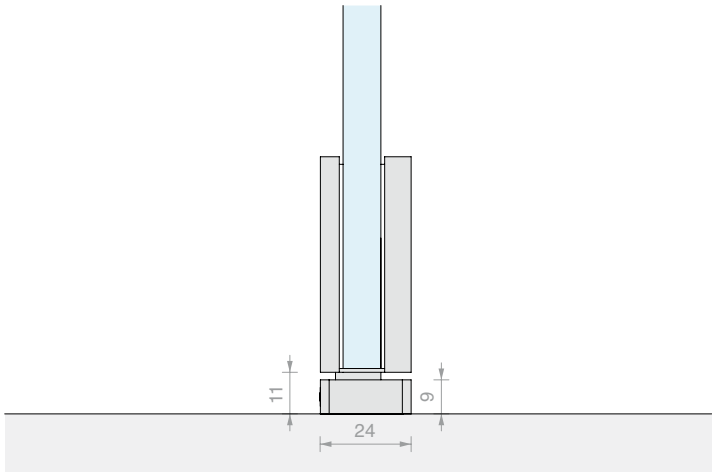

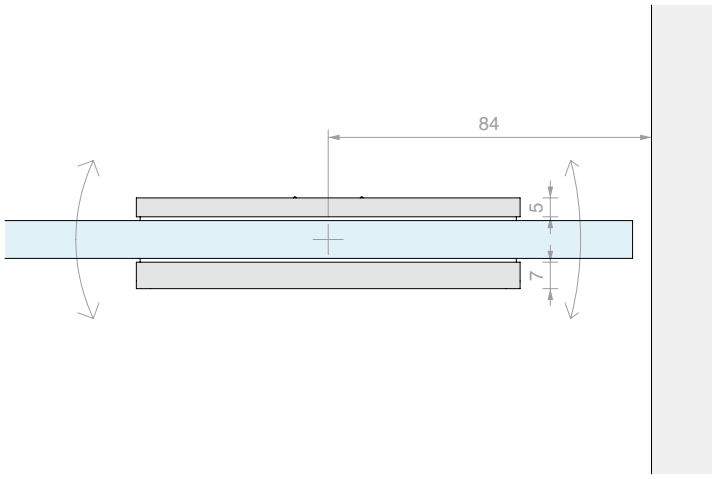

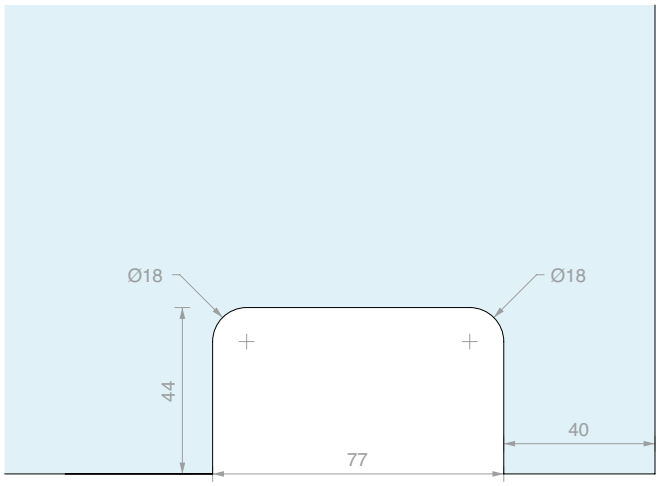

Art.	For glass	Qty
CERPT80SQ	From **8** to **12** mm	1 Pc

SNAP PIVOT HINGE 80

Material: Brass

Finish: /1 /2 /3

Type Approved
Safety
Regular Production
Surveillance
TÜVRheinland CERTIFIED
www.tuv.com
ID 1111292548

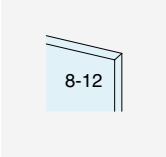

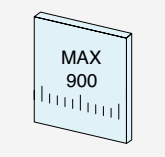

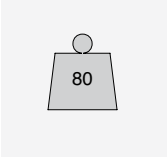

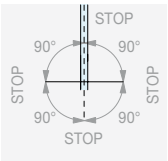

360° ROTATION

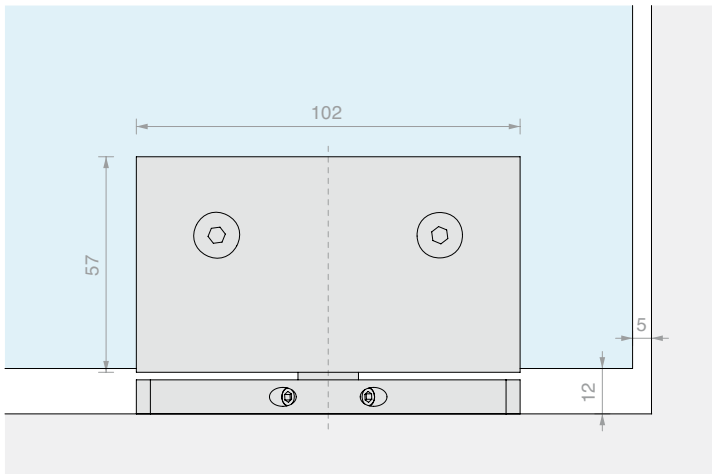

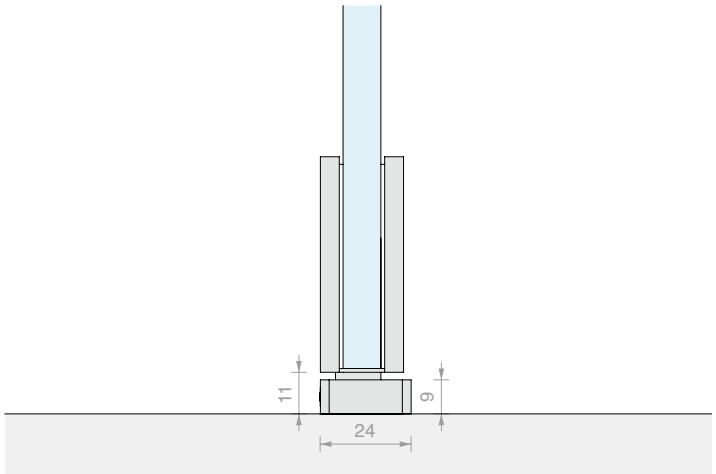

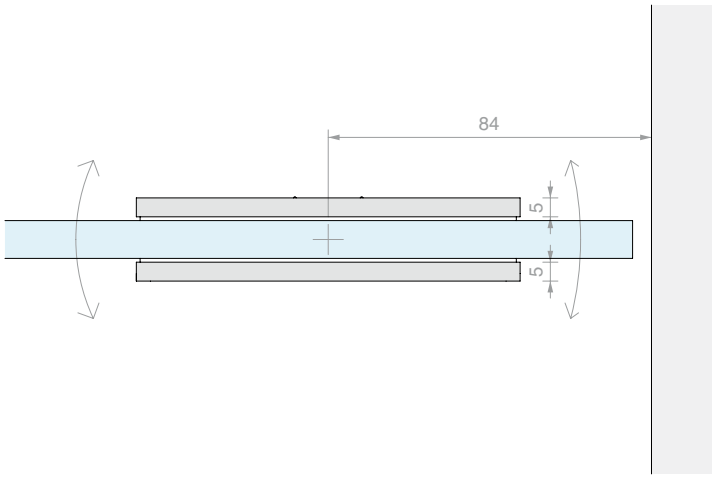

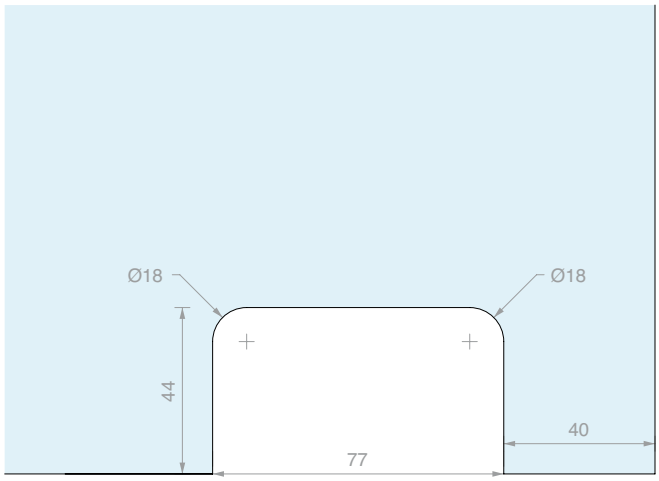

Art.	For glass	Qty
CERPT80	From **8** to **12** mm	1 Pc

DOOR CLOSER LM60

Plate material: AISI 316 stainless steel

The hydraulic floor-mounted door closers in the LM60 series have undergone laboratory tests in accordance with EN1154. The tests include checks on closing force and capacity, durability over 500,000 opening and closing cycles, corrosion resistance and operating temperature.

NOTE: it is recommended not to fully unscrew or tighten the speed regulation valves

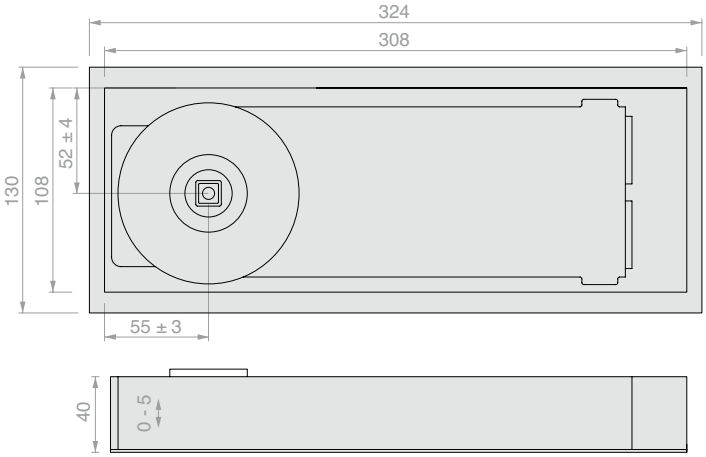

Properties:

- Rotation ±130°
- Dual regulation of closing speed 130° - 15° and 15° - 0°.
- Three-dimensional adjustment within the case
- 3 closing forces: EN2, EN3 and EN4
- 3 types of use according to the hold open position: ± 90°, ± 105° or no hold open.
- Available with 3 types of standard pivot: German, Italian or French.

Finish: /8

Art.	Force	Capacity L	Capacity P	Hold open	Pivot	Qty
LM609020DE	**EN2**	**850** mm	**60** kg	**± 90°**	**German**	1 Pc
LM609020IT	**EN2**	**850** mm	**60** kg	**± 90°**	**Italian**	1 Pc
LM609020FR	**EN2**	**850** mm	**60** kg	**± 90°**	**French**	1 Pc
LM609025DE	**EN3**	**950** mm	**80** kg	**± 90°**	**German**	1 Pc
LM609025IT	**EN3**	**950** mm	**80** kg	**± 90°**	**Italian**	1 Pc
LM609025FR	**EN3**	**950** mm	**80** kg	**± 90°**	**French**	1 Pc
LM6010525DE	**EN3**	**950** mm	**80** kg	**± 105°**	**German**	1 Pc
LM6010525IT	**EN3**	**950** mm	**80** kg	**± 105°**	**Italian**	1 Pc
LM6010525FR	**EN3**	**950** mm	**80** kg	**± 105°**	**French**	1 Pc
LM600025DE	**EN3**	**950** mm	**80** kg	**Hold open**	**German**	1 Pc
LM600025IT	**EN3**	**950** mm	**80** kg	**Hold open**	**Italian**	1 Pc
LM600025FR	**EN3**	**950** mm	**80** kg	**Hold open**	**French**	1 Pc
LM609033DE	**EN4**	**1100** mm	**100** kg	**± 90°**	**German**	1 Pc
LM609033IT	**EN4**	**1100** mm	**100** kg	**± 90°**	**Italian**	1 Pc
LM609033FR	**EN4**	**1100** mm	**100** kg	**± 90°**	**French**	1 Pc
LM6010533DE	**EN4**	**1100** mm	**100** kg	**± 105°**	**German**	1 Pc
LM6010533IT	**EN4**	**1100** mm	**100** kg	**± 105°**	**Italian**	1 Pc
LM6010533FR	**EN4**	**1100** mm	**100** kg	**± 105°**	**French**	1 Pc

DOOR CLOSER LM66

Plate material: AISI 316 stainless steel

The hydraulic floor-mounted door closers in the LM60 series have undergone laboratory tests in accordance with EN1154. The tests include checks on closing force and capacity, durability over 500,000 opening and closing cycles, corrosion resistance and operating temperature.

NOTE: it is recommended not to fully unscrew or tighten the speed regulation valves

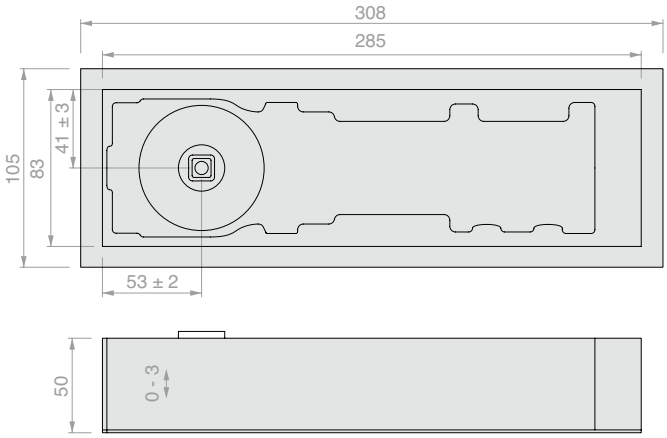

Properties:

- Rotation ±180°
- Dual regulation of closing speed 180° - 15° and 15° - 0°.
- Three-dimensional adjustment within the case
- 3 closing forces: EN2, EN3 and EN4
- 2 types of use according to the hold open position: ± 90° or no hold open.
- Available with 3 types of standard pivot: German, Italian or French.

Finish: /8

Art.	Force	Capacity L	Capacity P	Hold open	Pivot	Qty
LM669020DE	**EN2**	**850** mm	**100** kg	**± 90°**	**German**	1 Pc
LM669020IT	**EN2**	**850** mm	**100** kg	**± 90°**	**Italian**	1 Pc
LM669020FR	**EN2**	**850** mm	**100** kg	**± 90°**	**French**	1 Pc
LM669030DE	**EN3**	**950** mm	**150** kg	**± 90°**	**German**	1 Pc
LM669030IT	**EN3**	**950** mm	**150** kg	**± 90°**	**Italian**	1 Pc
LM669030FR	**EN3**	**950** mm	**150** kg	**± 90°**	**French**	1 Pc
LM669040DE	**EN4**	**1100** mm	**200** kg	**± 90°**	**German**	1 Pc
LM669040IT	**EN4**	**1100** mm	**200** kg	**± 90°**	**Italian**	1 Pc
LM669040FR	**EN4**	**1100** mm	**200** kg	**± 90°**	**French**	1 Pc
LM660040DE	**EN4**	**1100** mm	**200** kg	**Hold open**	**German**	1 Pc
LM660040IT	**EN4**	**1100** mm	**200** kg	**Hold open**	**Italian**	1 Pc
LM660040FR	**EN4**	**1100** mm	**200** kg	**Hold open**	**French**	1 Pc

INTERCHANGEABLE PINS FOR DOOR CLOSER LM

Pivot with screw

Art.	Fixing	Qty
LMPERNOD	**German**	1 Pc
LMPERNOI	**Italian**	1 Pc
LMPERNOF	**French**	1 Pc

PLATE FOR DOOR CLOSER LM60

Material: AISI 316 stainless steel

Finish: /8

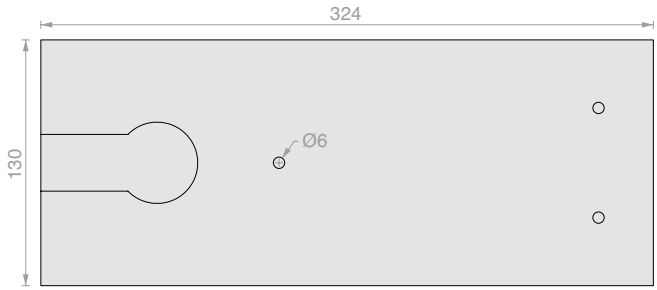

Art.	Dimensions	Qty
LMPIA01	**324** mm x **130** mm	1 Pc

PLATE FOR DOOR CLOSER LM66

Material: AISI 316 stainless steel

Finish: /8

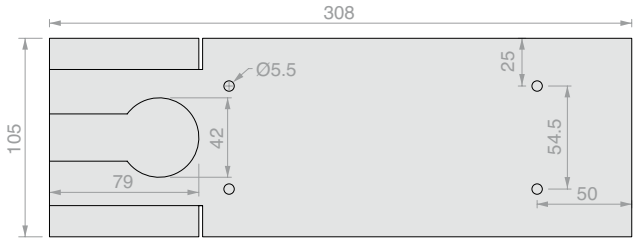

Art.	Dimensions	Qty
LMPIA02	**308** mm x **105** mm	1 Pc

UPPER ADJUSTABLE POCKET HINGE FOR WOOD/METAL DOOR PANELS

Material: AISI 304 stainless steel, galvanised steel

Finish: /8

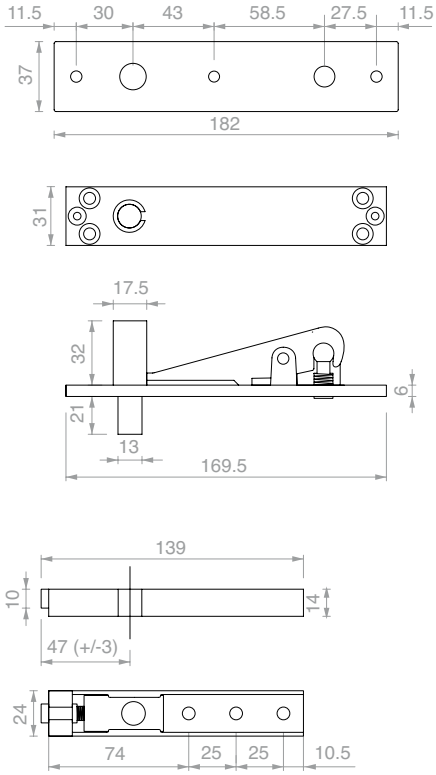

Art.	Capacity L	Capacity P	Qty
PS03	**1200** mm	**150** kg	1 Pc

LOWER HINGE WITH GERMAN PIN FOR WOOD/METAL DOORS

Material: Galvanised steel

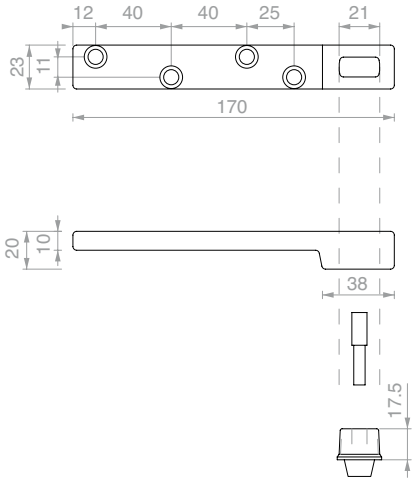

Art.	Capacity L	Capacity P	Qty
PI07	**1200** mm	**150** kg	1 Pc

TS 500 NV

Floor-mounted door closer for hinged and swing doors

The exceptionally low height of just 42 mm is one of the benefits that the TS 500 NV door closer offers to users and designers for operating single and double door panels. These properties make it an ideal choice for both new buildings and for renovations. By virtue of being invisible, it is perfect for glass doors, including small and medium-sized ones. The maximum weight is 150 kg; includes a brushed stainless steel plate.
The TS500 NV model has been tested for 500,000 opening and closing cycles.

Properties:

- Height 42 mm
- Adjustable force between EN1 and EN4 according to EN1154
- Adjustable closing speed and final stroke
- Safety valve to prevent overloads
- Closing action from around 170°
- Adjustment tolerance: height 6 mm, width 10 mm, length 10 mm
- Galvanised cement case
- Thermostabilised valves avoid switching between summer and winter
- Suitable for doors with single and double opening action
- 2 types of use according to the hold open position: ± 90°, ± 110°
- **German pivot** (Italian pivot available on request).

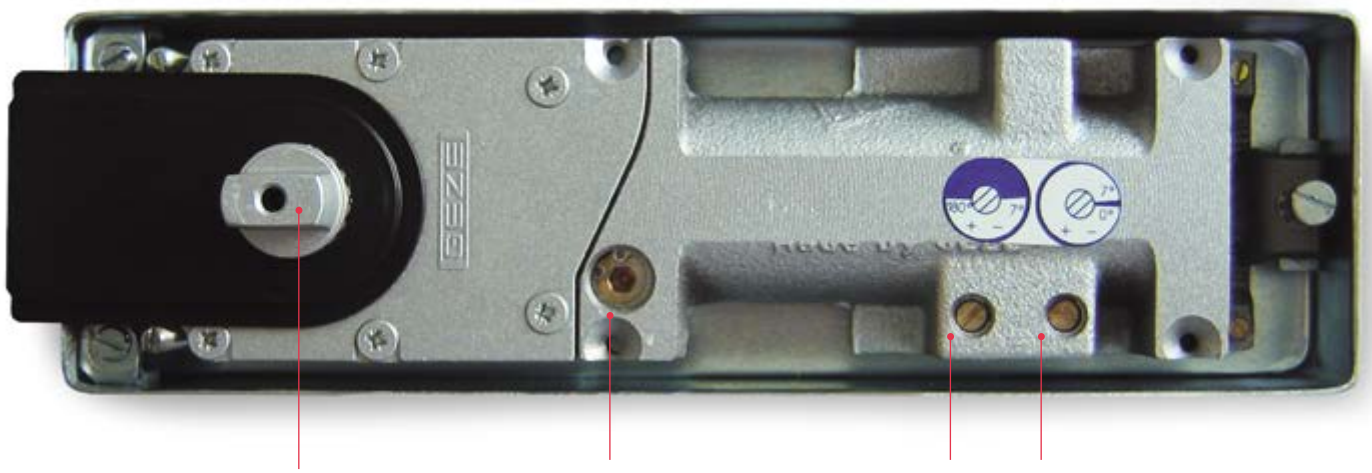

Art.	Force	Capacity L	Capacity P	Hold open	Pivot	Qty
GZ-TS500NV90	Adjustable between **EN1** and **EN4**	**1100** mm	**150** kg	**± 90°**	**German**	1 Pc
GZ-TS500NV110	Adjustable between **EN1** and **EN4**	**1100** mm	**150** kg	**± 110°**	**German**	1 Pc

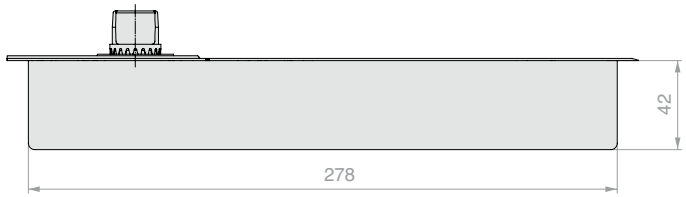

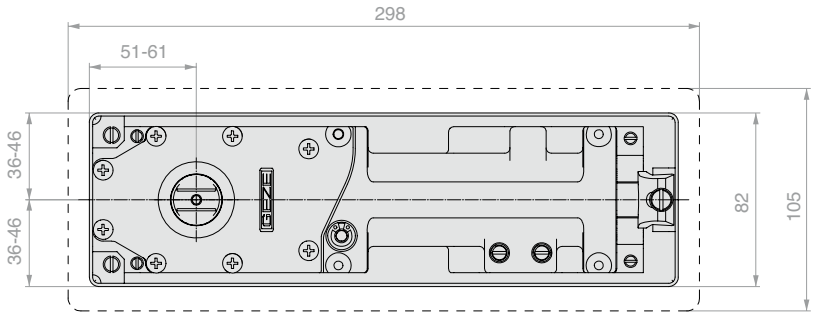

Dimensions of galvanised case for cementing into the ground:
Length: 278 mm
Width: 82 mm
Height: 42 mm

Adjustment of door closer inside the case:
Lengthways: 10 mm
Widthways: 10 mm
Height: 6 mm

Plate dimensions
Length: 298 mm
Width: 105 mm

ADAPTOR

Material: galvanised plate
Plate used as adaptor for GEZE door closer on other brands' cases embedded in the wall.
Perfect for replacement works.

Art.	Q.ty
GZ-TSADT	1 Pc

TS 550 NV

Floor-mounted door closer for hinged and swing doors

The TS 550 NV offers convenience and elegance for swing or hinged doors with door panel weights of up to 300 kg. Its versatility and robustness are particularly well suited to frequently used doors in entrances, such as in offices or lobbies and exhibition centres. With two valves, the opening speed and final stroke can be easily adjusted to ensure the door closes safely. The use of thermostabilised valves helps to avoid switching between summer and winter. **The TS 550 NV model has been tested for 1,000,000 opening and closing cycles**. The TS 550 NV is the door closer for the most demanding use cases. With a strong chrome-silicon steel spring, it does not lose any strength even after being used for ten years. Tempered pistons for high tensile strength and wear resistance featuring an innovative seal technology. Robust grey cast iron housing, high corrosion resistance. Safety valve which prevents intentional damage to the lock or the door by means of excessive pressure, comes with brushed stainless steel finishing plate.

Properties:

- Force adjustable from EN3 to EN6 according to EN1154
- Adjustable closing speed and final stroke
- Variable hold open between ± 80° and ± 165°, can be activated/deactivated
- Adjustable closing delay time
- Safety valve to prevent overloads
- Closing action from around 170°
- Adjustment tolerance: height 6 mm, width 10 mm, length 9 mm
- Galvanised sheet metal cement case
- Thermostabilised valve avoids switching between summer and winter

- **German pivot** (Italian pivot available on request).

ADJUSTMENT
CLOSING FORCE

3 VALVES FOR SETTING:
• CLOSING SPEED
• FINAL STROKE
• HOLD OPEN/CLOSING DELAY TIME

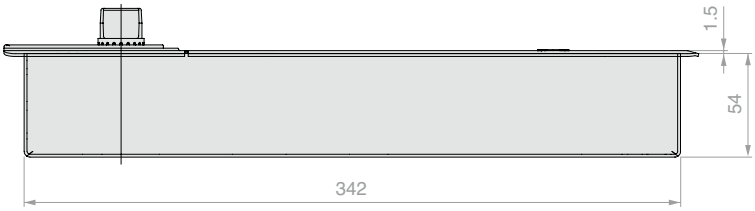

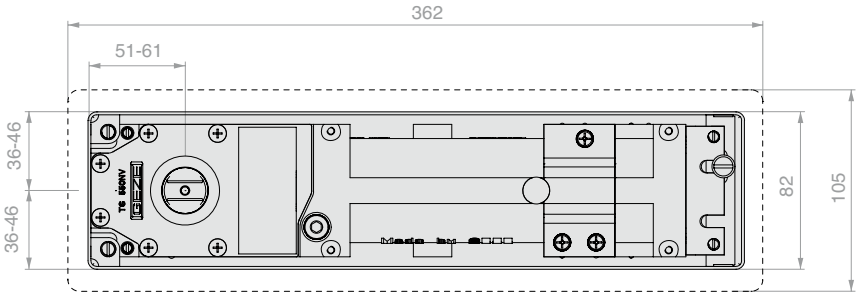

Dimensions of case for cementing into the ground:
Length: 342 mm
Width: 82 mm
Height: 54 mm

Adjustment of door closer inside the case:
Lengthways: 9 mm
Widthways: 10 mm
Height: 6 mm

Plate dimensions
Length: 362 mm
Width: 105 mm

Art.	Force	Capacity L	Capacity P	Hold open - can be activated/deactivated	Pivot	Qty
GZ-TS550NV	Adjustable between **EN3** and **EN6**	**1400** mm	**300** kg	Adjustable between **80°** and **165°**	**German**	1 Pc

TS 3000 V

Overhead door closer

Combining security requirements with a need for devices that only require a minimal force from users to operate them and a corresponding lower closing force. These requirements are fulfilled by the TS 3000 V overhead door closer. The doors can be opened and closed with minimal force. Standard colour: galvanised aluminium. On request, any colour in the RAL chart is possible

Properties:

- Adjustable force between EN1 and EN4 according to EN1154
- Reduced opening force
- Adjustable closing force
- Adjustable closing speed
- Thermostabilised valves avoid switching between summer and winter

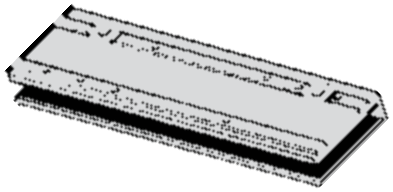

Clamp for glass doors

Clamp for attaching the door closer to the glass does not require any glass machining.

- Dimensions 226 x 67 x 20 mm
- For glass thickness from 8 to 10 mm

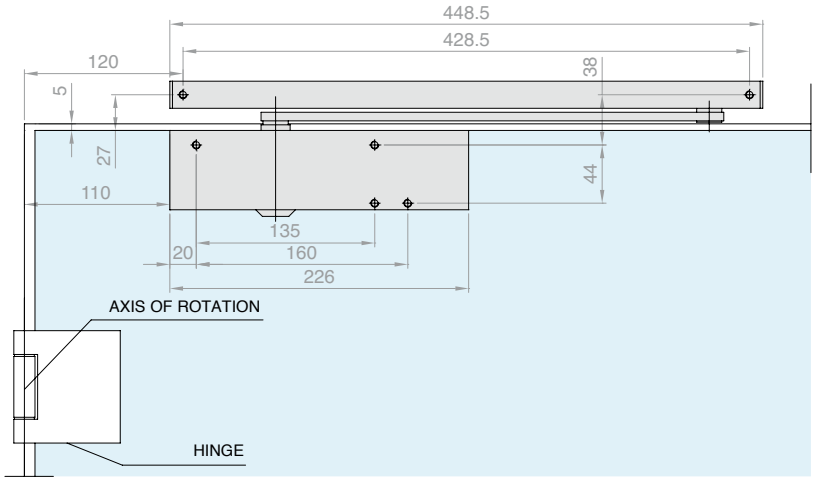

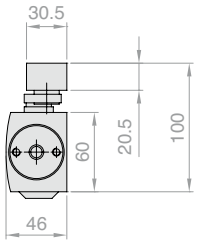

Art.	Force	Capacity L	Qty
GZ-TS3000V	Adjustable between **EN1** and **EN4**	**1100** mm	1 Pc

OPTIONAL - Mechanical hold open

Fitting the hold open unit in the corresponding guideway allows the hold open to be adjusted continuously between 80° and 130°.
The hold force of the hold open can also be adjusted. This also allows the hold open to be disabled.

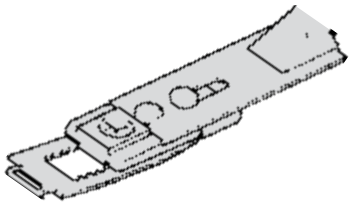

Art.	Q.ty
GZ-TS071924	1 Pc

SEVAX JANUS+

Floor-mounted door closer for hinged and swing doors

Door closer with the zamak body, a stainless steel material suitable for applications in environments with high humidity levels (e.g. bathrooms, outdoor areas). Products wholly made in France by SEVAX - SAINT-GOBAIN. The small size of the body (255 x 68 x H48) means it can be installed in the main door closer cases available on the market. Useful for operating single or double door panels.

The maximum weight is 150 kg for doors up to 1250 mm wide. Comes with stainless steel plate.

The JANUS+ model has been tested for 500,000 opening and closing cycles, in accordance with European standard EN1154

Properties:

- Height 55 mm
- Closing force between EN3 and EN5 (according to **EN1154**), closing force EN3 PMR allows for use in areas available to people of reduced mobility, the reduced torque makes it easier to open the door
- Opening/closing movement -180°/+180°
- 3 speed settings: 180°-70°, 70°-15°, 15°-0°
- Adjustment of positioning for alignment of the axis in 3 planes: x = ± 3 mm, y = ± 5 mm, z = ± 4 mm
- Adjustment of zero point ± 3°
- Galvanised cement case
- 2 types of use according to the hold open position: ± 90°, ± 105°
- German,**French**, **or** Italian **pivot**

Finish: /8 /15

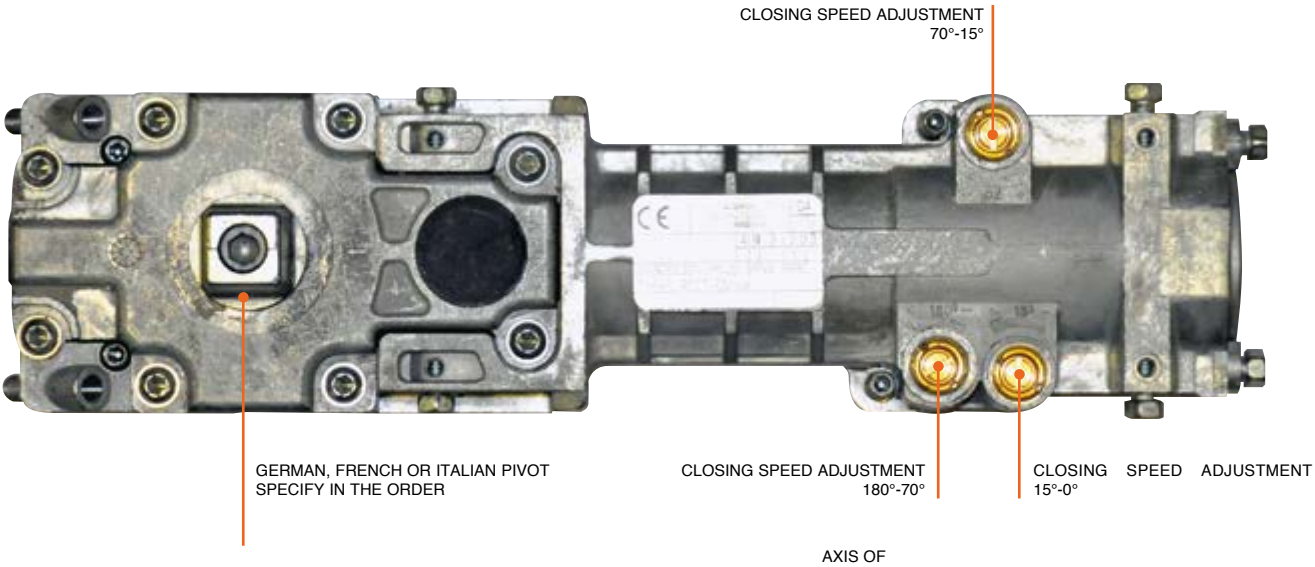

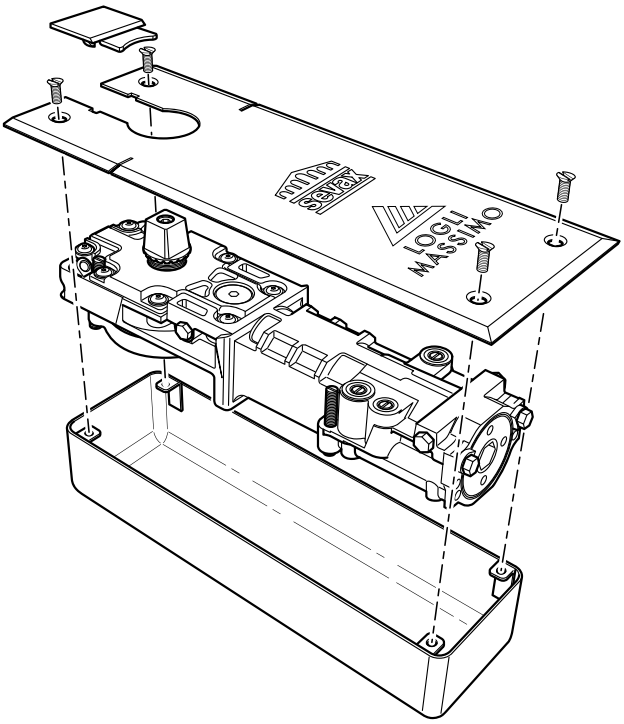

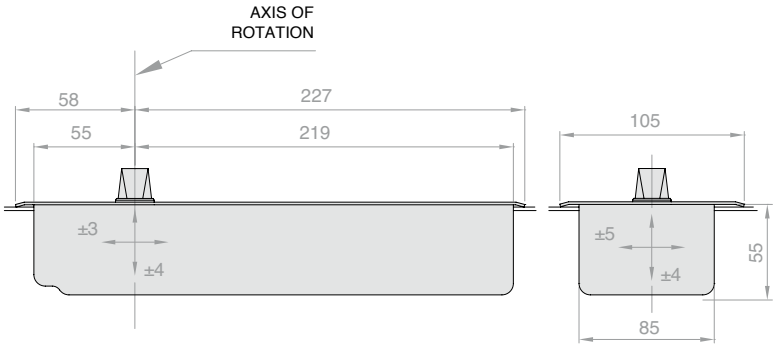

Dimensions of galvanised case for cementing into the ground:
Length: 273 mm
Width: 85 mm
Height: 55 mm
Adjustment of door closer inside the case:
Lengthways: ± 3 mm
Widthways: ± 5 mm
Height: ± 4 mm
Plate dimensions:
Length: 285 mm
Width: 105 mm

	Height	Length	Width
Device	48 mm	255 mm	68 mm
Case	55 mm	273 mm	85 mm
Adjustment space	8 mm	6 mm	10 mm

Art.	Force	Capacity L	Capacity P	Hold open	Pivot	Qty
SX-JS903PMRFR	**EN3PMR**	**950** mm	**150** kg	**± 90°**	**French**	1 Pc
SX-JS903PMRDE	**EN3PMR**	**950** mm	**150** kg	**± 90°**	**German**	1 Pc
SX-JS903PMRIT	**EN3PMR**	**950** mm	**150** kg	**± 90°**	**Italian**	1 Pc
SX-JS903FR	**EN3**	**950** mm	**150** kg	**± 90°**	**French**	1 Pc
SX-JS903DE	**EN3**	**950** mm	**150** kg	**± 90°**	**German**	1 Pc
SX-JS903IT	**EN3**	**950** mm	**150** kg	**± 90°**	**Italian**	1 Pc
SX-JS904FR	**EN4**	**1100** mm	**150** kg	**± 90°**	**French**	1 Pc
SX-JS904DE	**EN4**	**1100** mm	**150** kg	**± 90°**	**German**	1 Pc
SX-JS904IT	**EN4**	**1100** mm	**150** kg	**± 90°**	**Italian**	1 Pc
SX-JS905FR	**EN5**	**1250** mm	**150** kg	**± 90°**	**French**	1 Pc
SX-JS905DE	**EN5**	**1250** mm	**150** kg	**± 90°**	**German**	1 Pc
SX-JS905IT	**EN5**	**1250** mm	**150** kg	**± 90°**	**Italian**	1 Pc
SX-JS1053FR	**EN3**	**950** mm	**150** kg	**± 105°**	**French**	1 Pc
SX-JS1053DE	**EN3**	**950** mm	**150** kg	**± 105°**	**German**	1 Pc
SX-JS1053IT	**EN3**	**950** mm	**150** kg	**± 105°**	**Italian**	1 Pc
SX-JS1054FR	**EN4**	**1100** mm	**150** kg	**± 105°**	**French**	1 Pc
SX-JS1054DE	**EN4**	**1100** mm	**150** kg	**± 105°**	**German**	1 Pc
SX-JS1054IT	**EN4**	**1100** mm	**150** kg	**± 105°**	**Italian**	1 Pc

sevax
SAINT-GOBAIN

SEVAX HYDRAULIC HINGE KIT

Material: Aluminium body, AISI304 stainless steel cover.
Kit including lower hydraulic hinge Art. SX-BT903, upper hinge Art. SX-BTUP1, and ceiling pivot SX-BTUP3.
Lower hinge with automatic return which can be used with door panels weighing up to 100 kg and up to 1000 mm wide with rotation ±150°
The hinge has two speed settings: between 150° - 10° and 10° - 0°.
It is also possible to adjust both the zero point by ±4° and the position of the door by ±2° horizontally and vertically
The BTWIST model has been tested for 500,000 opening and closing cycles, in accordance with European standard END1154:1996
Finish: /8 /15

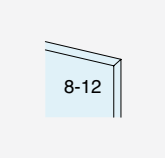

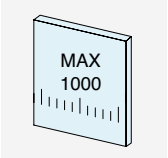

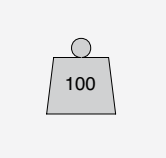

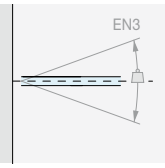

CLOSING FORCE

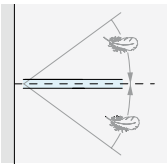

AUTOMATIC RETURN

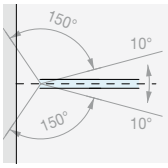

DOUBLE SPEED SETTING
150°-10°, 10° - 0°

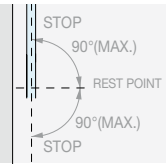

ROTATION ±150°

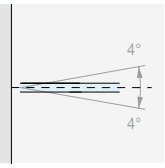

ADJUSTMENT 4°

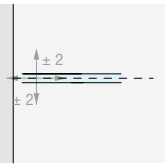

ADJUSTMENT SCREWS

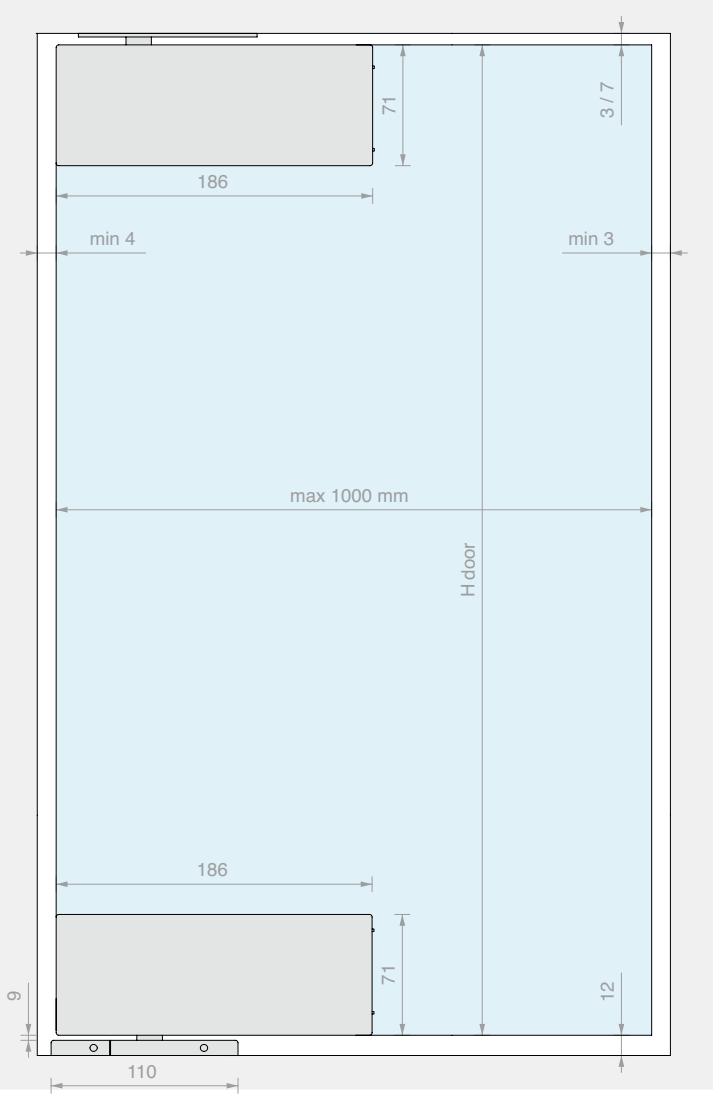

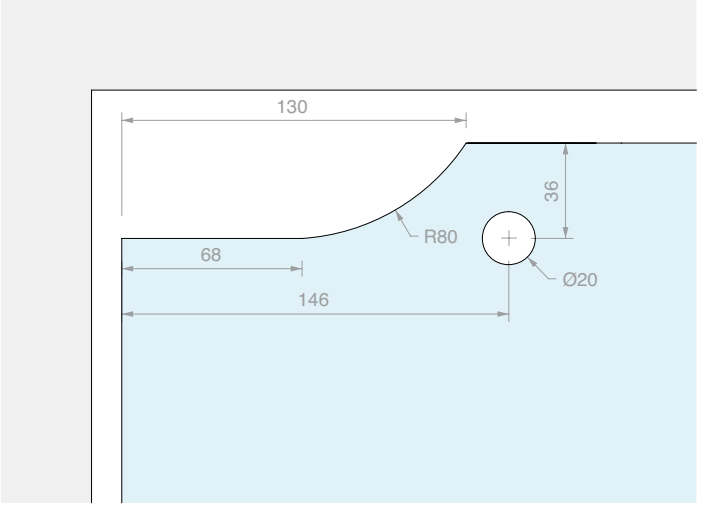

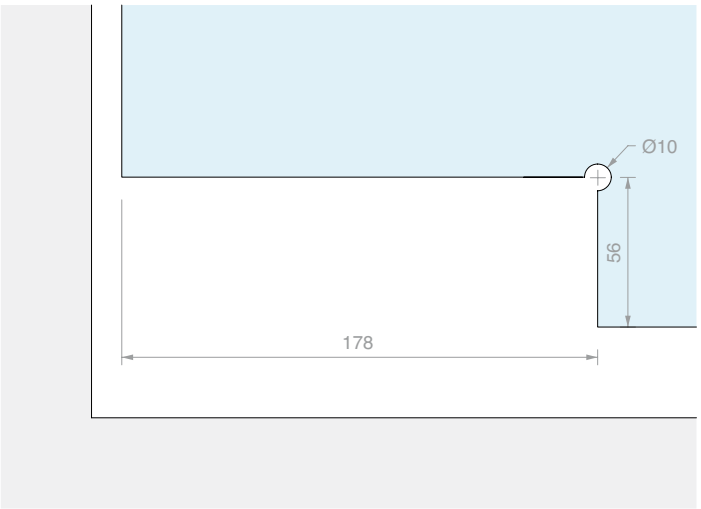

Art.	Closing force	For glass	Qty
SX-BTKIT	EN3 (28 Nm)	From **8** to **12** mm	1 Pc

SEVAX BTWIST LOWER HINGE

Material: Aluminium die cast body,
AISI 304 stainless steel cover.
Lower hinge with automatic return can be used with door panels weighing up to 100 kg and up to 1000 mm wide with rotation ±150°. The hinge has two speed settings: between 150° - 10° and 10° - 0°. It is also possible to adjust both the zero point by ±4° and the position of the door by ±2° horizontally and vertically. The BTWIST model has been tested for 500,000 opening and closing cycles, in accordance with European standard END1154:1996

Finish: /8 /15

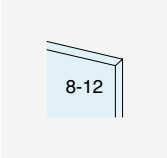

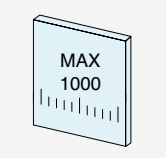

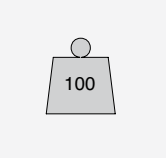

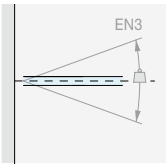

CLOSING FORCE

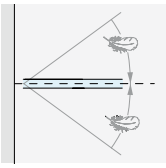

AUTOMATIC RETURN

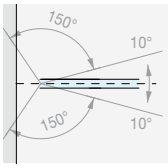

DOUBLE SPEED SETTING

150°-10°, 10° - 0°

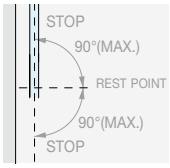

ROTATION ±150°

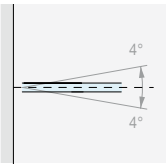

ADJUSTMENT 4°

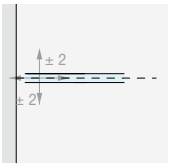

ADJUSTMENT SCREWS

The BTWIST model has been tested for 500,000 opening and closing cycles, in accordance with European standard END1154:1996

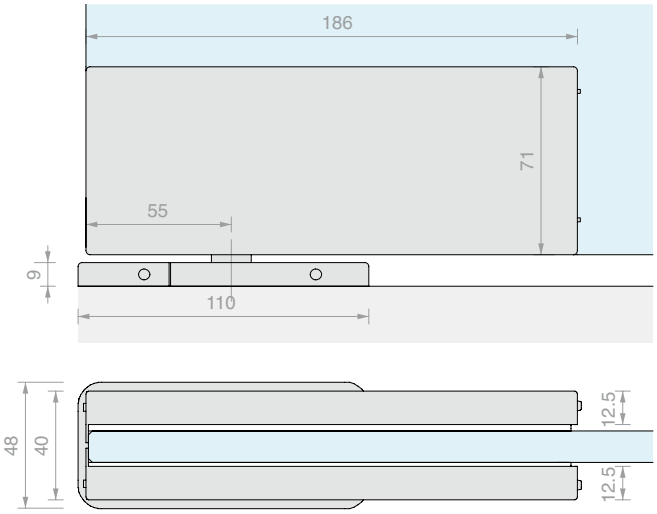

Art.	Closing force	For glass	Qty
SX-BT903	EN3 (28 Nm)	From **8** to **12** mm	1 Pc

PIN FOR UPPER HINGE BTUP1

Material: AISI 304 steel
Finish: /8 /15

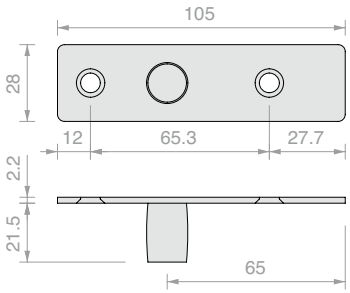

Art.	Qty
SX-BTUP3	1 Pc

SEVAX BTWIST UPPER HINGE

Material: Aluminium die cast body,
AISI 304 stainless steel cover.
Finish: /8 /15

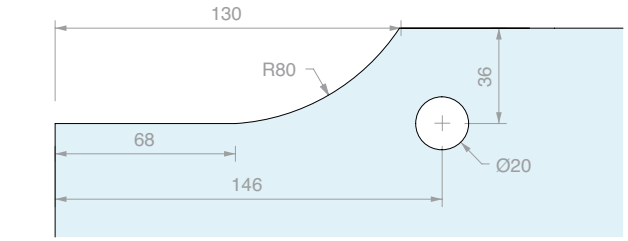

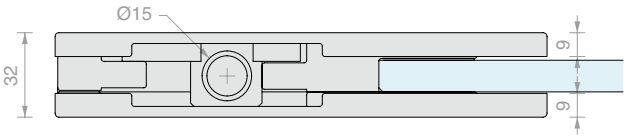

Art.	For glass	Qty
SX-BTUP1	From **8** to **12** mm	1 Pc

SEVAX TRANSOM HINGE WALL FIXING

Material: Aluminium die cast body,
AISI 304 stainless steel cover.
Finish: /8 /15

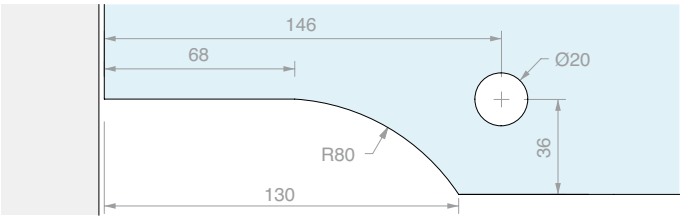

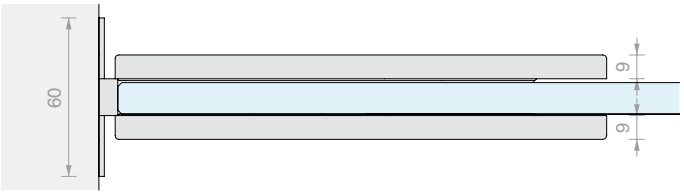

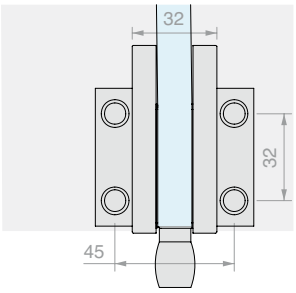

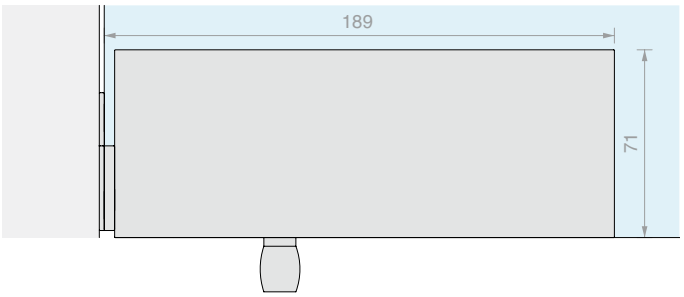

Art.	For glass	Qty
SX-BTUP5	From **8** to **12** mm	1 Pc

SOLEIL ROYAL SERIES WALL/GLASS HINGE

Material: AISI 304 stainless steel

Rotation - 90

Recommended hole size Ø20 mm

Finish: /9

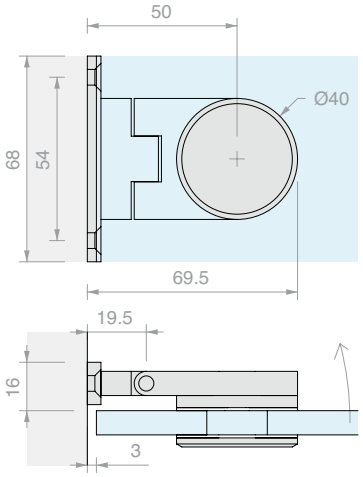

Art.	For glass	Qty
SPH2	From **8** to **10** mm	1 Pc

SOLEIL ROYAL SERIES WALL/GLASS CONNECTOR

Material: AISI 304 stainless steel

Recommended hole size Ø20 mm

Finish: /9

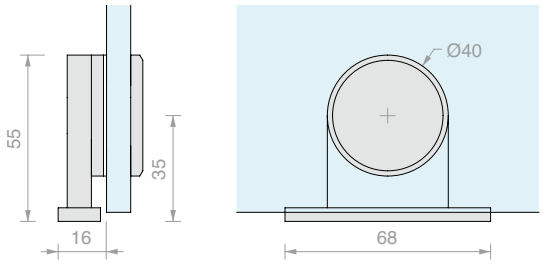

Art.	For glass	Qty
SPC501	From **8** to **10** mm	1 Pc

SOLEIL ROYAL SERIES 90° 2-WAY CONNECTOR

Material: AISI 304 stainless steel

Recommended hole size Ø20 mm

Finish: /9

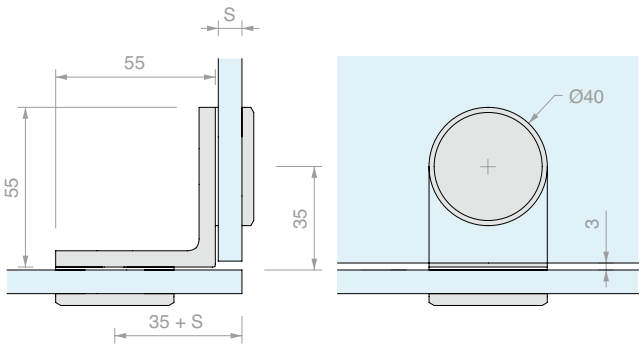

Art.	For glass thickness (S)	Qty
SPC507	From **8** to **10** mm	1 Pc

SOLEIL ROYAL SERIES STRAIGHT 2-WAY CONNECTOR

Material: AISI 304 stainless steel

Recommended hole size Ø20 mm

Finish: /9

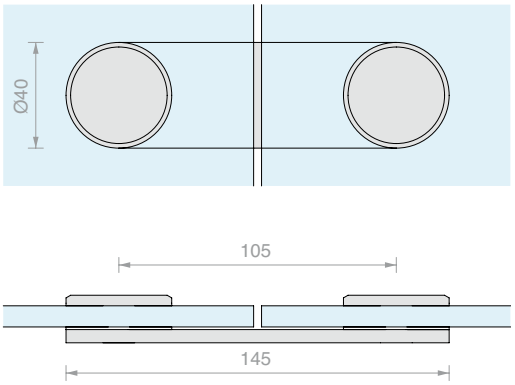

Art.	For glass	Qty
SPC509	From **8** to **10** mm	1 Pc

SOLEIL ROYAL L-SHAPED CONNECTOR

Material: AISI 304 stainless steel

Recommended hole size Ø20 mm

Finish: /9

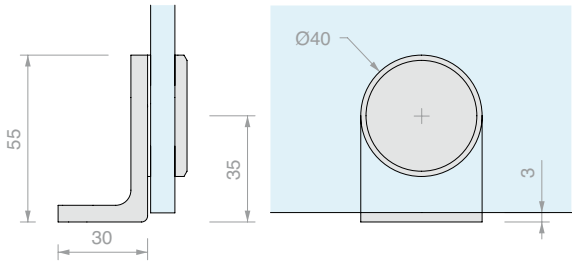

Art.	For glass	Qty
SPC503	From **8** to **10** mm	1 Pc

PAIR OF SOLEIL ROYAL SERIES DOOR KNOBS

Material: AISI 304 stainless steel

Recommended hole size Ø12 mm

Finish: /9

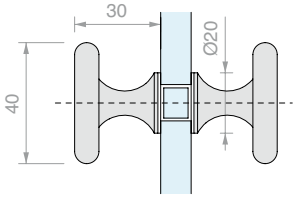

Art.	For glass	Qty
POM8	From **8** to **10** mm	1 Pc

SOLEIL ROYAL LOCK

Material: AISI 304 stainless steel
Supplied with European cylinder and 3 keys
Pivot Ø10 x L 18 mm.
Finish: /8 /15

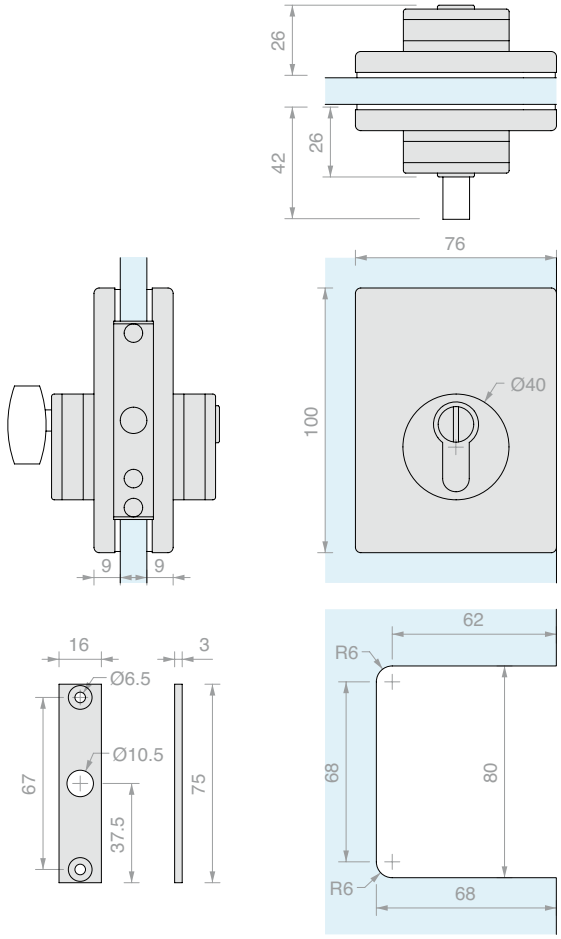

Art.	For glass	Lock	Key	Qty
SEROYS	From **8** to **12** mm	Lock + lock	Single	1 Pc
SEROYSD	From **8** to **12** mm	Lock + lock	Different	1 Pc
SEROYP	From **8** to **12** mm	Door knob + lock	Different	1 Pc

STRIKE PLATE FOR SOLEIL ROYAL LOCK

Material: AISI 304 stainless steel
Finish: /8 /15

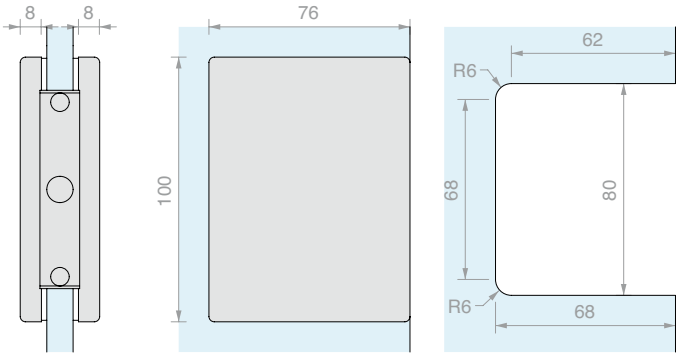

Art.	For glass	Qty
SEROYC	From **8** to **12** mm	1 Pc

LOGLI
MASSIMO

CENTRAL WALL/GLASS HINGE DQMATIQUE WITH SPRING RETURN

Material: Brass, AISI 304 stainless steel

Finish: /1 /24 /45

Type Approved Safety Regular Production Surveillance

TÜVRheinland CERTIFIED

www.tuv.com ID 1111292548

SET OF WALL SPACERS

Material: Steel

1 Pc thickness 0.5 mm

1 Pc thickness 1 mm

1 Pc thickness 2.5 mm

Finish: /8 /15

Art.	Qty
DQMATIQUE3	1 Pc

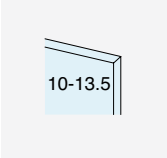

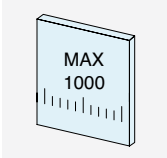

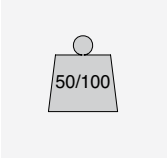

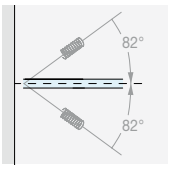

CLOSING RETURN

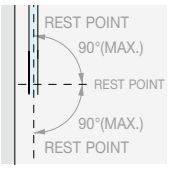

±90° ROTATION

NO EXPOSED SCREWS

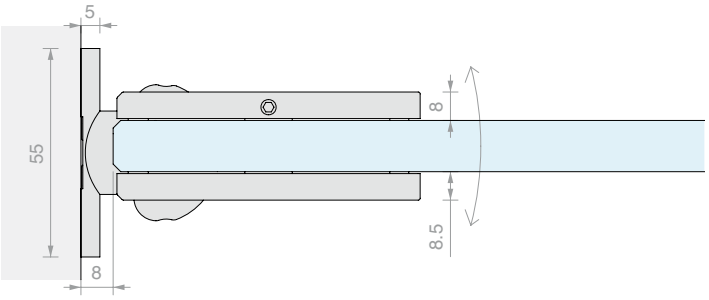

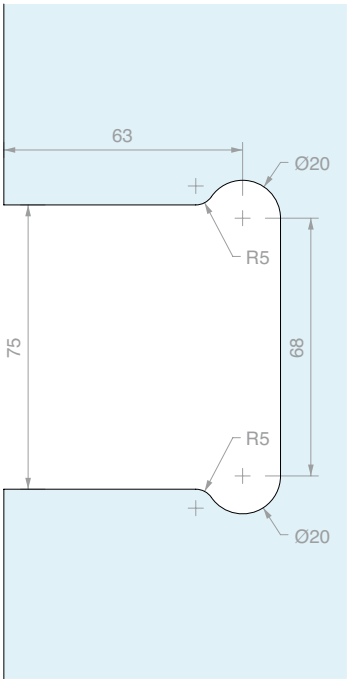

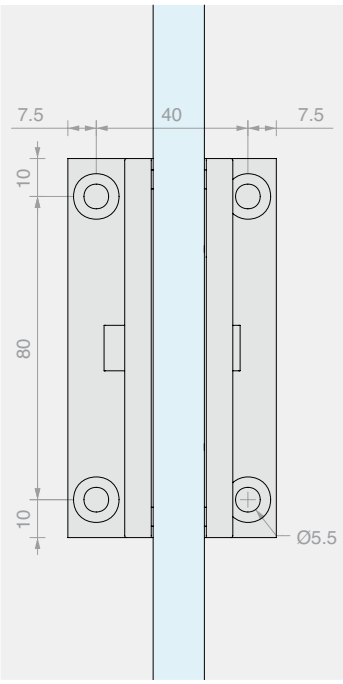

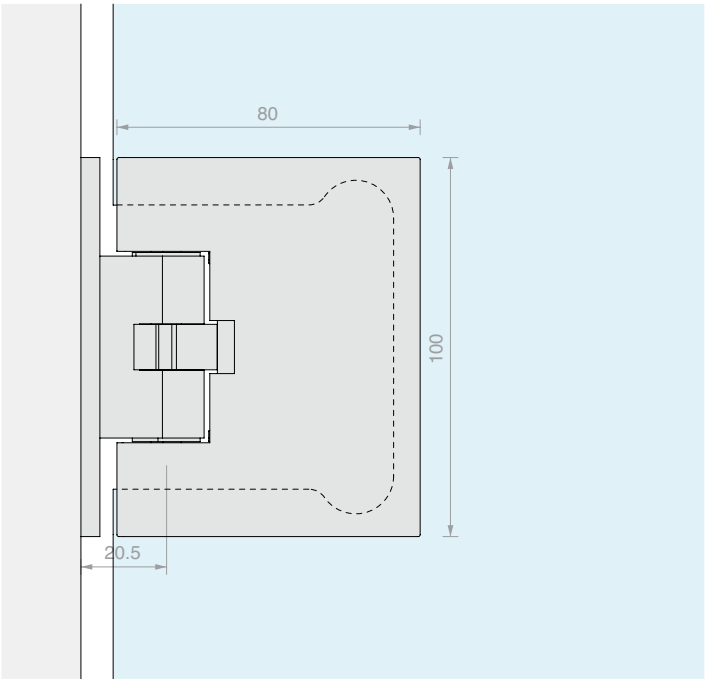

Art.	Load	For glass	Qty
DQMATIQUE44	**50** kg	From **10** to **13.5** mm	1 Pc
DQMATIQUE66	**100** kg	From **10** to **13.5** mm	1 Pc

GLASS/GLASS HINGE
DQMATIQUE WITH SPRING RETURN

Material: Brass, AISI 304 stainless steel

Finish: /1 /24 /45

Type Approved
Safety
Regular Production
Surveillance
www.tuv.com
ID 1111292548

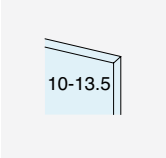

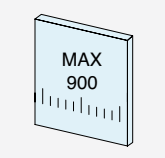

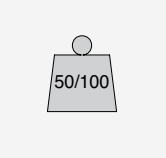

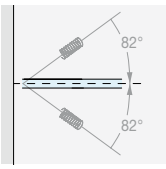

CLOSING RETURN

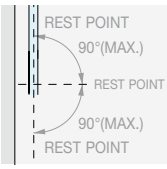

±90° ROTATION

NO EXPOSED SCREWS

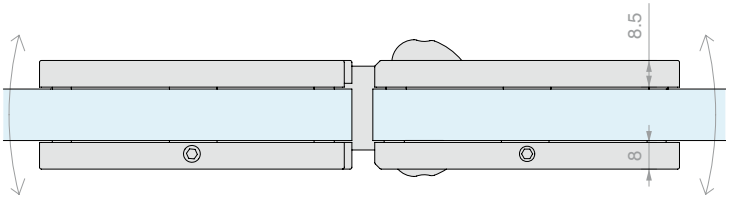

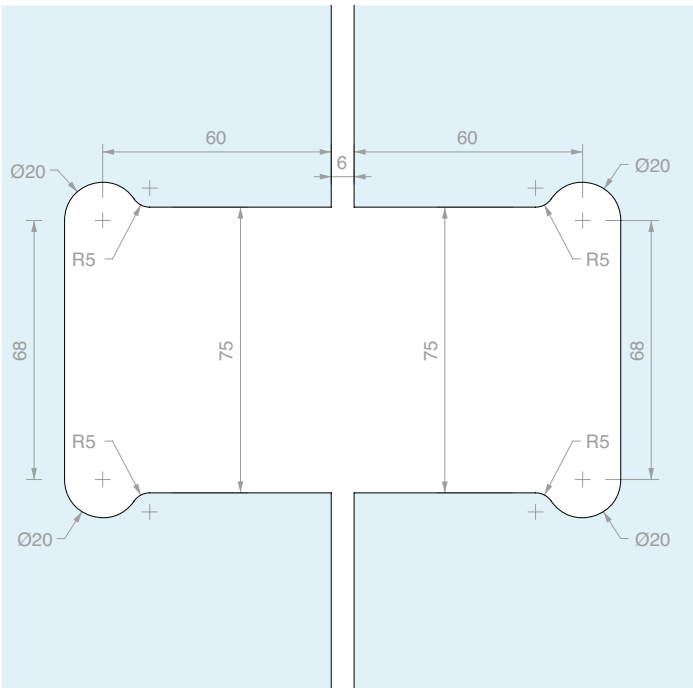

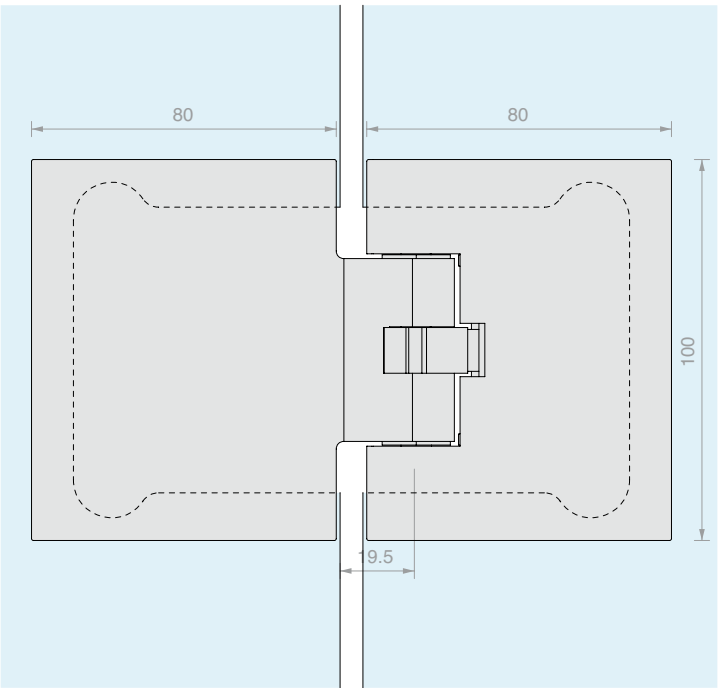

Art.	Load	For glass	Qty
DQMATIQUE480	**50** kg	From **10** to **13.5** mm	1 Pc
DQMATIQUE680	**100** kg	From **10** to **13.5** mm	1 Pc

SER-MY LOCK

Material: Brass

Supplied with European cylinder and 3 keys

Pivot Ø10 x L 18 mm.

Finish: /1 /2 /3

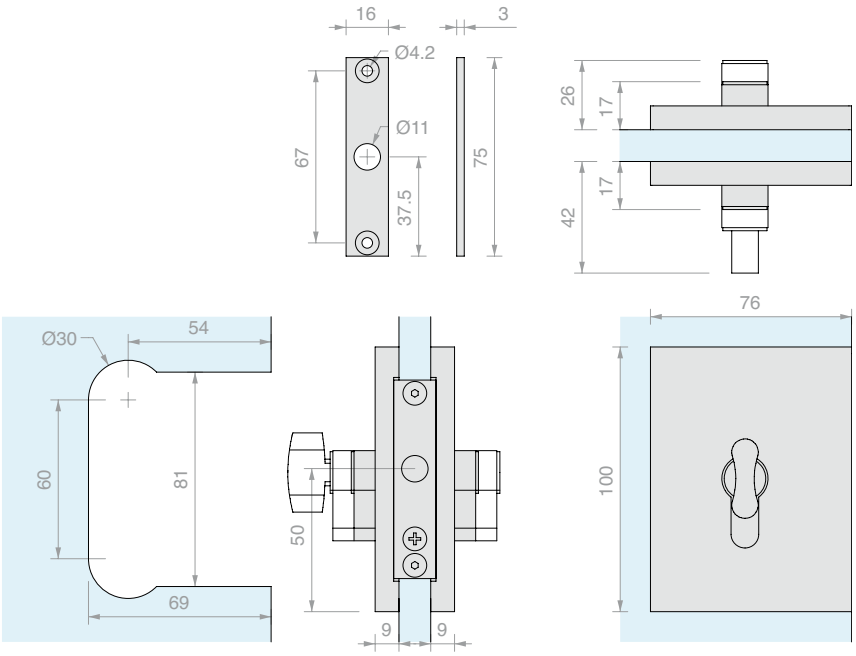

Art.	For glass	Lock	Key	Qty
SERMYS	From **8** to **12** mm	Lock + lock	Different	1 Pc
SERMYSU	From **8** to **12** mm	Lock + lock	Single	1 Pc
SERMYP	From **8** to **12** mm	Door knob + lock	Single	1 Pc

SER-MY LOCK WITH REAR HANDLES

Material: Brass

Supplied with European cylinder and 3 keys

Pivot Ø10 x L 18 mm.

Finish: /1 /24 /45

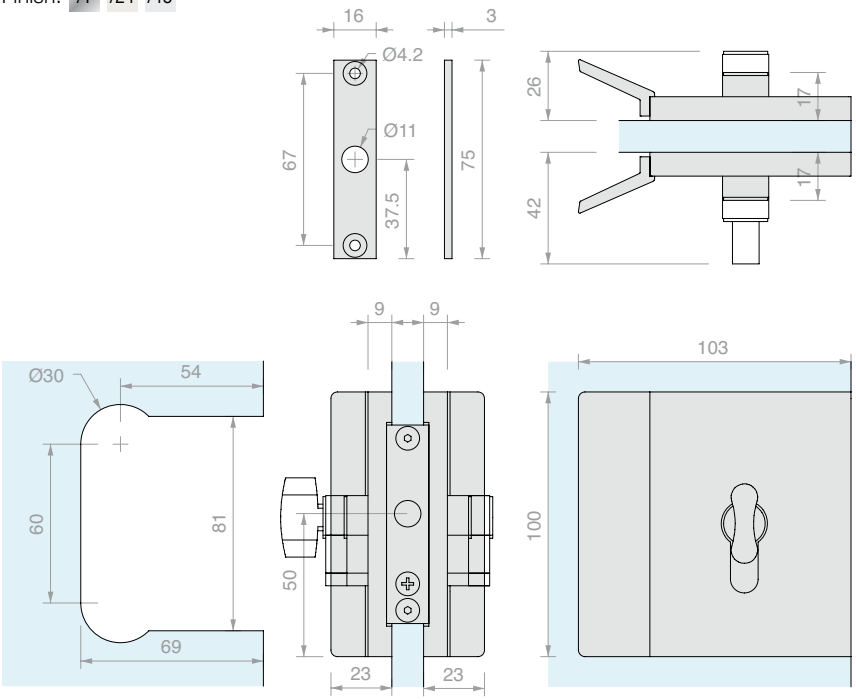

Art.	For glass	Lock	Key	Qty
SERMYMS	From **8** to **12** mm	Lock + lock	Different	1 Pc
SERMYMSU	From **8** to **12** mm	Lock + lock	Single	1 Pc
SERMYMP	From **8** to **12** mm	Door knob + lock	Single	1 Pc

WALL STRIKE PLATE

Material: Steel

Finish: /8 /15

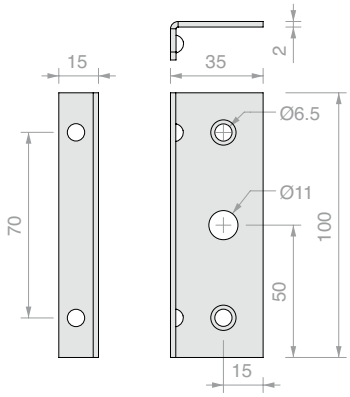

Art.	Q.ty
SERMYL	1 Pc

STRIKE PLATE FOR SER-MY LOCK

Material: Brass

Finish: /1 /2 /3

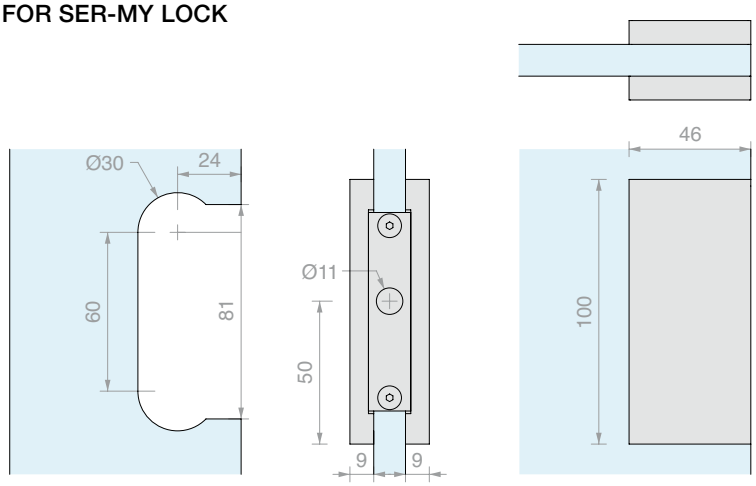

Art.	For glass	Qty
SERMYC1	From **8** to **12** mm	1 Pc

STRIKE PLATE FOR SER-MY LOCK WITH STOP

Material: Brass

Finish: /1 /2 /3

Finish*: /2 /8 /15

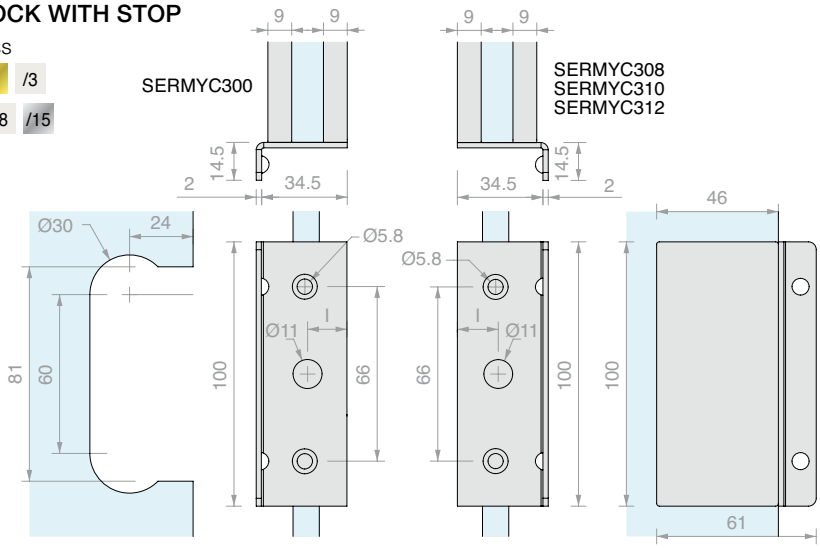

Art.	For glass	l	Description	Qty
SERMYC300	From **8** to **12** mm	**15** mm		1 Pc
SERMYC308	**8** mm	**15.5** mm		1 Pc
SERMYC310	**10** mm	**15** mm		1 Pc
SERMYC312	**12** mm	**14** mm		1 Pc
YC300*	From **8** to **12** mm	**15** mm	Plate only	1 Pc
YC308*	**8** mm	**15.5** mm	Plate only	1 Pc
YC310*	**10** mm	**15** mm	Plate only	1 Pc
YC312*	**12** mm	**14** mm	Plate only	1 Pc

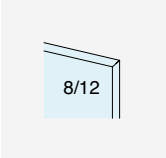

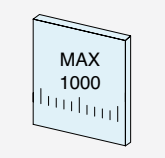

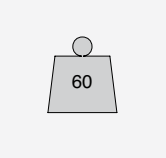

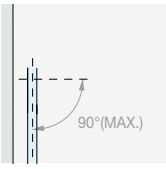

+90° ROTATION

HINGE FOR NARROW JAMBS FR300R

Material: AISI 304 stainless steel

Finish: /8 /15

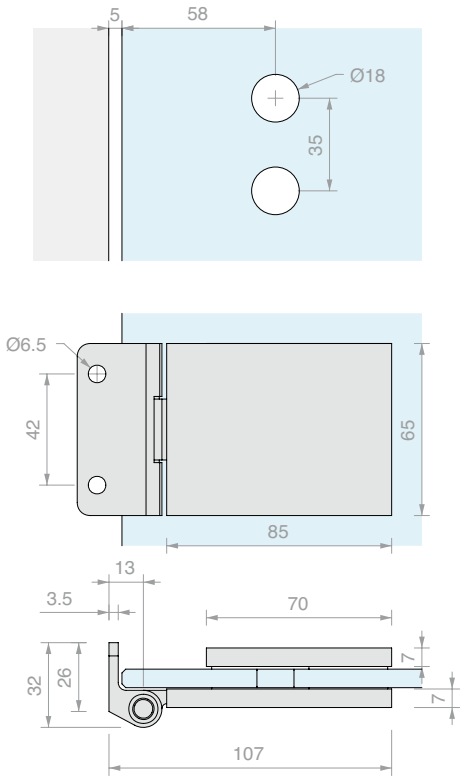

Art.	For glass	Qty
FR300R	From **8** to **12** mm	1 Pc

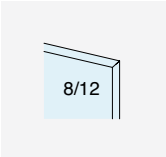

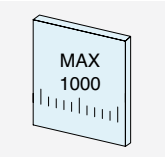

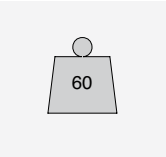

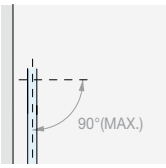

+90° ROTATION

HINGE FOR NARROW JAMBS FH300C

Material: AISI 304 stainless steel

Finish: /8 /15

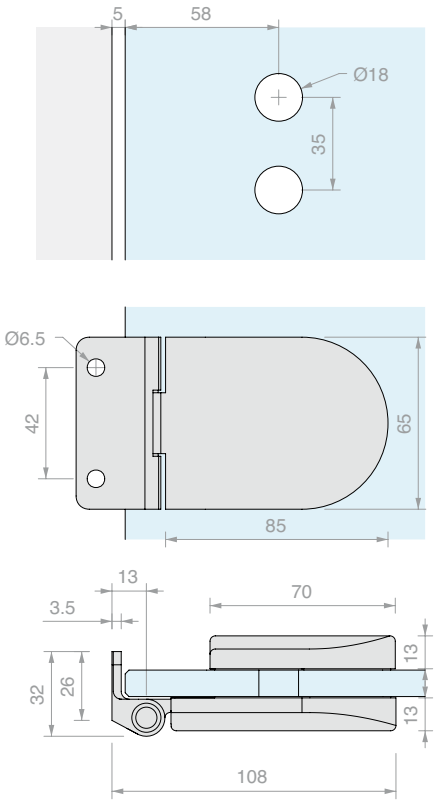

Art.	For glass	Qty
FH300C	From **8** to **12** mm	1 Pc

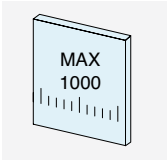

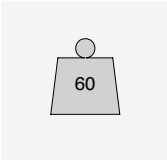

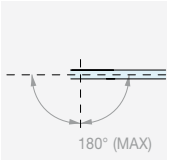

+180° ROTATION

VERTICAL HINGE FOR DOOR JAMBS

Material: Brass

Finish: /1 /3

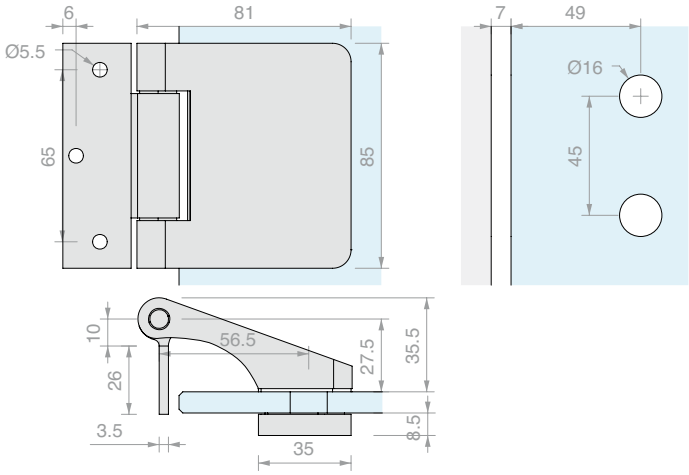

Art.	For glass	Qty
CER148	From **8** to **12** mm	1 Pc

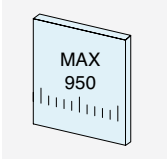

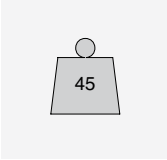

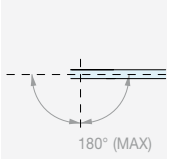

+180° ROTATION

SQUARE HINGE FOR DOOR JAMBS TO BE FITTED TO WALL PIVOT

Material: Brass

With anuba hinge cover

Finish: /1 /3

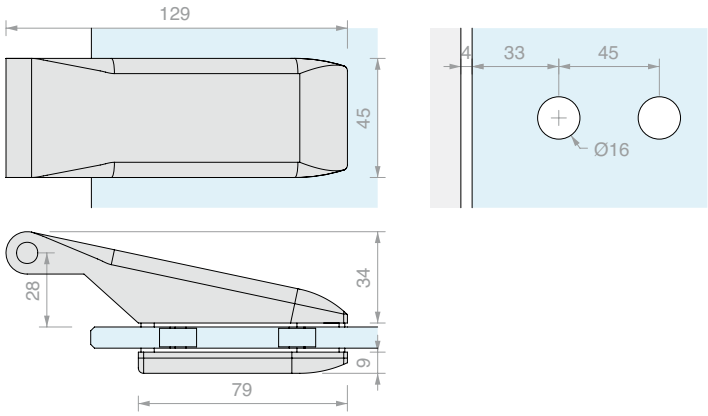

Art.	For glass	Qty
CER160	From **8** to **12** mm	1 Pc

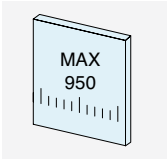

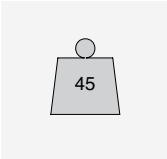

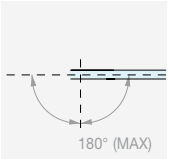

+180° ROTATION

ROUNDED HINGE FOR DOOR JAMBS TO BE FITTED TO PIVOT

Material: Brass

With anuba hinge cover

Finish: /1 /3

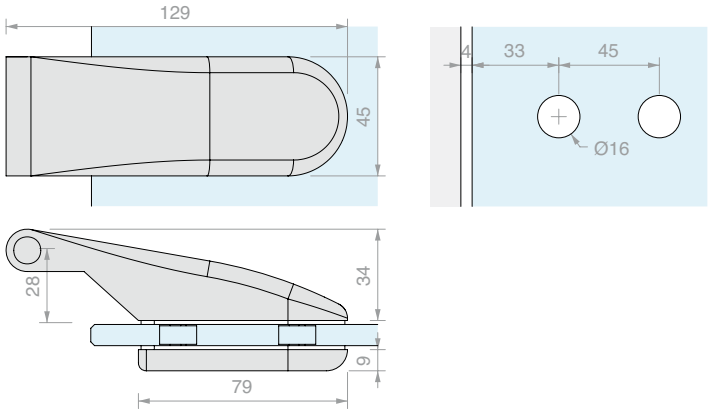

Art.	For glass	Qty
CER175	From **8** to **12** mm	1 Pc

ANUBA WALL/HINGE PIVAN04

Material: Galvanised iron

Finish: /89

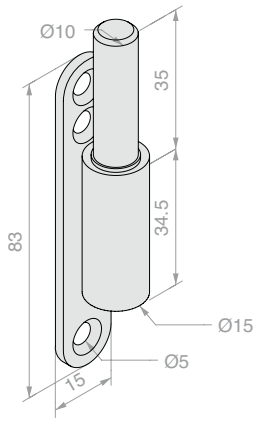

Art.	Q.ty
PIVAN04	1 Pc

ANUBA WALL/HINGE PIVAN01

Material: AISI 304 stainless steel

Finish: /8

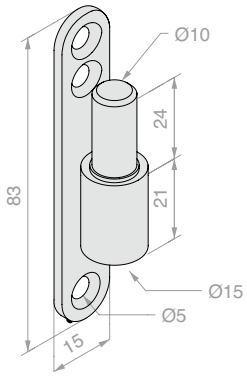

Art.	Q.ty
PIVAN01	1 Pc

ANUBA WOOD/HINGE PIVAN05

Material: Galvanised iron

Finish: /89

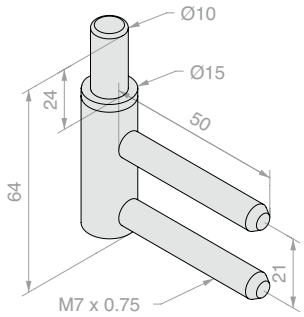

Art.	Q.ty
PIVAN05	1 Pc

ANUBA METAL/HINGE PIVAN08

Material: Galvanised iron

Finish: /89

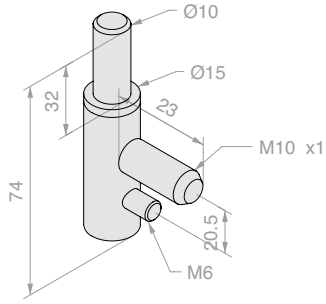

Art.	Q.ty
PIVAN08	1 Pc

WALL/GLASS HINGE FOR SQUARE DOOR JAMBS

Material: Aluminium

Finish: /6 /88 /97

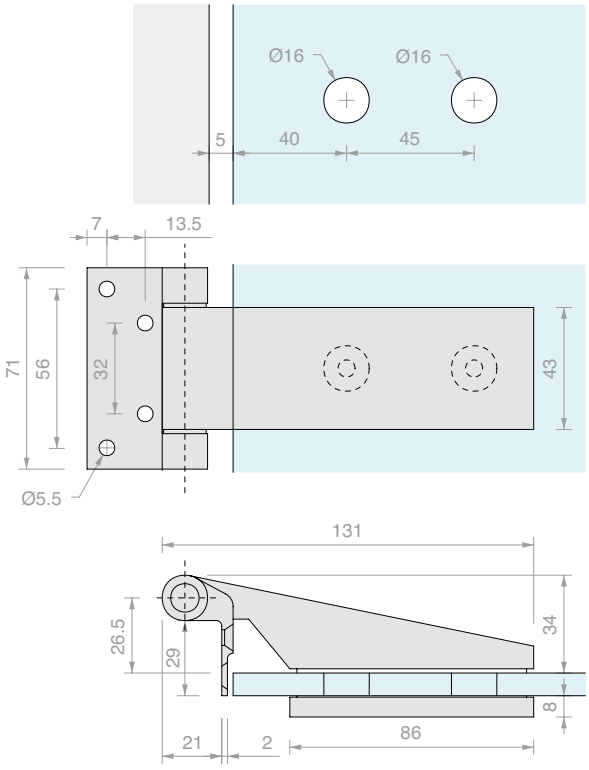

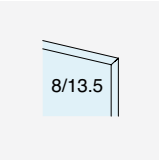

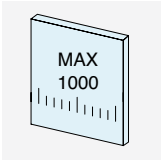

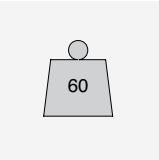

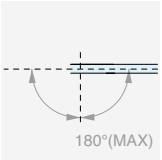

+180° ROTATION

Art.	For glass	Qty
CER4ALSQ	From **8** to **13.5** mm	1 Pc

WALL/GLASS HINGE FOR ROUNDED DOOR JAMBS

Material: Aluminium

Finish: /6 /88 /97

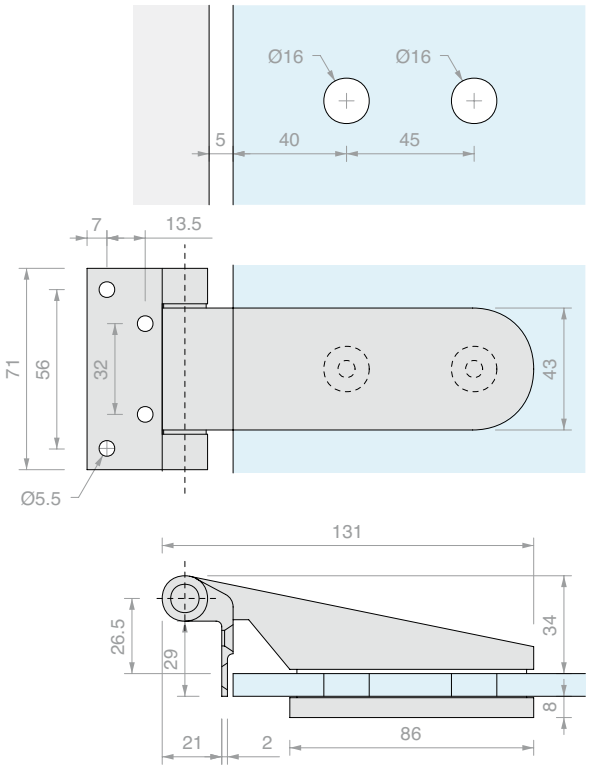

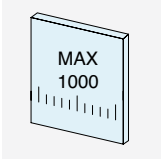

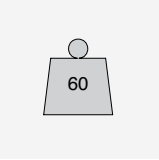

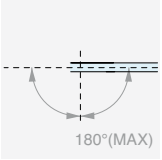

+180° ROTATION

Art.	For glass	Qty
CER4AL	From **8** to **13.5** mm	1 Pc

WALL/GLASS HINGE FOR SQUARE DOOR JAMBS

Material: Aluminium

Finish: /6 /88 /97

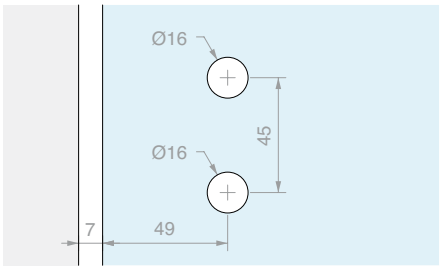

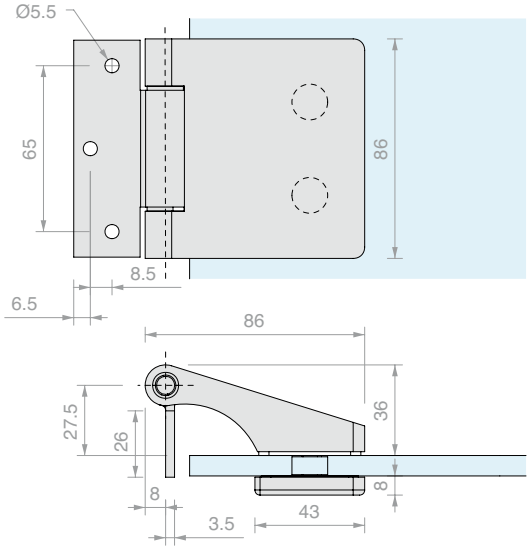

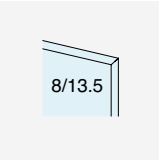

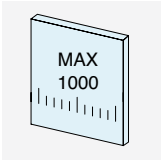

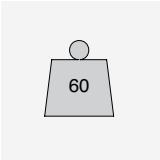

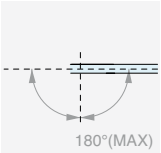

+180° ROTATION

Art.	For glass	Qty
CER148ALSQ	From **8** to **13.5** mm	1 Pc

WALL/GLASS HINGE FOR ROUNDED DOOR JAMBS

Material: Aluminium

Finish: /6 /88 /97

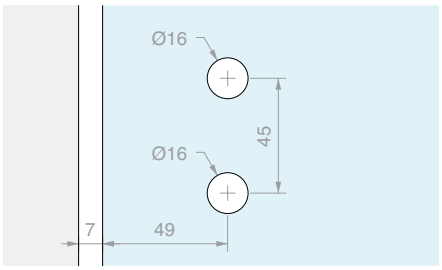

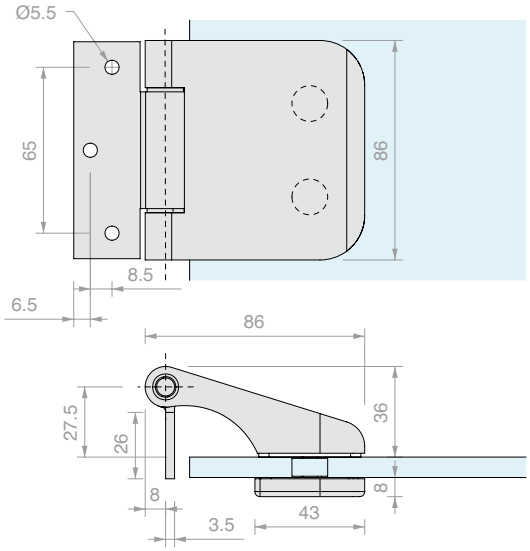

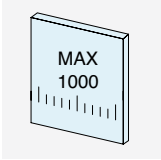

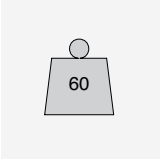

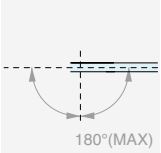

+180° ROTATION

Art.	For glass	Qty
CER148AL	From **8** to **13.5** mm	1 Pc

WALL/GLASS HINGE
FOR NARROW SQUARE DOOR JAMBS

Material: Aluminium

Finish: /97 /R2

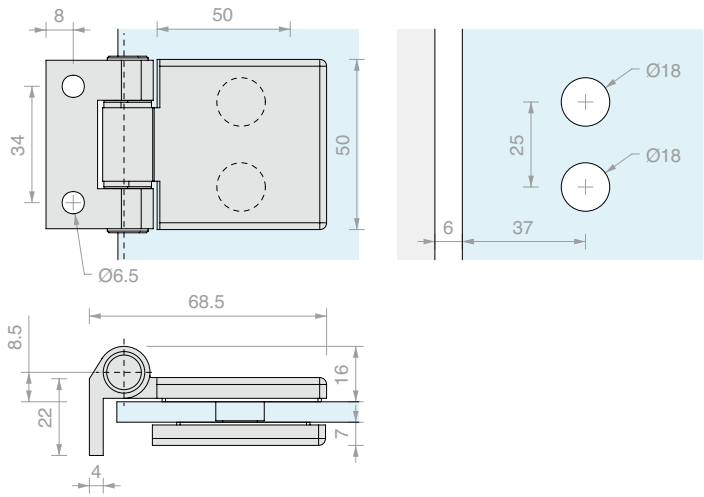

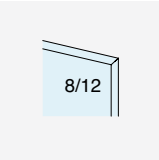

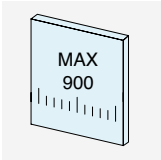

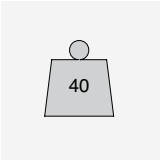

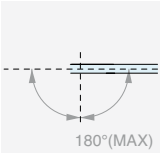

+180° ROTATION

Art.	For glass	Qty
FA50	From **8** to **12** mm	1 Pc

WALL/GLASS HINGE
FOR NARROW RECTANGULAR DOOR JAMBS

Material: Aluminium

Finish: /97 /R2

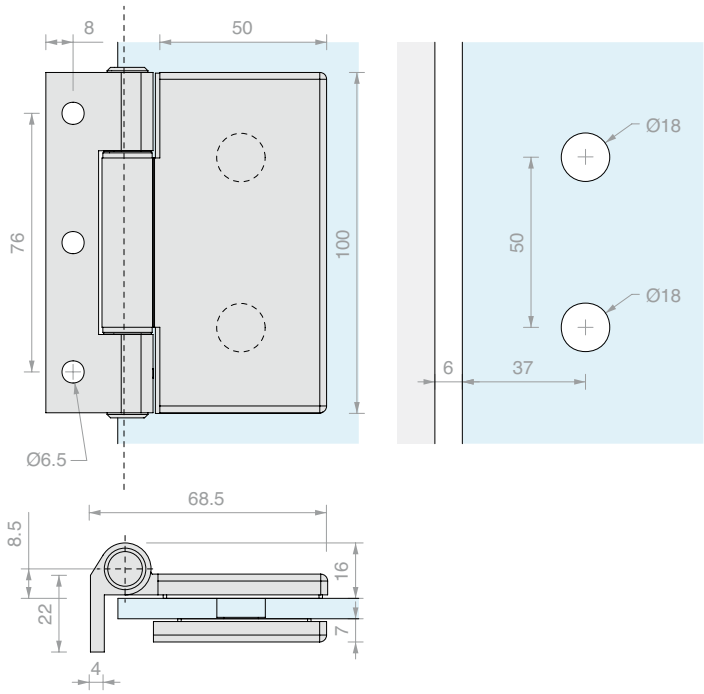

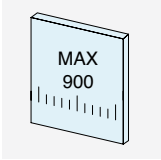

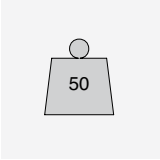

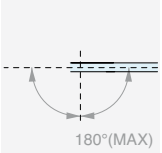

+180° ROTATION

Art.	For glass	Qty
FA100	From **8** to **12** mm	1 Pc

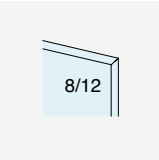

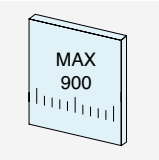

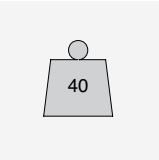

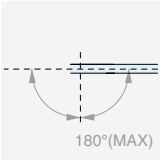

+180° ROTATION

GLASS/GLASS HINGE FA580

Material: Aluminium

Finish: /97 /R2

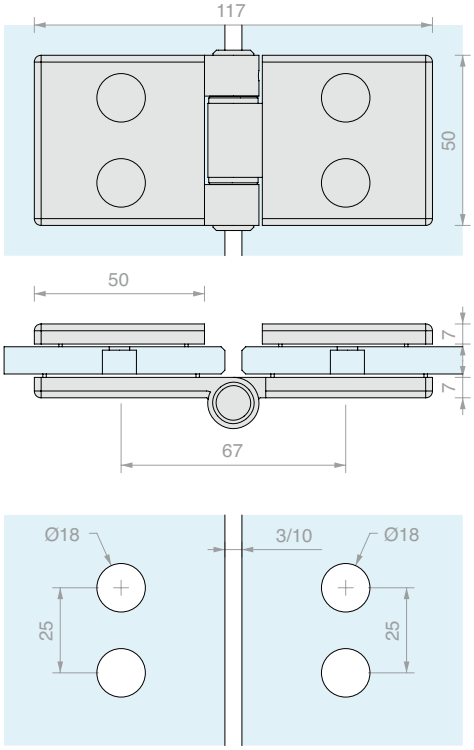

Art.	For glass	Qty
FA580	From **8** to **12** mm	1 Pc

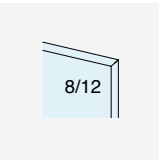

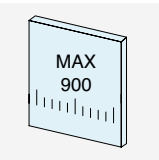

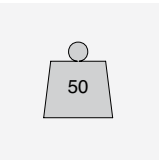

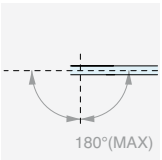

+180° ROTATION

GLASS/GLASS HINGE FA180

Material: Aluminium

Finish: /97 /R2

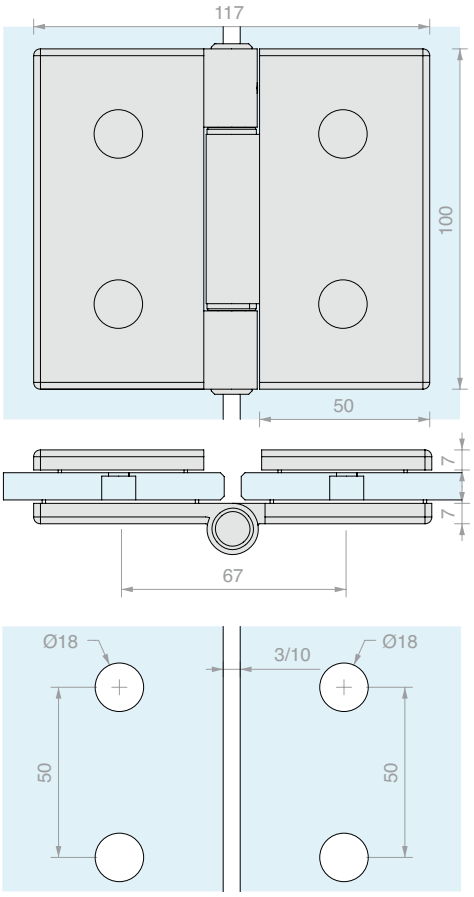

Art.	For glass	Qty
FA180	From **8** to **12** mm	1 Pc

GLASS HINGES

Material: Aluminium

Finish: /97

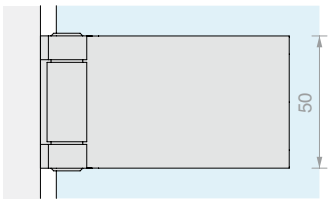

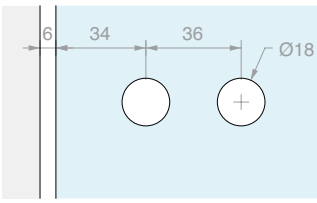

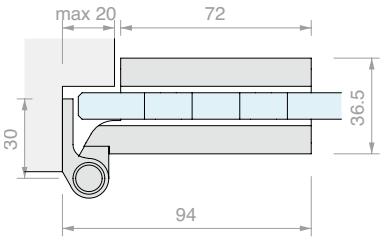

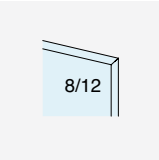

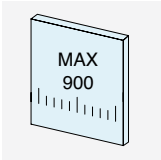

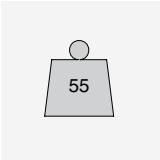

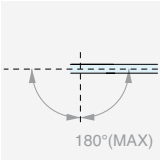

+180° ROTATION

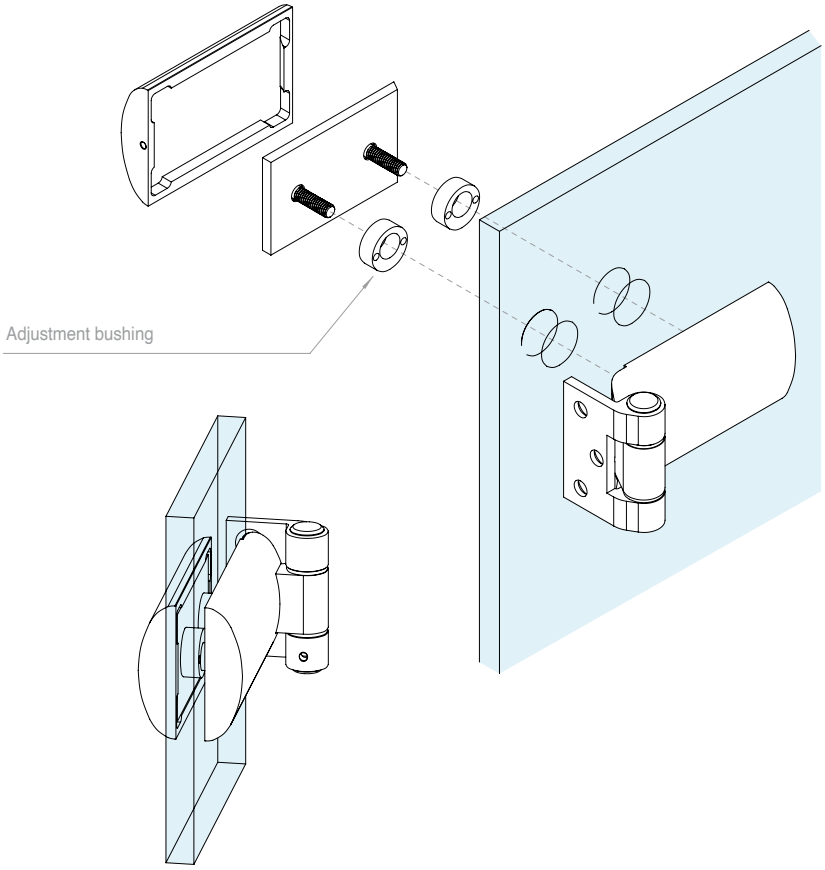

Art.	For glass	Qty
CERMGLISS	From **8** to **12** mm	1 Pc

SR1220 LOCK BODY WITH HOLE FOR EUROPEAN CYLINDER

Material: AISI 304 stainless steel

Finish: /8 /15

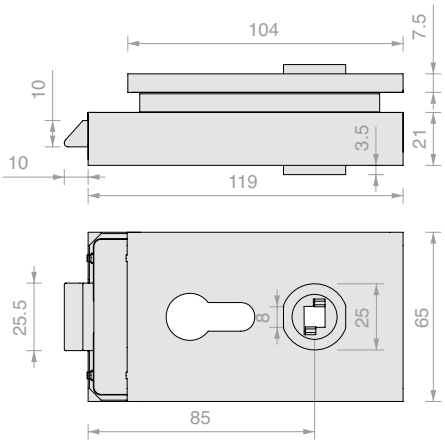

Art.	For glass	Latch	Qty
SR1220CORP	From **8** to **12** mm	Mechanical	1 Pc

SR1220 LOCK BODY WITH DOOR KNOB, FREE/OCCUPIED

Material: AISI 304 stainless steel

Finish: /8 /15

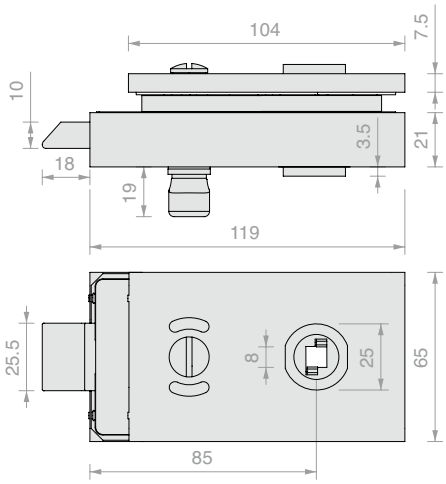

Art.	For glass	Latch	Qty
SR119CORP	From **8** to **12** mm	Mechanical	1 Pc

LOCK NOTCH SR1220

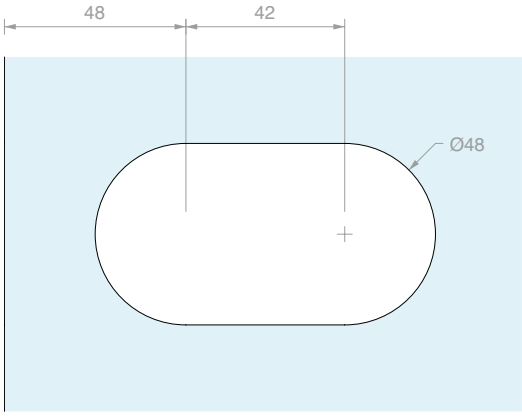

SRS1180 LOCK BODY WITH HOLE FOR EUROPEAN CYLINDER

Material: AISI 304 stainless steel

Finish: /8 /15

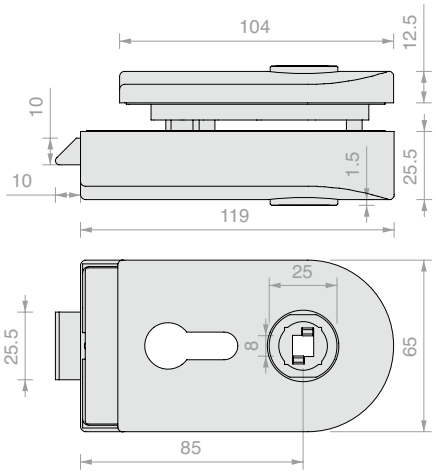

Art.	For glass	Latch	Qty
SRS1180CORP	From **8** to **12** mm	Mechanical	1 Pc

SR118 LOCK BODY WITH DOOR KNOB AND FREE/OCCUPIED

Material: AISI 304 stainless steel

Finish: /8 /15

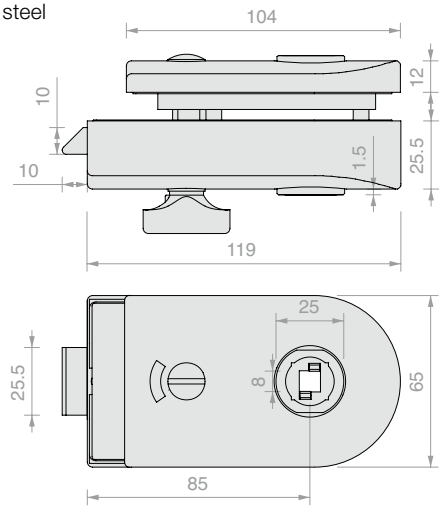

Art.	For glass	Latch	Qty
SR118CORP	From **8** to **12** mm	Mechanical	1 Pc

LOCK NOTCH SRS1180 / SR118

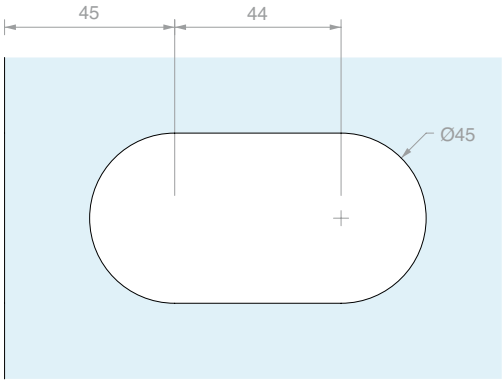

COUNTERLOCK SERIES SR1220

Material: AISI 304 stainless steel

Finish: /8 /15

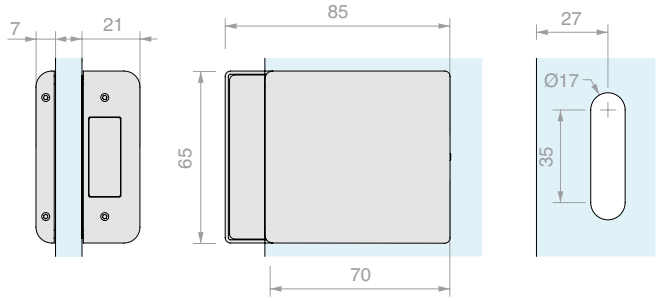

Art.	For glass	Qty
SR1224	From **8** to **12** mm	1 Pc

COUNTERLOCK SERIES SR118

Material: AISI 304 stainless steel

Finish: /8 /15

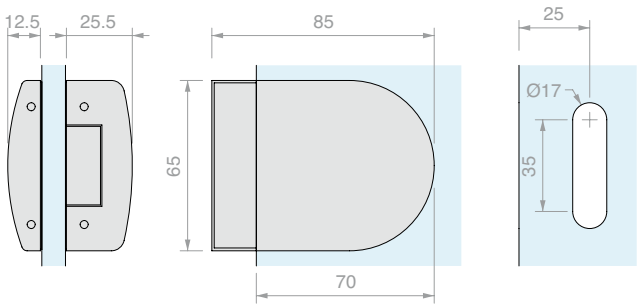

Art.	For glass	Qty
SRC118	From **8** to **12** mm	1 Pc

STRIKING PLATE

Material: Stainless steel

Compatible with: SR1220, SR119, SRS1180, SR118

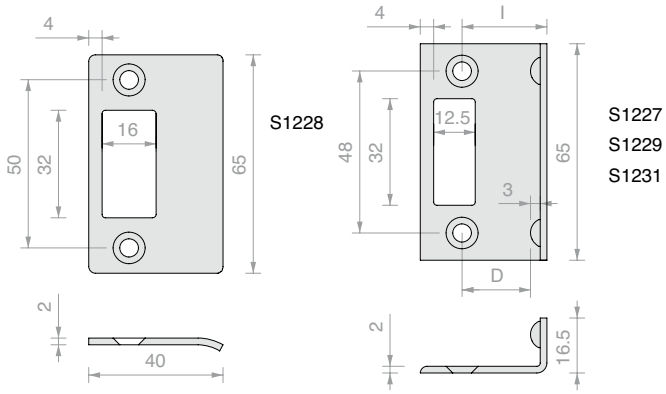

Art.	For glass	l	D	Qty
S1228	-	-		1 Pc
S1227	**8** mm	**19** mm	**14** mm	1 Pc
S1229	**10** mm	**21** mm	**16** mm	1 Pc
S1231	**12** mm	**23** mm	**18** mm	1 Pc

S120 LOCK BODY FOR JAMBS WITH HOLE FOR EUROPEAN CYLINDER

Material: AISI 304 stainless steel

Finish: /8 /15

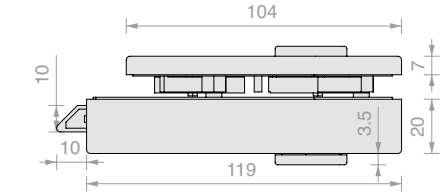

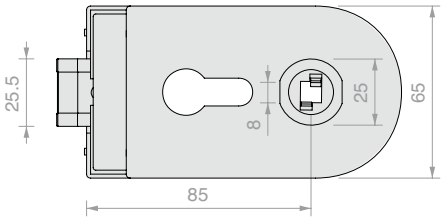

Art.	For glass	Latch	Qty
S1203CORP	From **8** to **12** mm	Mechanical	1 Pc

S120 LOCK BODY WITH HOLE FOR EUROPEAN CYLINDER

Material: AISI 304 stainless steel

Finish: /8 /15

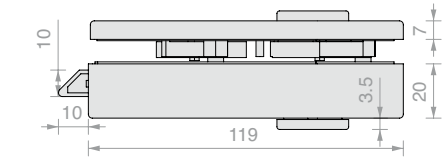

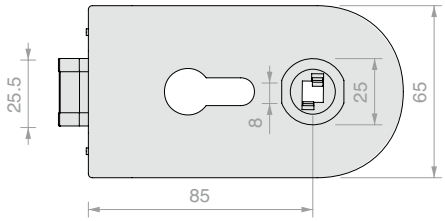

Art.	For glass	Latch	Qty
S1201CORP	From **8** to **12** mm	Mechanical	1 Pc

LOCK NOTCH S120

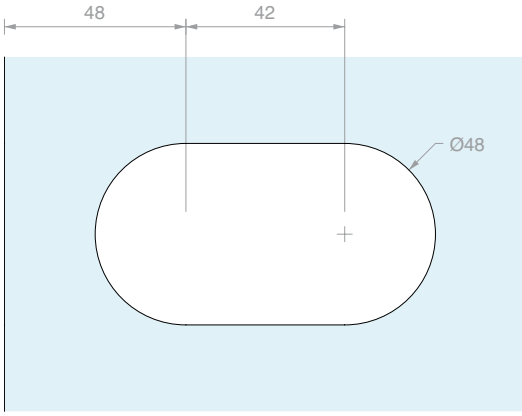

S120 FOR LOCK BODY FOR JAMBS WITH PATENTED KEY

Material: AISI 304 stainless steel

Finish: /8 /15

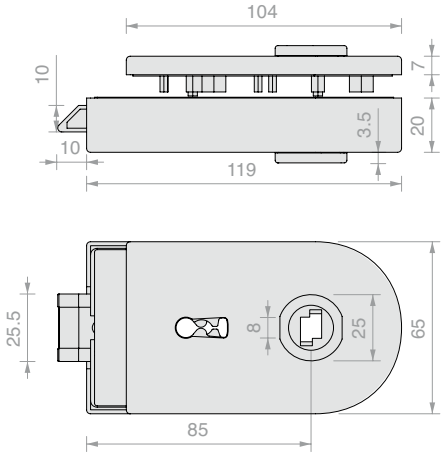

Art.	For glass	Latch	Qty
S1207KCORP	From **8** to **12** mm	Mechanical	1 Pc

S120 LOCK BODY WITH PATENT KEY

Material: AISI 304 stainless steel

Finish: /8 /15

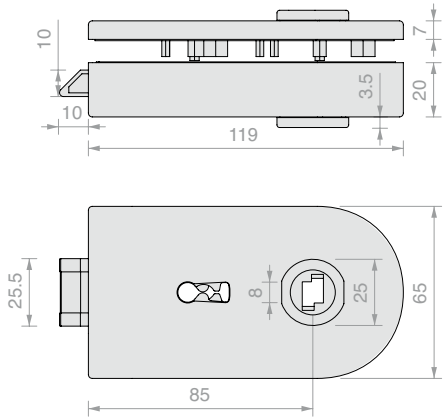

Art.	For glass	Latch	Qty
S1205KCORP	From **8** to **12** mm	Mechanical	1 Pc

LOCK NOTCH S120

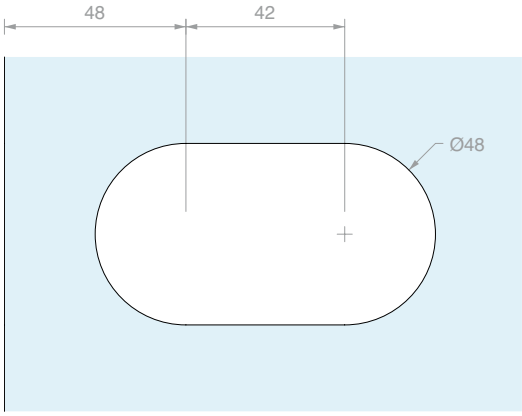

COUNTERLOCK WITH STRIKING PLATE

Material: AISI 304 stainless steel

Finish: /8 /15

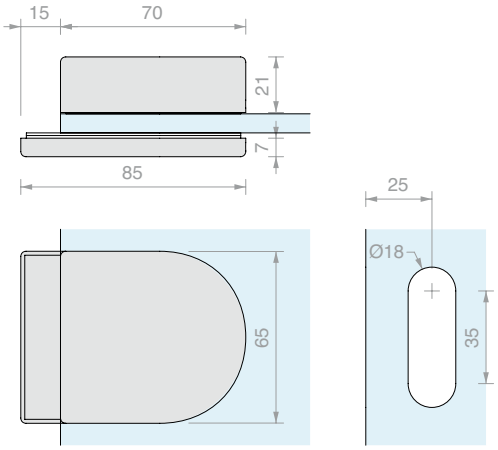

Art.	For glass	Qty
S1211	From **8** to **12** mm	1 Pc

COUNTERLOCK WITHOUT STRIKING PLATE

Material: AISI 304 stainless steel

Finish: /8 /15

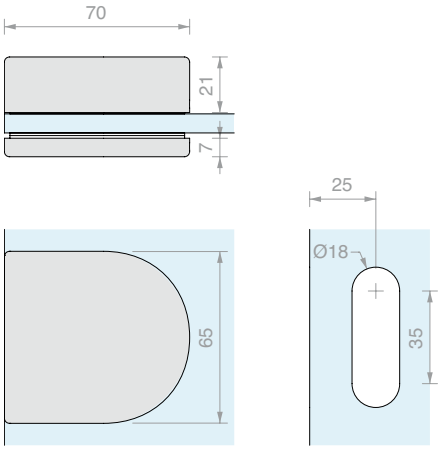

Art.	For glass	Qty
S1209	From **8** to **12** mm	1 Pc

STRIKING PLATE

Material: Stainless steel

Compatible with series S120

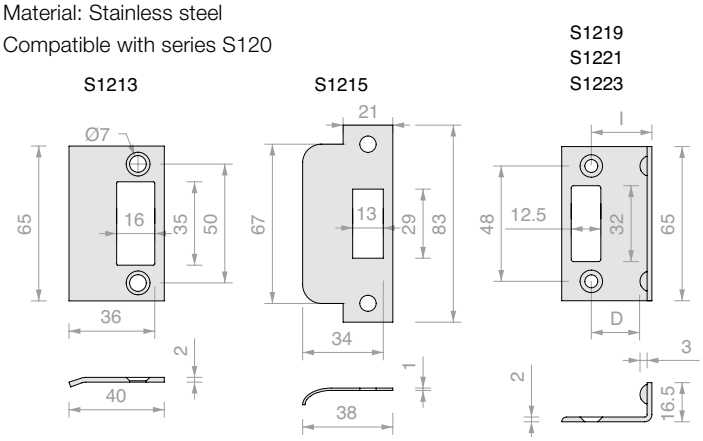

Art.	For glass	I	D	Qty
S1213	-	-	-	1 Pc
S1215	-	-	-	1 Pc
S1219	**8** mm	**24** mm	**19** mm	1 Pc
S1221	**10** mm	**28** mm	**23** mm	1 Pc
S1223	**12** mm	**30** mm	**25** mm	1 Pc

S1600 LOCK BODY FOR JAMBS WITH HOLE FOR EUROPEAN CYLINDER

Material: AISI 304 stainless steel

Finish: /8 /15

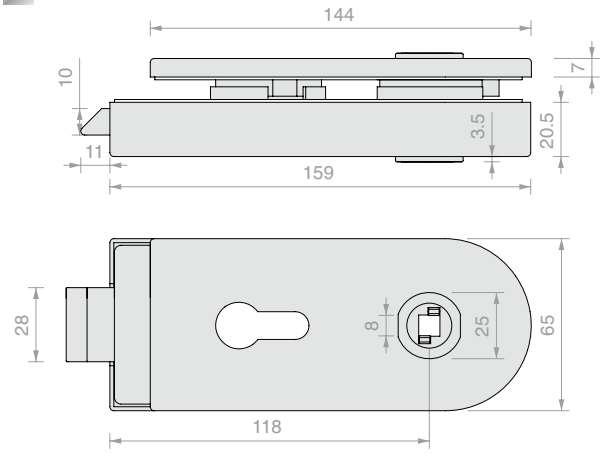

Art.	For glass	Latch	Qty
STL02CORP	From **10** to **12** mm	Mechanical	1 Pc

S1600 LOCK BODY WITHOUT HOLE

Material: AISI 304 stainless steel

Finish: /8 /15

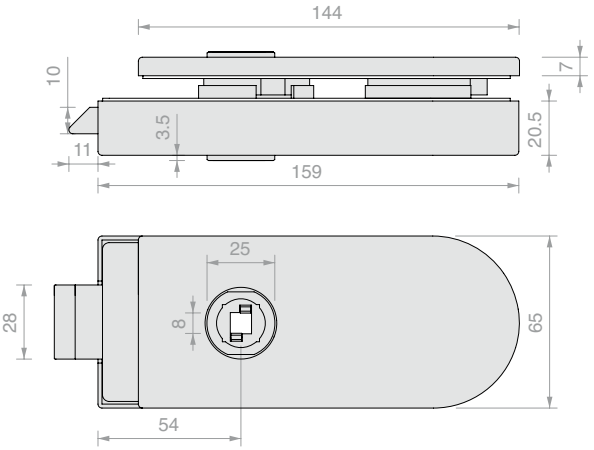

Art.	For glass	Latch	Qty
STL06CORP	From **10** to **12** mm	Mechanical	1 Pc

S1600 LOCK BODY WITH HOLE FOR EUROPEAN CYLINDER

Material: AISI 304 stainless steel

Finish: /8 /15

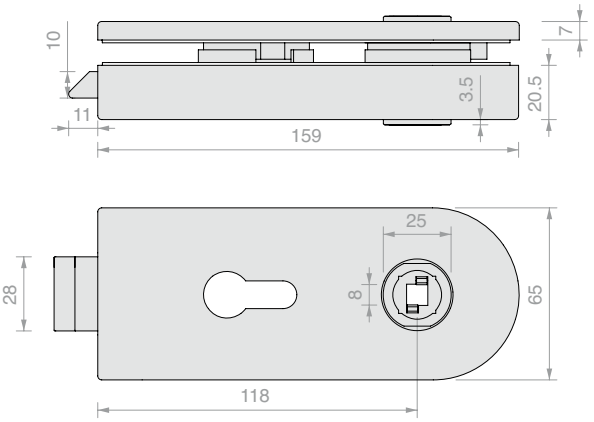

Art.	For glass	Latch	Qty
STL04CORP	From **10** to **12** mm	Mechanical	1 Pc

LOCK CASE WITH WITH STOP

Material: AISI 304 stainless steel

Finish: /8 /15

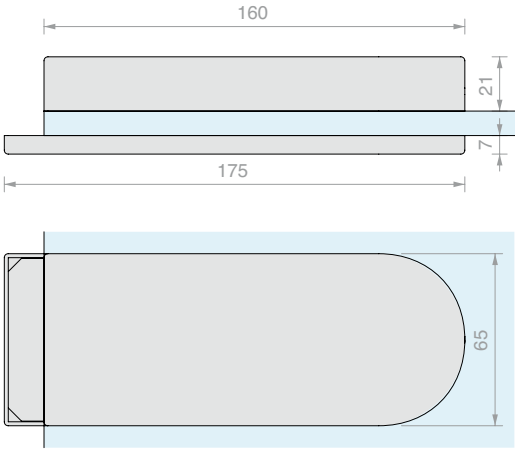

Art.	For glass	Qty
STL05	From **10** to **12** mm	1 Pc

LOCK CASE WITHOUT STRIKE JAMB

Material: AISI 304 stainless steel

Finish: /8 /15

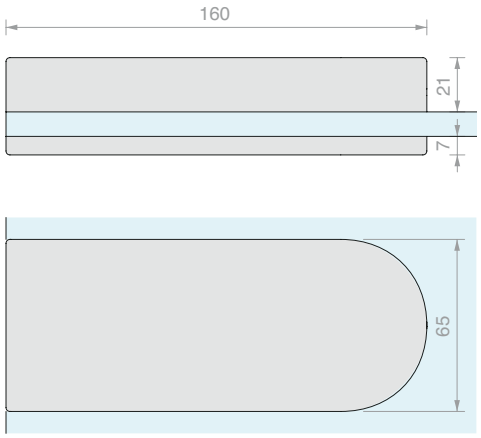

Art.	For glass	Qty
STL07	From **10** to **12** mm	1 Pc

STL LOCK AND COUNTERLOCK NOTCH

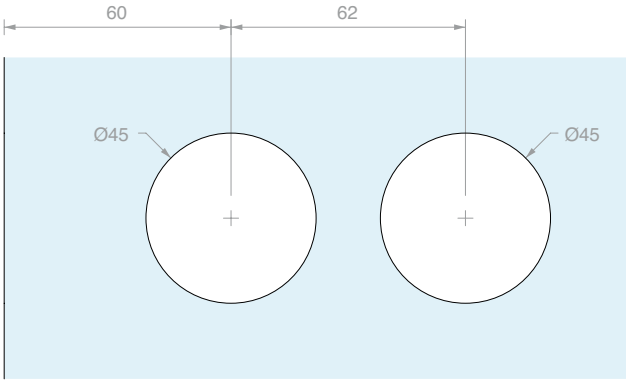

SQUARE HANDLE

Material: AISI 304 stainless steel

Finish: /8 /15

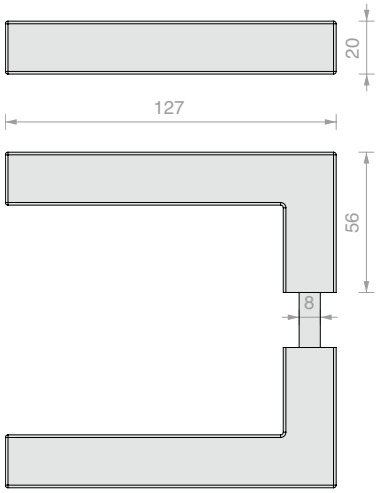

Art.	Q.ty
SR119M	1 Pc

CURVED ROUND HANDLE

Material: AISI 304 stainless steel

Finish: /8 /15

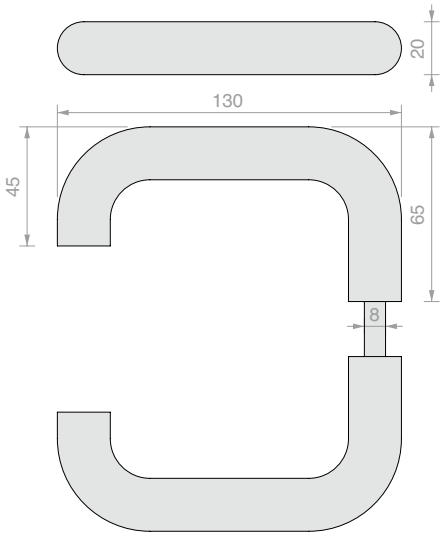

Art.	Q.ty
M107	1 Pc

ROUND HANDLE

Material: AISI 304 stainless steel

Finish: /8 /15

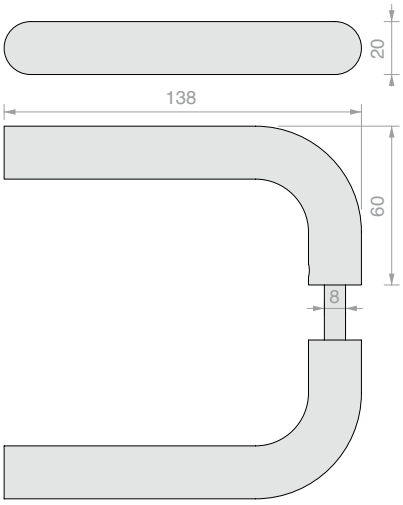

Art.	Q.ty
M135	1 Pc

SQUARE MECHANICAL LOCK BODY WITH HOLE FOR EUROPEAN CYLINDER

Material: Aluminium

Finish: /6 /88 /97

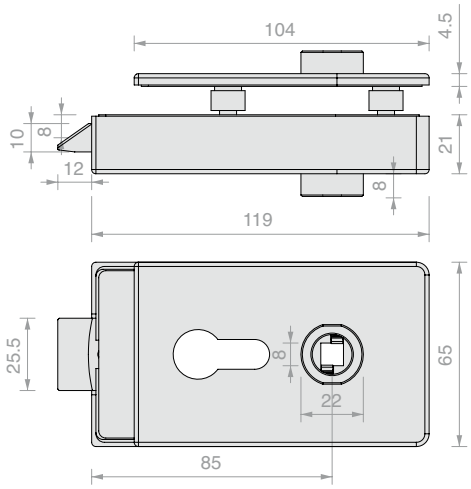

Art.	For glass	Latch	Qty
AP2203BORH	From **8** to **13.5** mm	Mechanical	1 Pc

SQUARE MECHANICAL LOCK BODY WITHOUT HOLE FOR CYLINDER

Material: Aluminium

Finish: /6 /88 /97

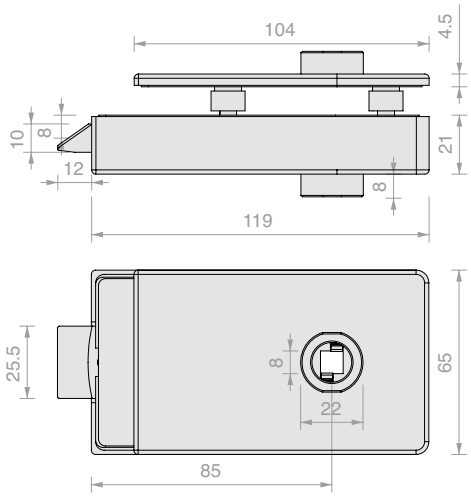

Art.	For glass	Latch	Qty
AP2203BOST	From **8** to **13.5** mm	Mechanical	1 Pc

SQUARE MECHANICAL LOCK BODY WITH PATENT KEY

Material: Aluminium

Finish: /6 /88 /97

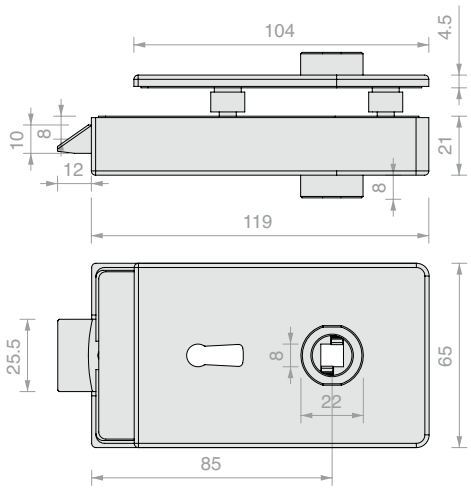

Art.	For glass	Latch	Qty
AP2203BOPA	From **8** to **13.5** mm	Mechanical	1 Pc

SQUARE MECHANICAL LOCK BODY WITH DOOR KNOB AND FREE/OCCUPIED

Material: Aluminium

Finish: **/6** /88 /97

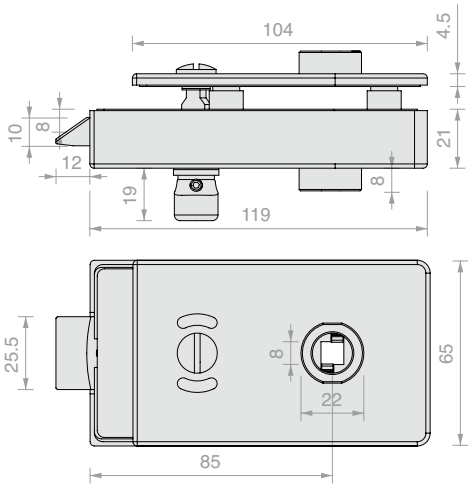

Art.	For glass	Latch	Qty
AP2203BOKS	From **8** to **13.5** mm	Mechanical	1 Pc

SQUARE MAGNETIC LOCK BODY WITH HOLE FOR EUROPEAN CYLINDER

Material: Aluminium

Finish: **/6** /88 /97

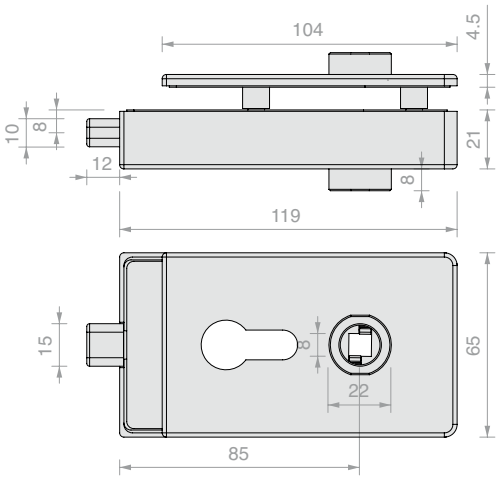

Art.	For glass	Latch	Qty
AP2203BOMG	From **8** to **13.5** mm	Magnetic	1 Pc

GLASS NOTCH FOR SERIES APRO2203

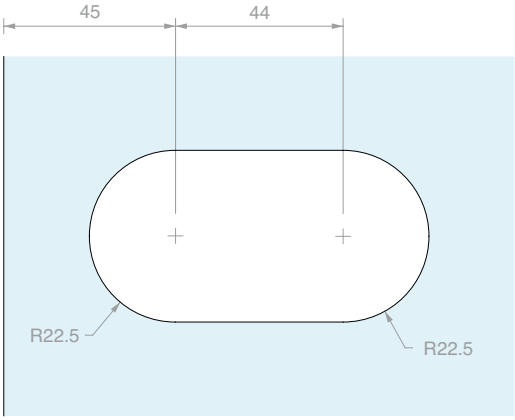

ROUNDED MECHANICAL LOCK BODY WITH HOLE FOR EUROPEAN CYLINDER

Material: Aluminium

Finish: **/6** /88 /97

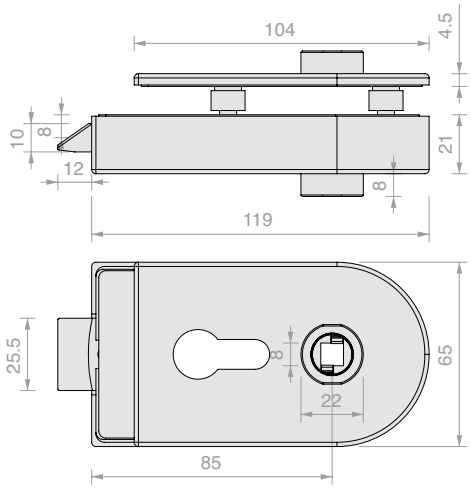

Art.	For glass	Latch	Qty
AP1203BORH	From **8** to **13.5** mm	Mechanical	1 Pc

ROUNDED MECHANICAL LOCK BODY WITHOUT HOLE FOR CYLINDER

Material: Aluminium

Finish: **/6** /88 /97

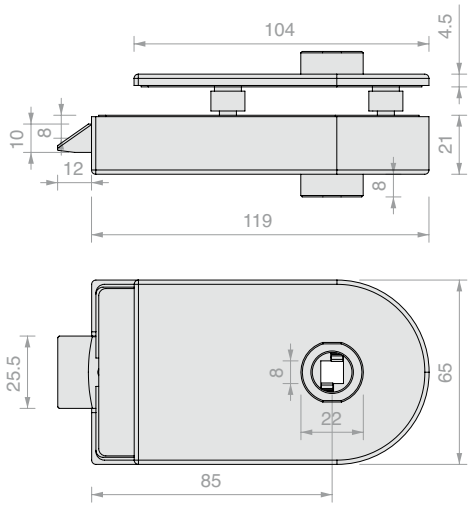

Art.	For glass	Latch	Qty
AP1203BOST	From **8** to **13.5** mm	Mechanical	1 Pc

ROUNDED MECHANICAL LOCK BODY WITH PATENT KEY

Material: Aluminium

Finish: **/6** /88 /97

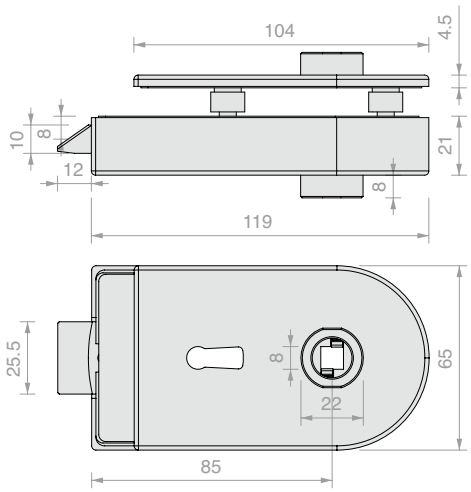

Art.	For glass	Latch	Qty
AP1203BOPA	From **8** to **13.5** mm	Mechanical	1 Pc

ROUNDED MECHANICAL LOCK BODY WITH DOOR KNOB AND FREE/OCCUPIED

Material: Aluminium

Finish: **/6** /88 /97

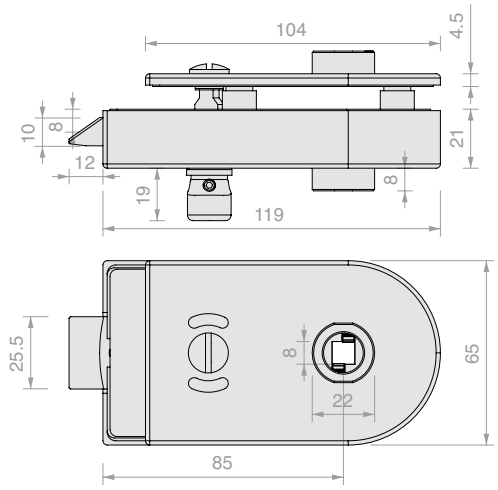

Art.	For glass	Latch	Qty
AP1203BOKS	From **8** to **13.5** mm	Mechanical	1 Pc

MAGNET

ROUNDED MAGNETIC LOCK BODY WITH HOLE FOR EUROPEAN CYLINDER

Material: Aluminium

Finish: **/6** /88 /97

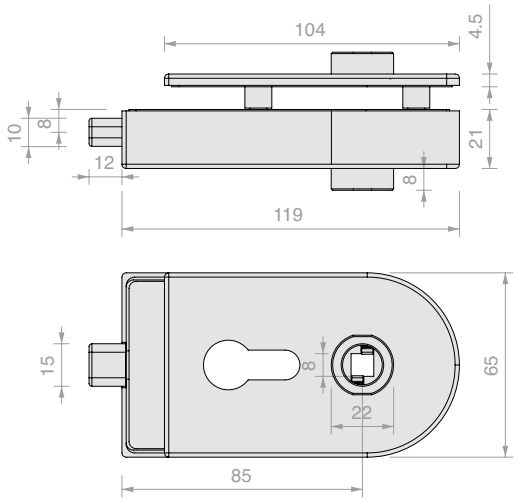

Art.	For glass	Latch	Qty
AP1203BOMG	From **8** to **13.5** mm	Magnetic	1 Pc

GLASS NOTCH FOR SERIES APRO1203

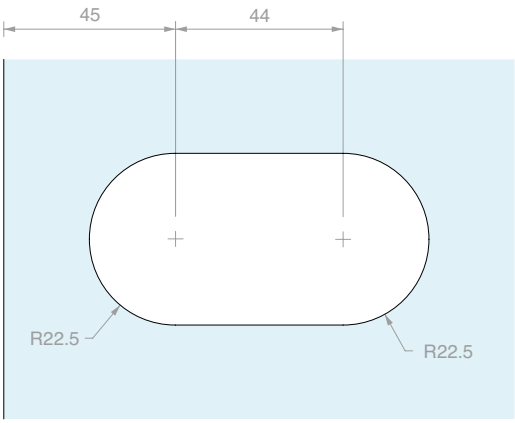

COUNTERLOCK SERIES APRO2203

Material: Aluminium

Finish: /6 /88 /97

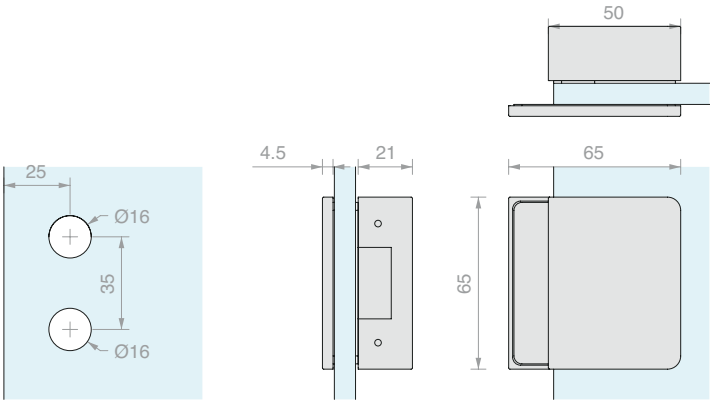

Art.	For glass	Striking plate	Qty
APROIN2203H	From **8** to **12** mm	Mechanical	1 Pc
APROIN2203HM	From **8** to **12** mm	Magnetic	1 Pc

LOCK CASE SERIES APRO1203

Material: Aluminium

Finish: /6 /88 /97

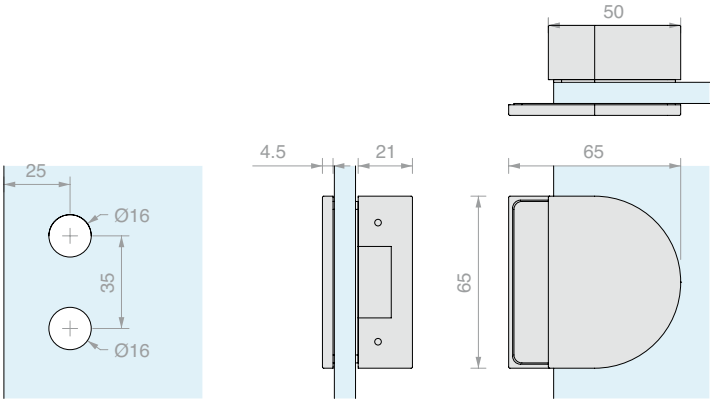

Art.	For glass	Striking plate	Qty
APROIN1203H	From **8** to **12** mm	Mechanical	1 Pc
APROIN1203HM	From **8** to **12** mm	Magnetic	1 Pc

STRIKING PLATE FOR MECHANICAL LATCH

Material: Steel

Finish: /9 /R2

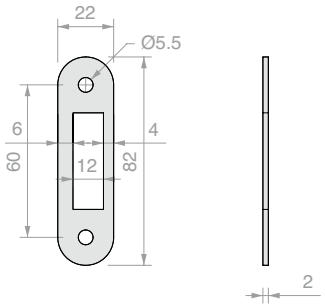

Art.	Qty
SERH17	1 Pc

STRIKING PLATE FOR MAGNETIC LATCH

Material: Steel

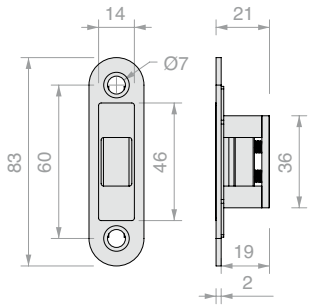

Art.	Qty
APROIN17M	1 Pc

EUROPEAN CYLINDER KEY/KEY

Material: Brass

European cylinder with 3 keys

Finish: /95

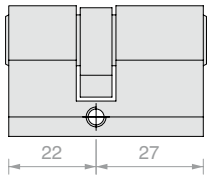

Art.	Key	Qty
CISA2227U	Single	1 Pc
CISA2227D	Different	1 Pc

KEY/ROTATING DOOR KNOB CYLINDER

Material: Brass

European cylinder with 3 keys

Finish: /1 /3 /45

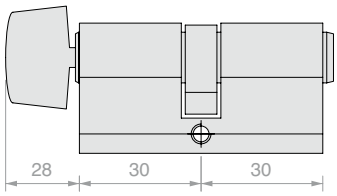

Art.	Key	Qty
S1217U	Single	1 Pc

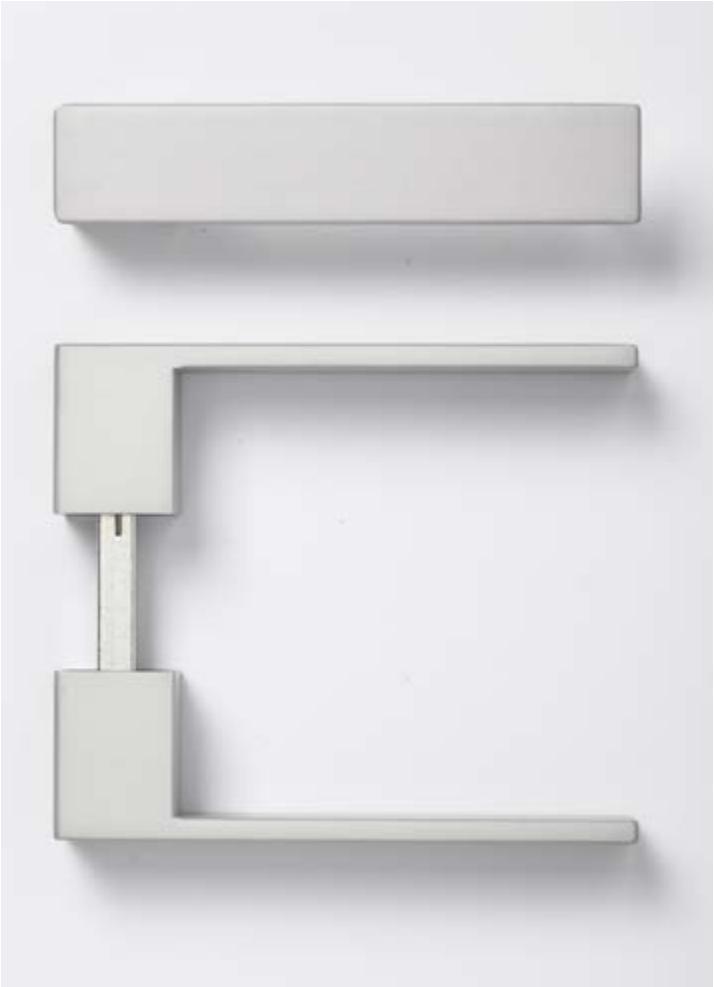

PAIR OF SQUARE CLOSED HANDLES

Material: Aluminium

Finish: /6 /88 /97

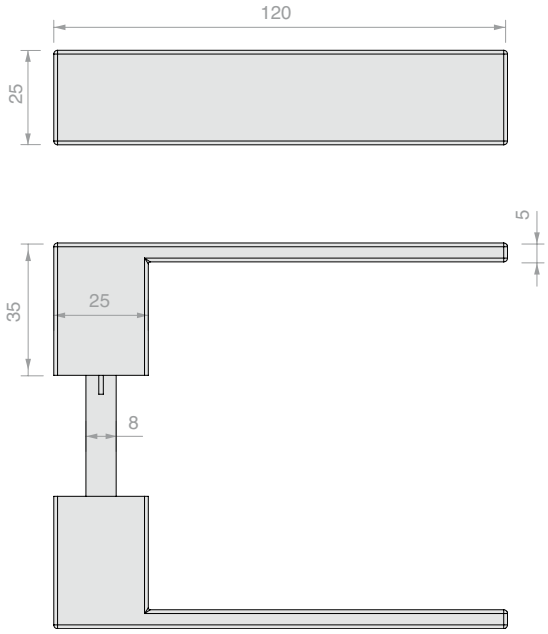

Art.	Qty
APHANDSC	1 Pc

PAIR OF SQUARE OPEN HANDLES

Material: Aluminium

Finish: /6 /88 /97

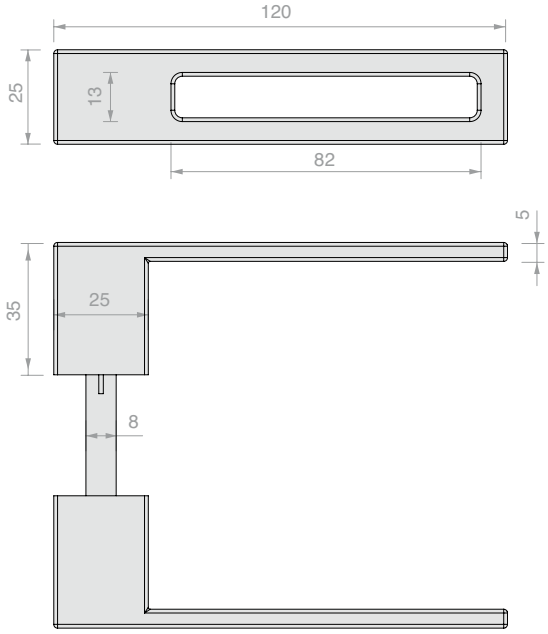

Art.	Qty
APHANDSH	1 Pc

PAIR OF SQUARE CLOSED HANDLES WITH FIXED DOOR KNOB

Material: Aluminium

The door knob side acts only as a grip

Finish: /6 /88 /97

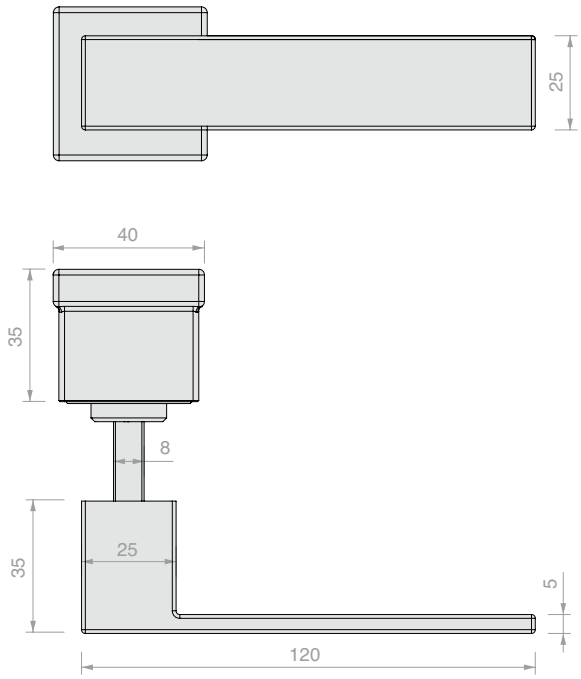

Art.	Qty
APHAFKSC	1 Pc

PAIR OF SQUARE OPEN HANDLES WITH FIXED DOOR KNOBS

Material: Aluminium

The door knob side acts only as a grip

Finish: /6 /88 /97

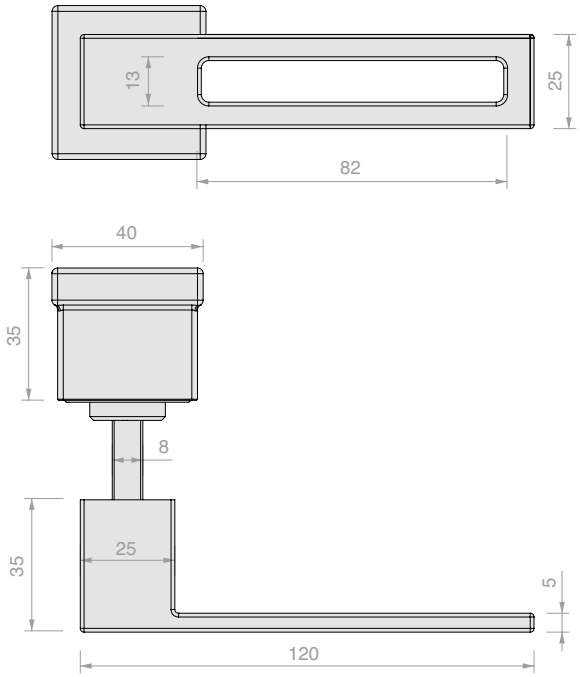

Art.	Qty
APHAFKSH	1 Pc

PAIR OF ROUNDED CLOSED HANDLES

Material: Aluminium

Finish: /6 /88 /97

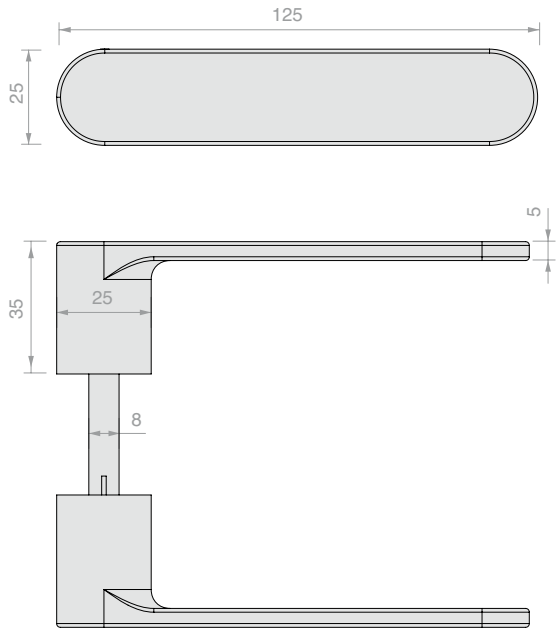

Art.	Qty
APHANDRC	1 Pc

PAIR OF ROUNDED OPEN HANDLES

Material: Aluminium

Finish: /6 /88 /97

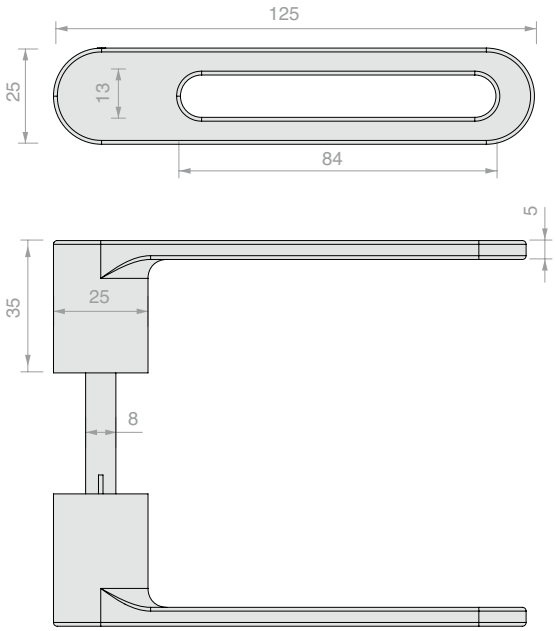

Art.	Qty
APHANDRH	1 Pc

PAIR OF ROUNDED CLOSED HANDLES WITH FIXED DOOR KNOB

Material: Aluminium

The door knob side acts only as a grip

Finish: /6 /88 /97

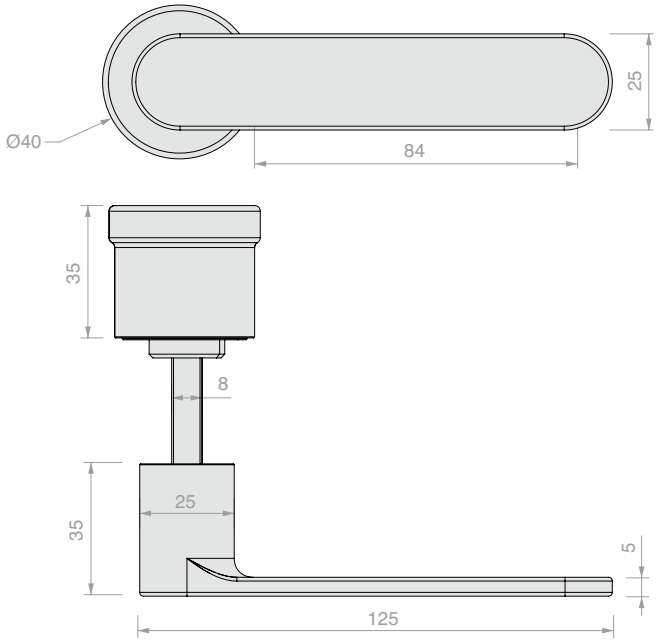

Art.	Qty
APHAFKRC	1 Pc

PAIR OF ROUNDED OPEN HANDLES WITH FIXED DOOR KNOB

Material: Aluminium

The door knob side acts only as a grip

Finish: /6 /88 /97

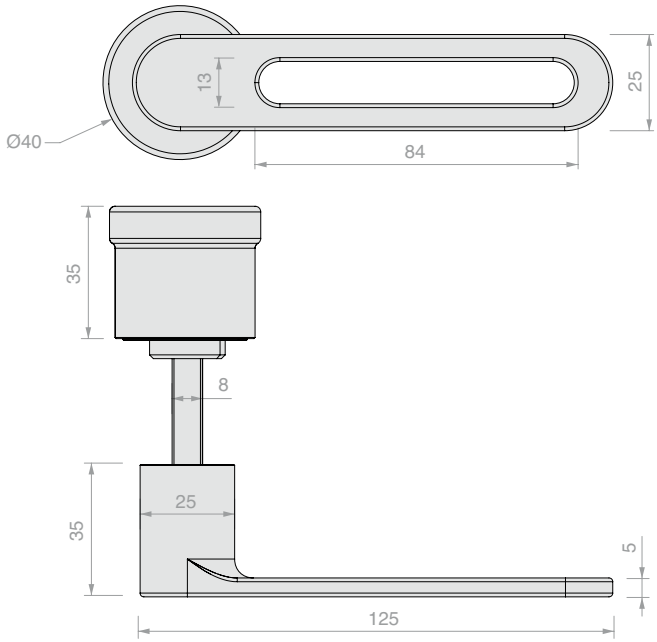

Art.	Qty
APHAFKRH	1 Pc

APRO SERIES 40 CENTRAL LOCK BODY, WITH HOLE FOR EUROPEAN CYLINDER

Material: Aluminium

Finish: /88 /97 /R2

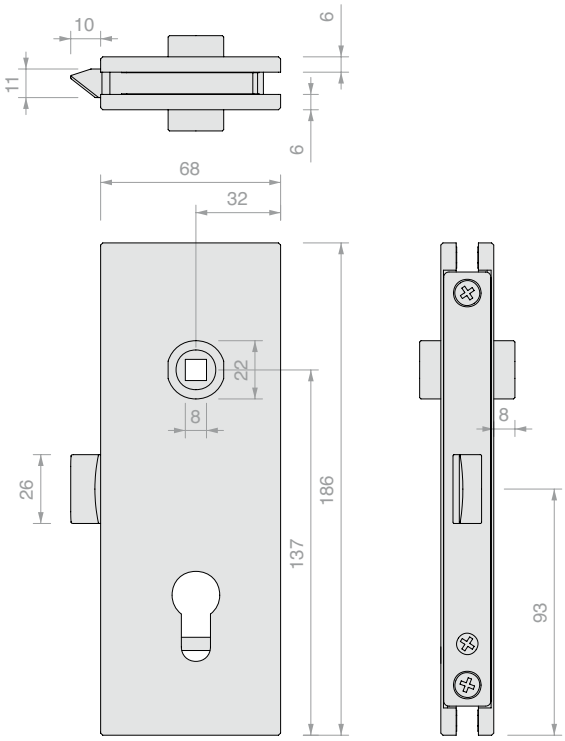

Art.	For glass	Latch	Qty
APRO4403BORH	From **8** to **13.5** mm	Mechanical	1 Pc

APRO SERIES 40 CENTRAL LOCK BODY, WITH HOLE FOR EUROPEAN CYLINDER

Material: Aluminium

Finish: /88 /97 /R2

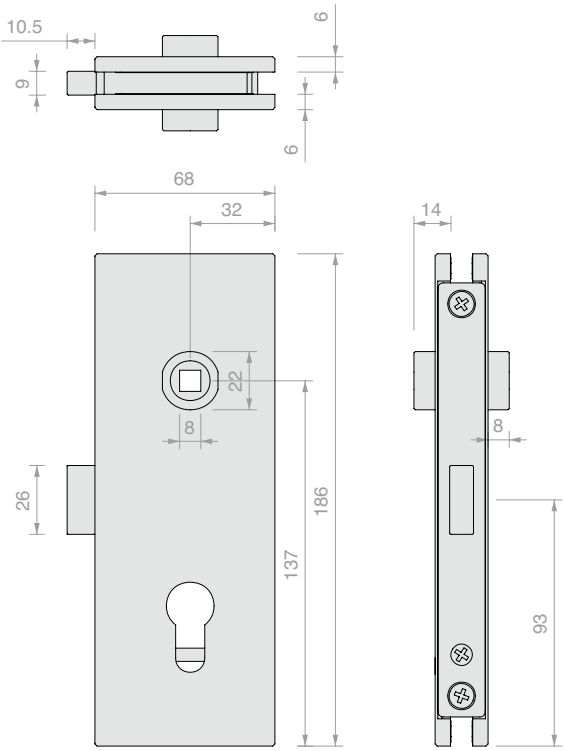

Art.	For glass	Latch	Qty
APRO4406BORH	From **8** to **13.5** mm	Magnetic	1 Pc

APRO SERIES 40 LEFT LOCK BODY, WITH HOLE FOR EUROPEAN CYLINDER

Material: Aluminium

Finish: /88 /97 /R2

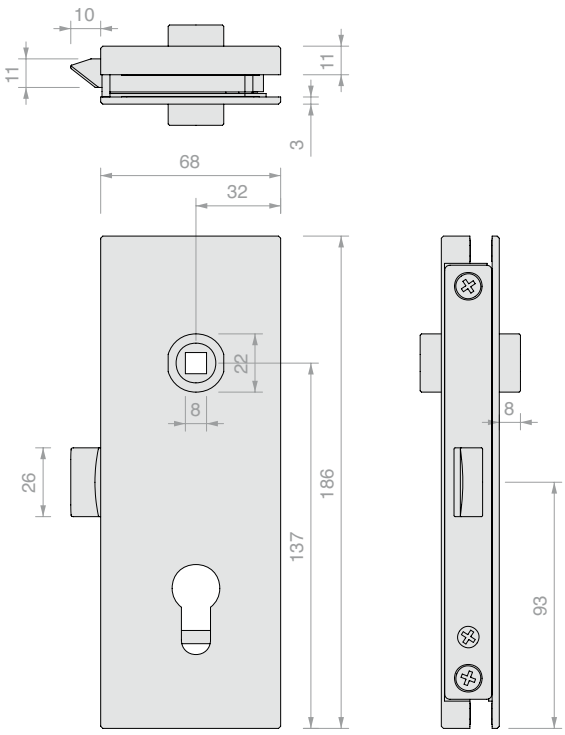

Art.	For glass	Latch	Qty
APRO4503BORH	From **8** to **13.5** mm	Mechanical	1 Pc

APRO SERIES 40 LEFT LOCK BODY, WITH HOLE FOR EUROPEAN CYLINDER

Material: Aluminium

Finish: /88 /97 /R2

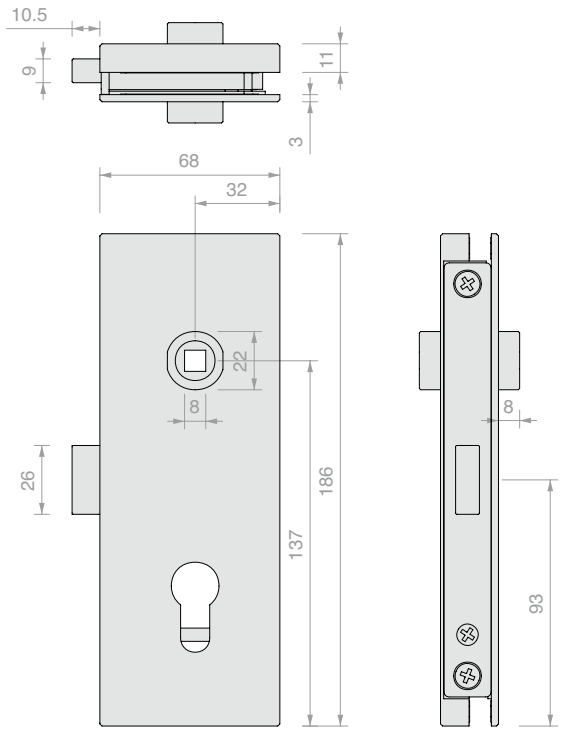

Art.	For glass	Latch	Qty
APRO4506BORH	From **8** to **13.5** mm	Magnetic	1 Pc

APRO SERIES 40 RIGHT LOCK BODY, WITH HOLE FOR EUROPEAN CYLINDER

Material: Aluminium

Finish: /88 /97 /R2

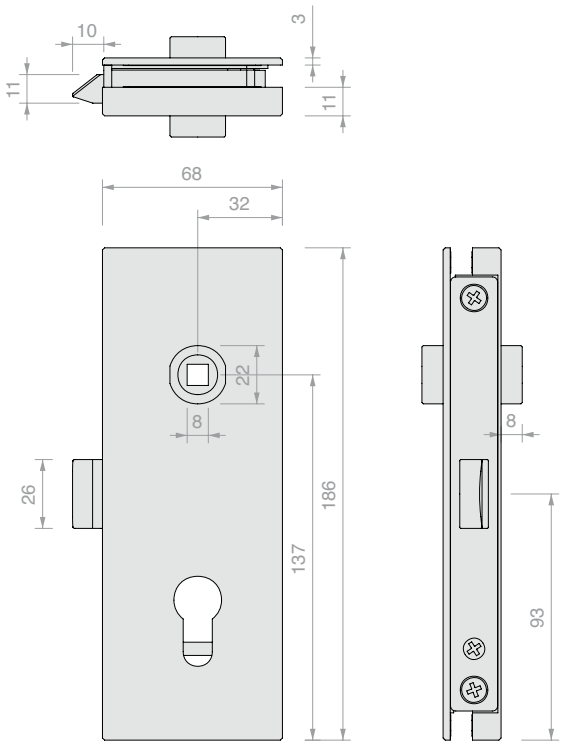

Art.	For glass	Latch	Qty
APRO4603BORH	From **8** to **13.5** mm	Mechanical	1 Pc

APRO SERIES 40 RIGHT LOCK BODY, WITH HOLE FOR EUROPEAN CYLINDER

Material: Aluminium

Finish: /88 /97 /R2

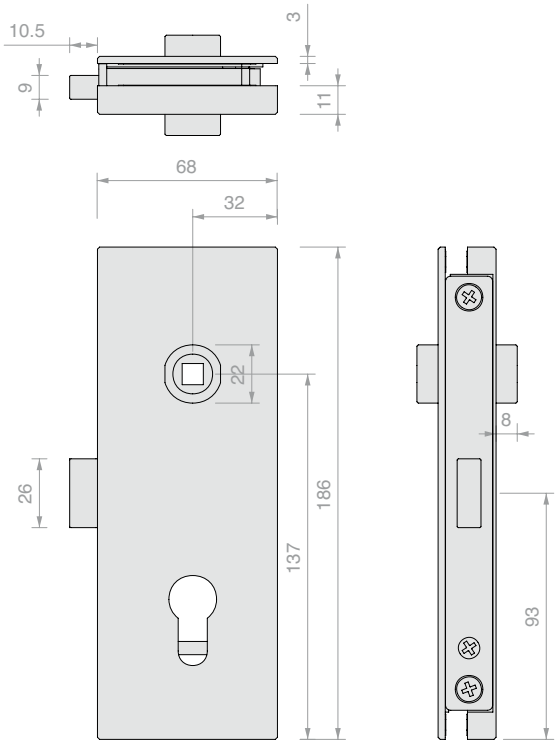

Art.	For glass	Latch	Qty
APRO4606BORH	From **8** to **13.5** mm	Magnetic	1 Pc

APRO VERTICAL MODEL LOCK NOTCH

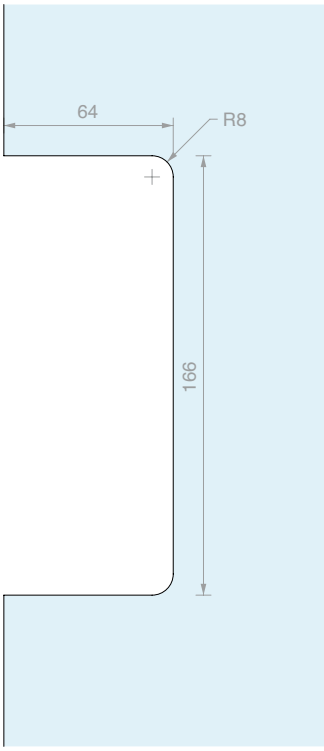

COUNTERLOCK FOR APRO 44 SERIES

Material: Aluminium

Finish: /88 /97 /R2

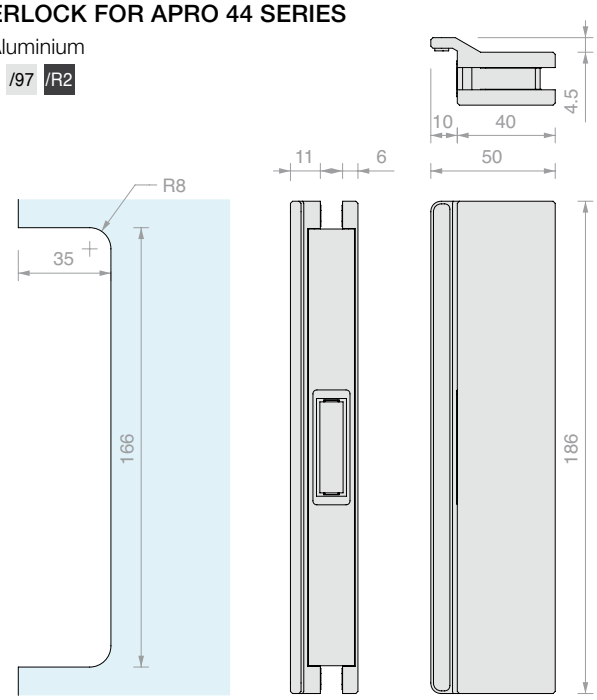

Art.	For glass	Striking plate	Qty
APRO1008	**8** mm	Mechanical	1 Pc
APRO1010	**10** mm	Mechanical	1 Pc
APRO1012	**12** mm	Mechanical	1 Pc
APRO1013	**13.5** mm	Mechanical	1 Pc
APRO4008	**8** mm	Magnetic	1 Pc
APRO4010	**10** mm	Magnetic	1 Pc
APRO4012	**12** mm	Magnetic	1 Pc
APRO4013	**13.5** mm	Magnetic	1 Pc

HANDLE FOR APRO SERIES 40

Material: Aluminium

Finish: /88 /97 /R2

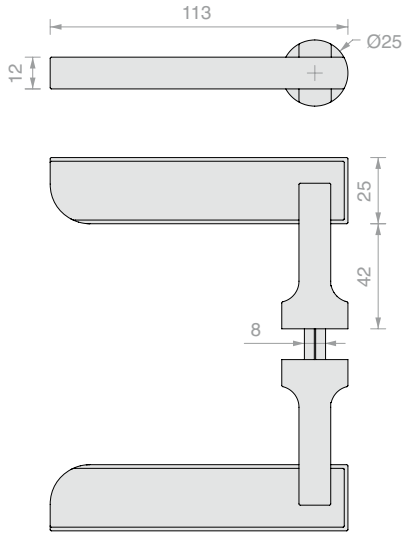

Art.	Q.ty
APHANDTC	1 Pc

HANDLE FOR APRO SERIES 40 KNURLED

Material: Aluminium

Finish: /88 /97 /R2

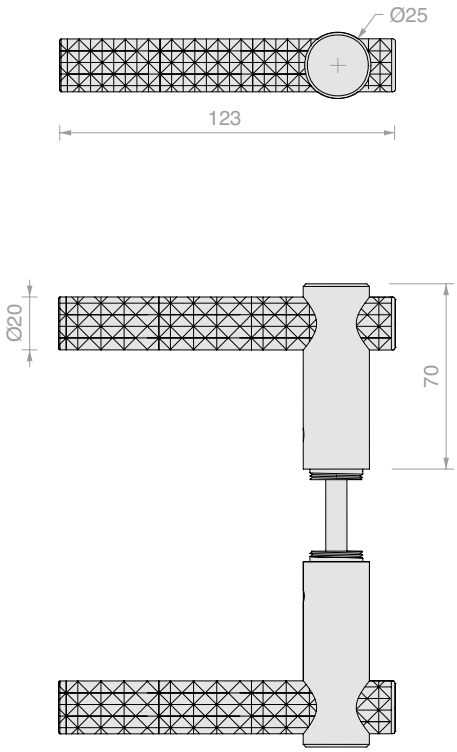

Art.	Q.ty
APHANDGD	1 Pc

APRO STRIKING PLATE

Material: Aluminium

Finish: /7 /R2

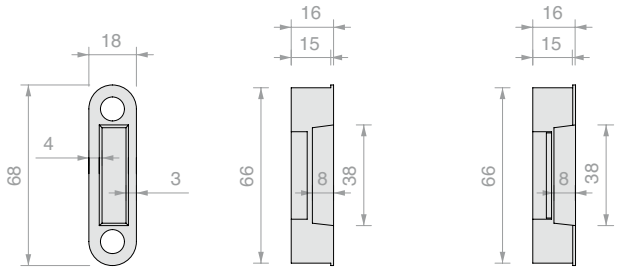

APRO1020 APRO4040

MAGNET

Art.	Striking plate	Qty
APRO1020	Mechanical	1 Pc
APRO4040	Magnetic	1 Pc

ADJUSTABLE APRO STRIKING PLATE

Material: Aluminium

Finish: /7

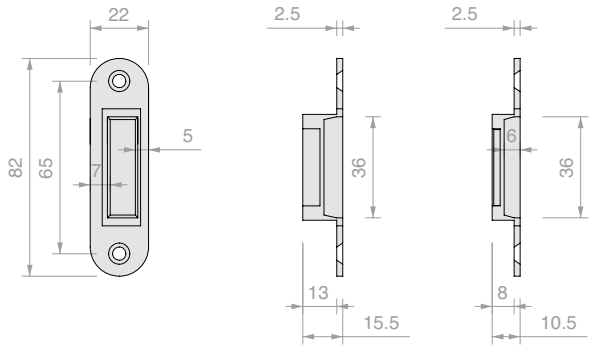

APRO1050 APRO4080

MAGNET

Art.	Striking plate	Qty
APRO1050	Mechanical	1 Pc
APRO4080	Magnetic	1 Pc

CYLINDER WITH EUROPEAN PROFILE KEY

Material: Brass

European cylinder with 3 keys

Finish: /1 /3

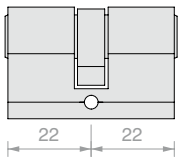

Art.	Key	Qty
LOGS10U	Single	1 Pc
LOGS10D	Different	1 Pc

HOPPE HCS LOCK

Material: Aluminium
Mechanical latch
Finish: /97

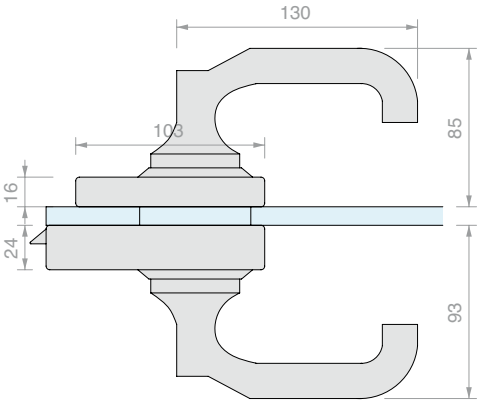

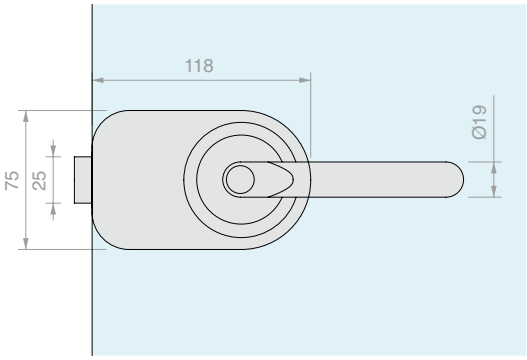

Art.	For glass	Lock	Key	Qty
SERH01	From **8** to **13.5** mm	Lock + lock	Different	1 Pc
SERH03	From **8** to **13.5** mm	Lock + Coin opening	Different	1 Pc
SERH05	From **8** to **13.5** mm	Lock + Free/Occupied indicator	Different	1 Pc
SERH07	From **8** to **13.5** mm	Lock + Door Knob	Different	1 Pc
SERH09	From **8** to **13.5** mm	Door knob + Coin opening	-	1 Pc
SERH11	From **8** to **13.5** mm	Door knob + Free/Occupied indicator	-	1 Pc

HOPPE HCS COUNTERLOCK

Material: Aluminium
Finish: /97

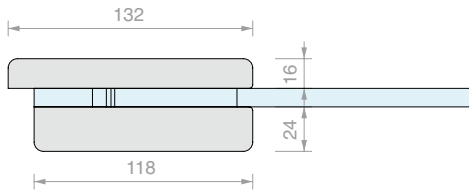

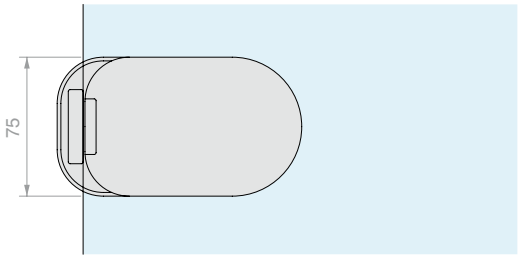

Art.	For glass	Qty
SERH13	From **8** to **13.5** mm	1 Pc

GLASS NOTCH FOR HCS LOCK AND COUNTERLOCK

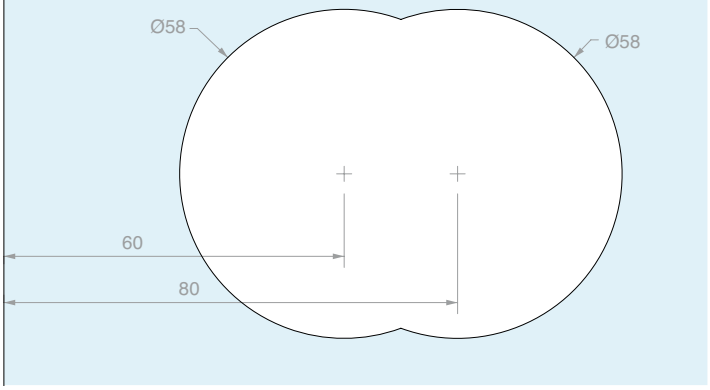

TYPES OF HOPPE HCS LOCK

SERH01

Lock

+

Lock

SERH03

Lock

+

Coin opening

SERH07

Lock

+

Door knob

SERH05

Lock

+

Free/Occupied indicator

SERH09

Door knob

+

Coin opening

SERH11

Door knob

+

Free/Occupied indicator

COUNTERPLATE

Material: Steel

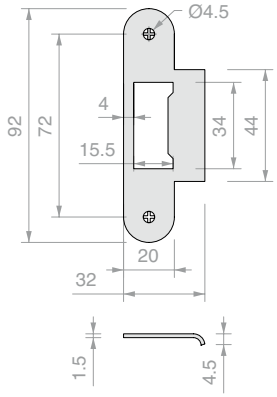

Art.	Q.ty
SERH15	1 Pc

COUNTERPLATE FOR MECHANICAL LATCH

Material: Steel

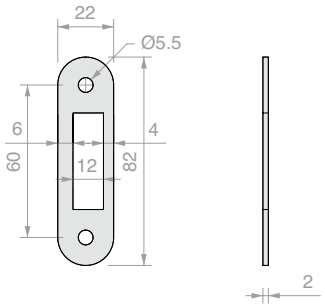

Art.	Q.ty
SERH17	1 Pc

FORMA LOCKS

Material: Aluminium

Supplied with two keys

Finish: /91 /97

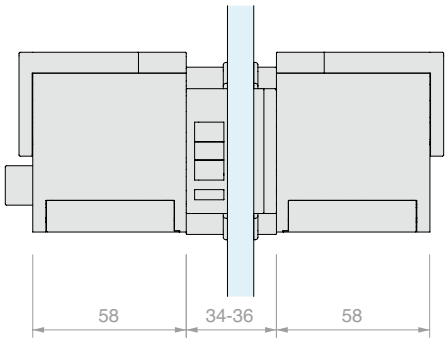

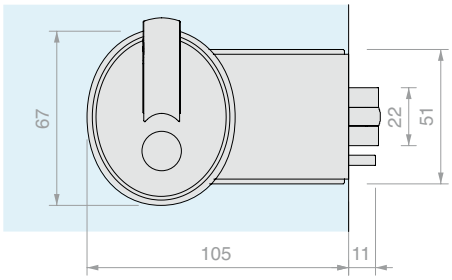

INCLUDES:

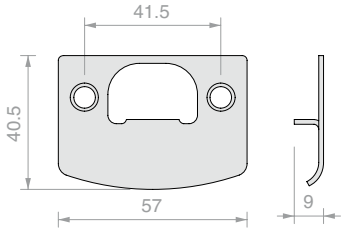

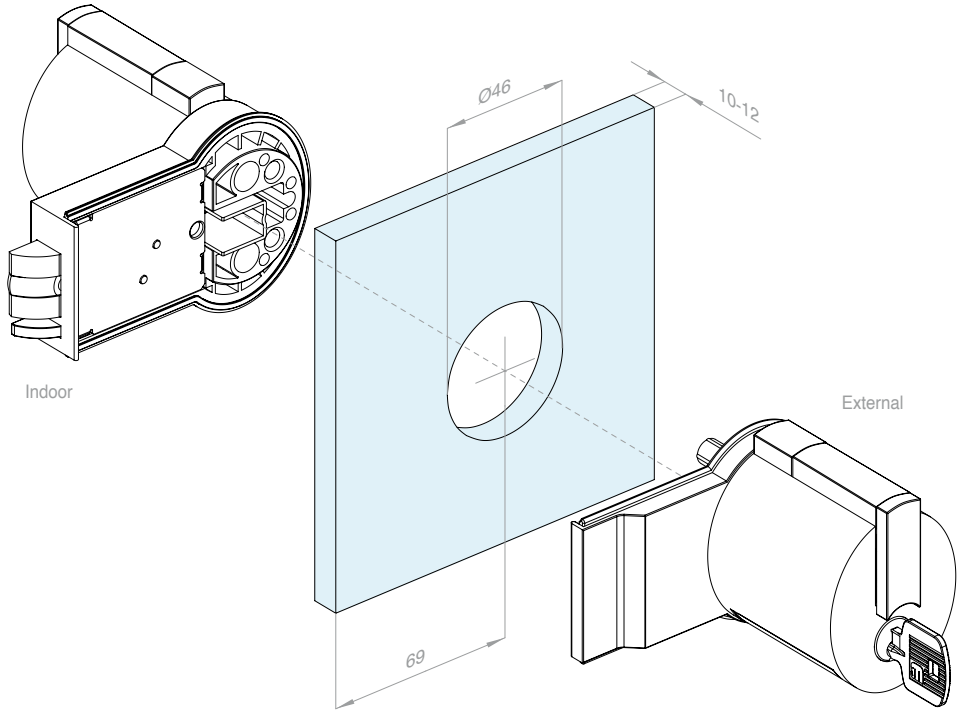

Art.	For glass	Lock	Key	Qty
SERMF15	From **10** to **12** mm	Lock + lock	Single	1 Pc
SERMF13	From **10** to **12** mm	Lock + Emergency device	Single	1 Pc

COUNTERLOCK

Material: Aluminium

Finish: /97

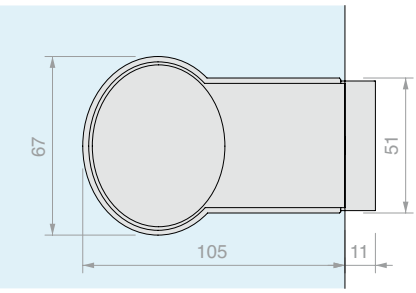

Art.	For glass	Qty
SERMFGL1	From **10** to **12** mm	1 Pc

GLASS NOTCH FOR FORMA LOCK AND COUNTERLOCK

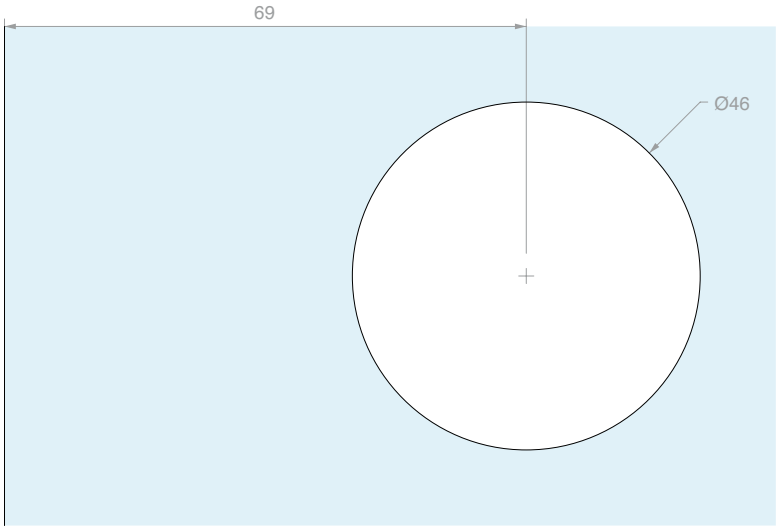

FLOOR-MOUNTED DOOR STOP WITH MAGNET

Material: AISI 304 stainless steel

With stainless steel disc to be fitted by UV bonding

Finish: /8

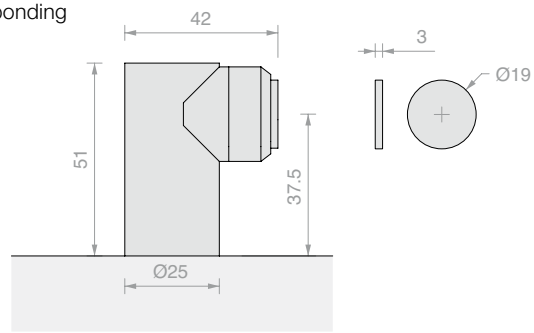

Art.	Q.ty
FPT01	1 Pc

SINGLE CEILING DOOR STOP

Material: AISI 304 stainless steel

Finish: /8

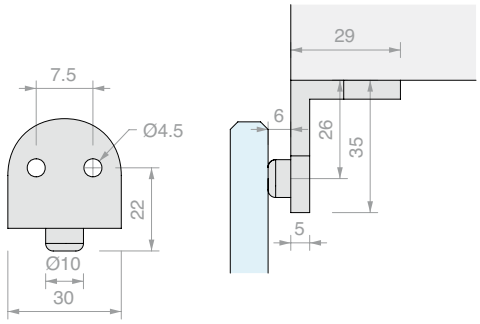

Art.	Q.ty
FPT03	1 Pc

DOUBLE CEILING DOOR STOP

Material: AISI 304 stainless steel

Finish: /8

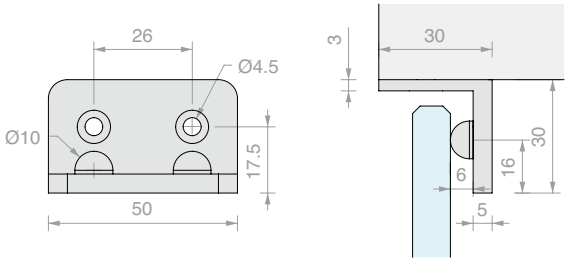

Art.	Q.ty
FPT21	1 Pc

DOOR STOP WITH GLASS FIXING

Material: AISI 304 stainless steel

Recommended glass hole size Ø22 mm

Finish: /8

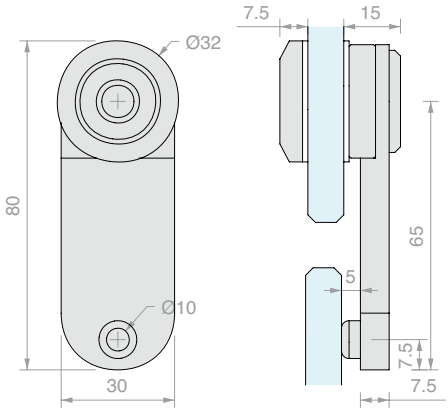

Art.	For glass	Qty
FPT07	From **10** to **12** mm	1 Pc

FLOOR DOOR STOP WITH RUBBER

Material: AISI 304 stainless steel

Finish: /8 /15

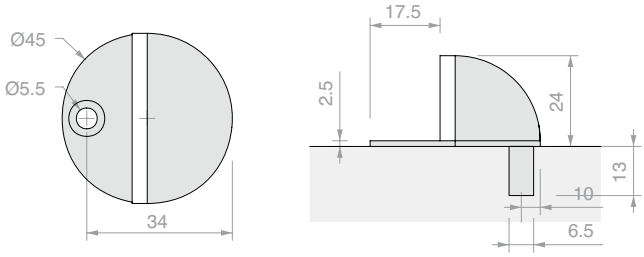

Art.	Q.ty
FPT09	1 Pc

FLOOR DOOR STOP WITH RUBBER RING

Material: AISI 304 stainless steel

Finish: /8 /15

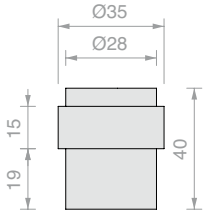

Art.	Q.ty
FPT11	1 Pc

DOOR STOP WITH MAGNET

Material: Iron

Finish: /1 /2 /3

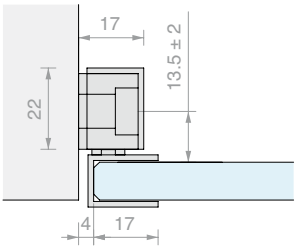

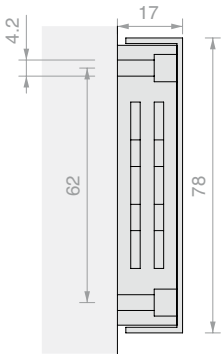

Art.	Description	For glass	Qty
CAL005	Magnet with cover	-	1 Pc
CAL006	Counterplate	**8** mm	1 Pc
CAL007	Counterplate	**10** mm	1 Pc

MAGNET WITH WALL FIXING

Material: AISI 304 stainless steel

With stainless steel disc to be fitted by UV bonding

Finish: /9

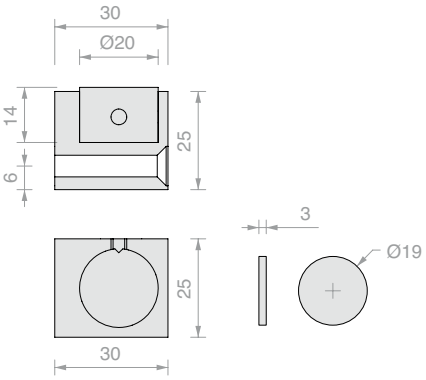

Art.	Q.ty
CALMU30	1 Pc

GLASS LIP ADHESIVE GASKET

APPLICATIONS: Closing gaps around the edge to ensure a seal that protects against water, wind, dust, insects, noise and and changes in temperature.

Description: GLASS LIP is an adhesive edge gasket for glass doors and partition walls which is quick and easy to install, applied using the mounting template Art. GSL812 which helps to position the gasket in the centre of the glass along the whole length of the edge. It comprises a lip gasket which is quick to install with the incorporated transparent high adhesion two-sided tape. The special structure of the soft lips, with tear-off strips to shorten them, can be used to seal gaps from 2.5 to 7 mm.

Properties:

GLASS LIP can be used on glass thicknesses between 8 mm and 13.52 mm

APPLICATION: All glass doors.

FIXING TYPE: With transparent high adhesion VHB two-sided tape for -40°C to +150°C

GASKETS: Lip gasket made from coextruded thermoplastic, adjustable (patented system).

FINISH: Embossed

PATENTED SYSTEM

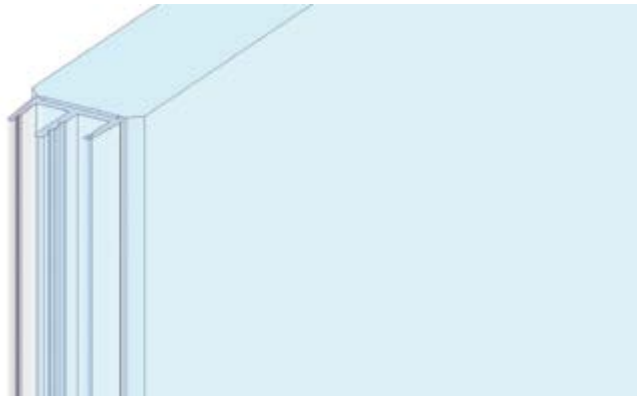

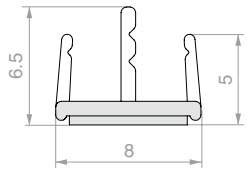

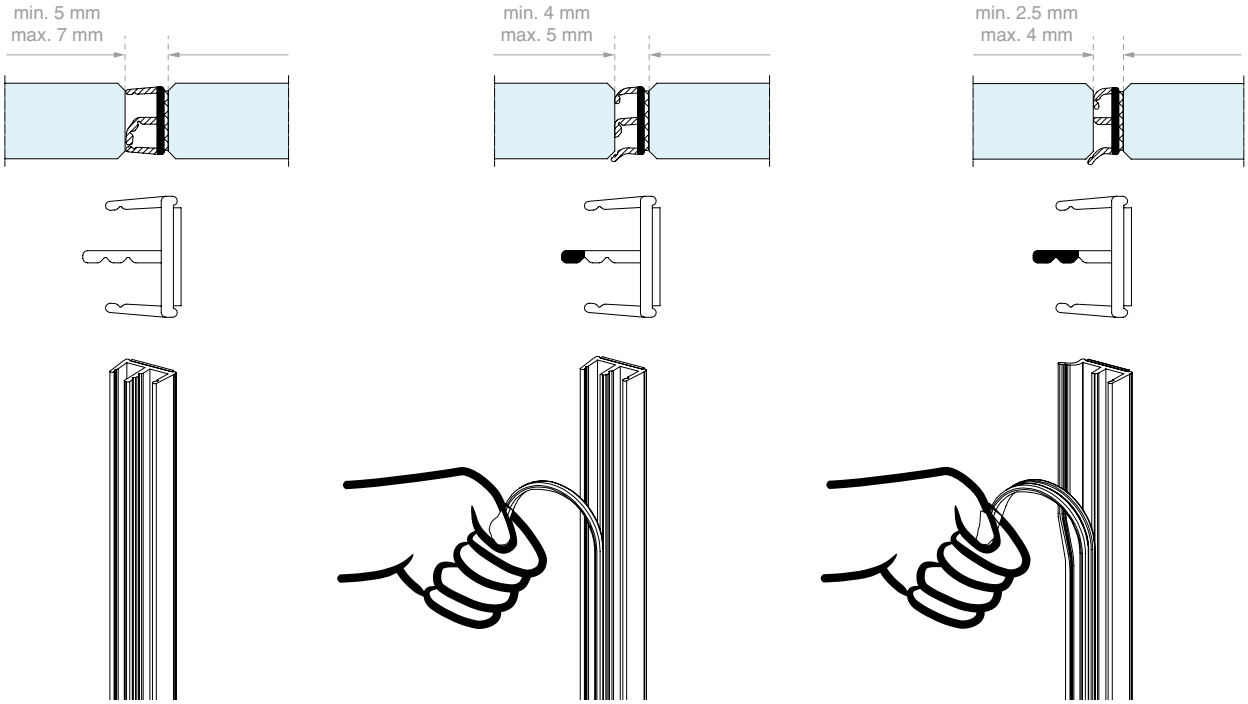

Art.	For glass	Length	Qty
GSL3000	From **8** to **13.5** mm	**3000** mm	1 Pc

MOUNTING TEMPLATE GSL3000

Plastic mounting template for positioning the centre of the gasket in the centre of the glass along the whole length.
For use with Art. GSL3000

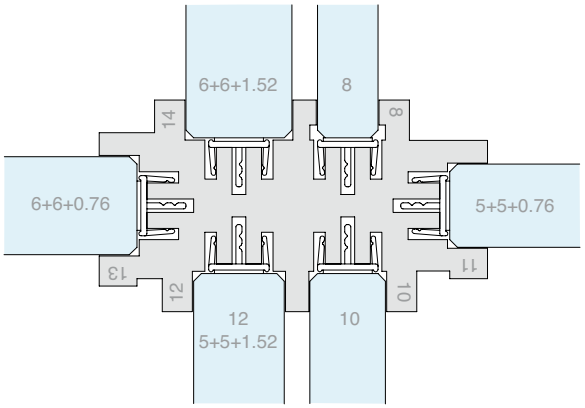

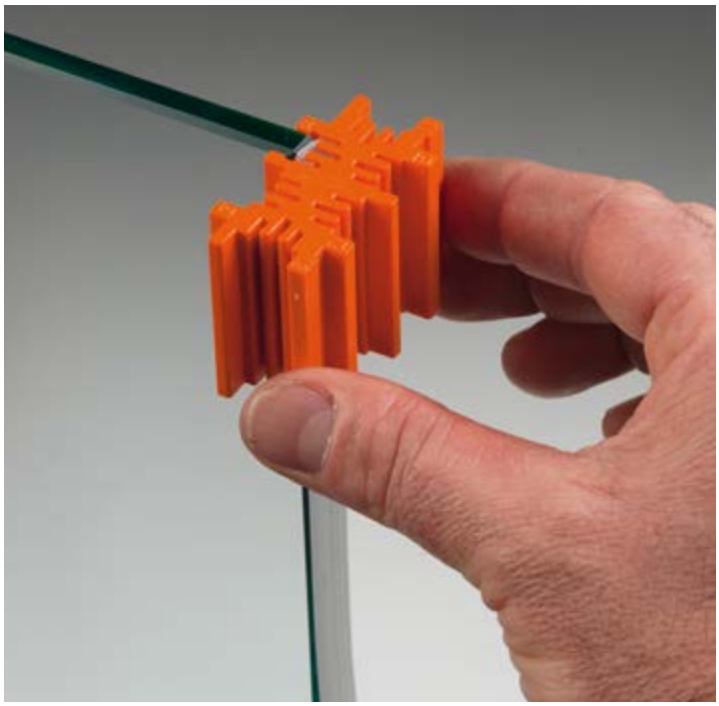

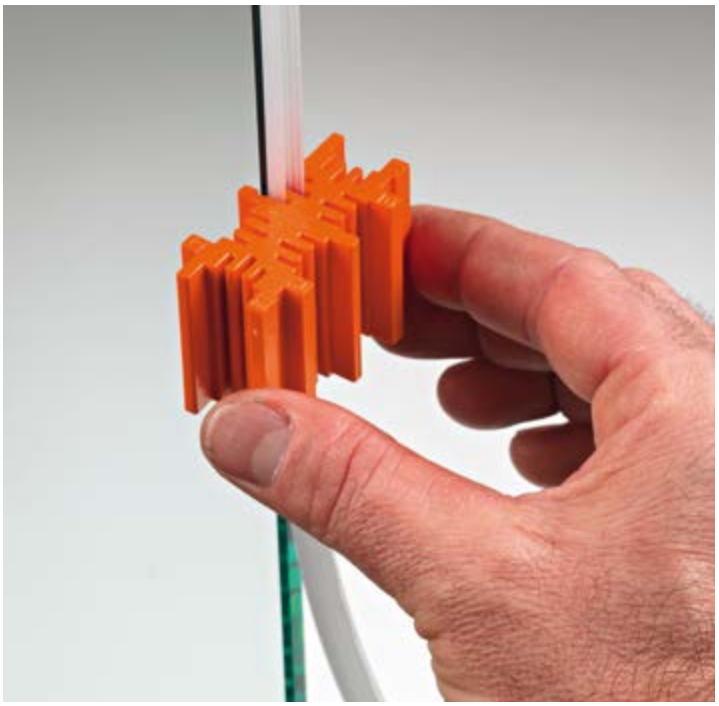

Art.	For glass	Qty
GSL812	From **8** to **13.5** mm	1 Pc

DEGREASING WIPE

Properties: Disposable wipe impregnated with isopropyl alcohol

Art.	Q.ty
GSLSVL	1 Pc

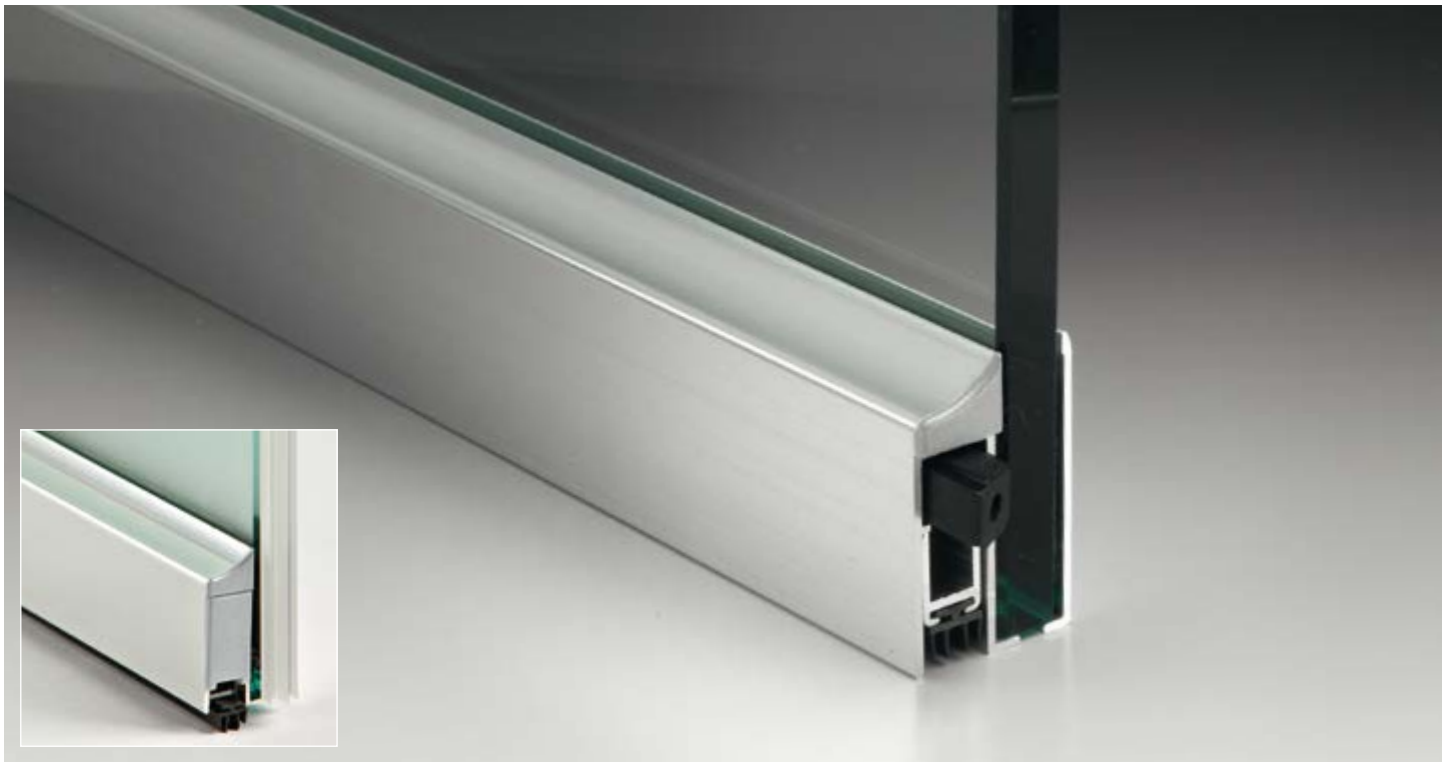

LOWER PROFILE WITH GASKET GLASS 100 AUTOMATIC

Application: Closing gaps on the floor to ensure a seal that protects against water, wind, dust, insects, noise and and changes in temperature.

Description: Automatic under door gasket with tilting friction movement (the gasket lowers first on the hinge side and then on the handle side).

Mechanism can be removed on the hinge side after fixing.

Travel 14 mm.

Galvanised steel spring and 20% fibreglass PA thrust bearing.

Aluminium alloy 6060 T6 profiles. Finishing cap included.

Properties: The mechanism can be removed from both the hinge and handle side, exclusive system (patented).

Option for replacement parts.

FIXING TYPE:

With transparent high adhesion VHB two-sided tape for -40°C to +150°C

Finish: /97 /R2

Tested for 200,000 closings.

ANODISED COATING 8/15 MICRON

PATENTED SYSTEM

SYSTEM FOR INTERIORS

One kit allows for either closing direction

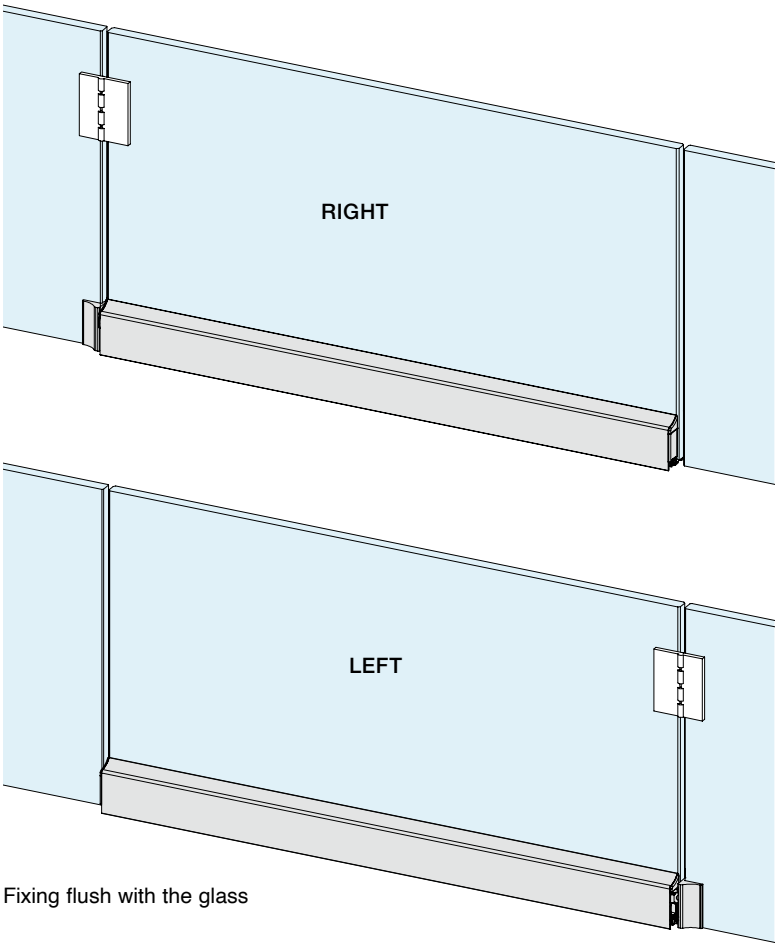

Fixing flush with the glass

HANDLING AND CLEANING:

Wash with warm water and neutral detergent; use a soft cloth or a non-abrasive sponge.

Rinse thoroughly with clean water. Dry with a soft cloth.

ON REQUEST length up to 1500 mm

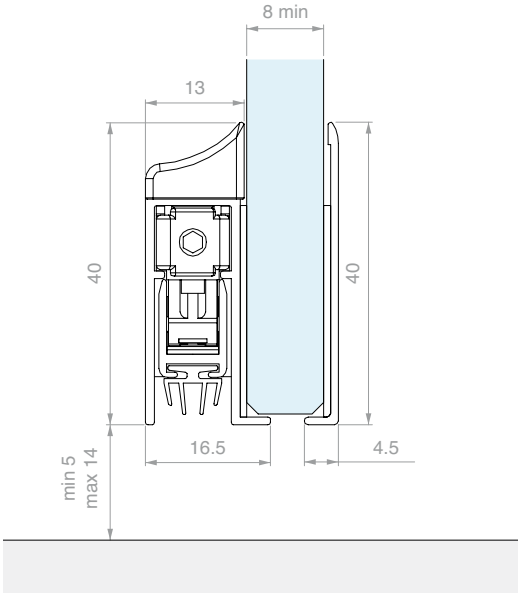

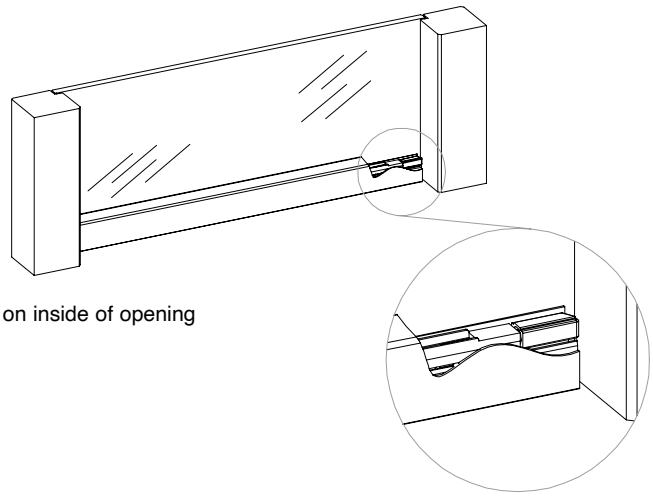

Fitting on inside of opening

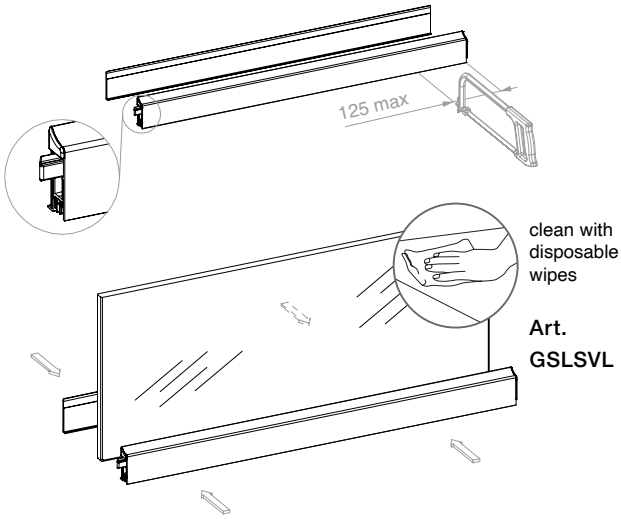

Art.
GSLSVL

Fixed using high strength two-sided tape

FLUSH FIT KIT - KIT INCLUDES

Material: plastic. Properties: Flush fit kit for doors fitted flush with fixed glass.
Application: on fixed glass with high strength two-sided tape.

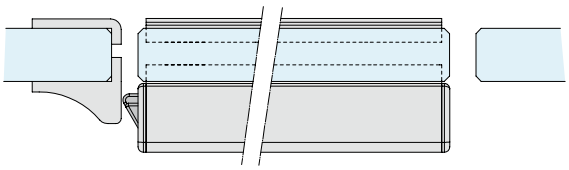

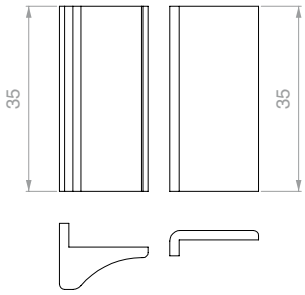

Art.	Length	Glass width	Qty
GS01875	**900** mm	min **775** - max **900** mm	1 Pc
GS01100	**1025** mm	min **900** - max **1025** mm	1 Pc

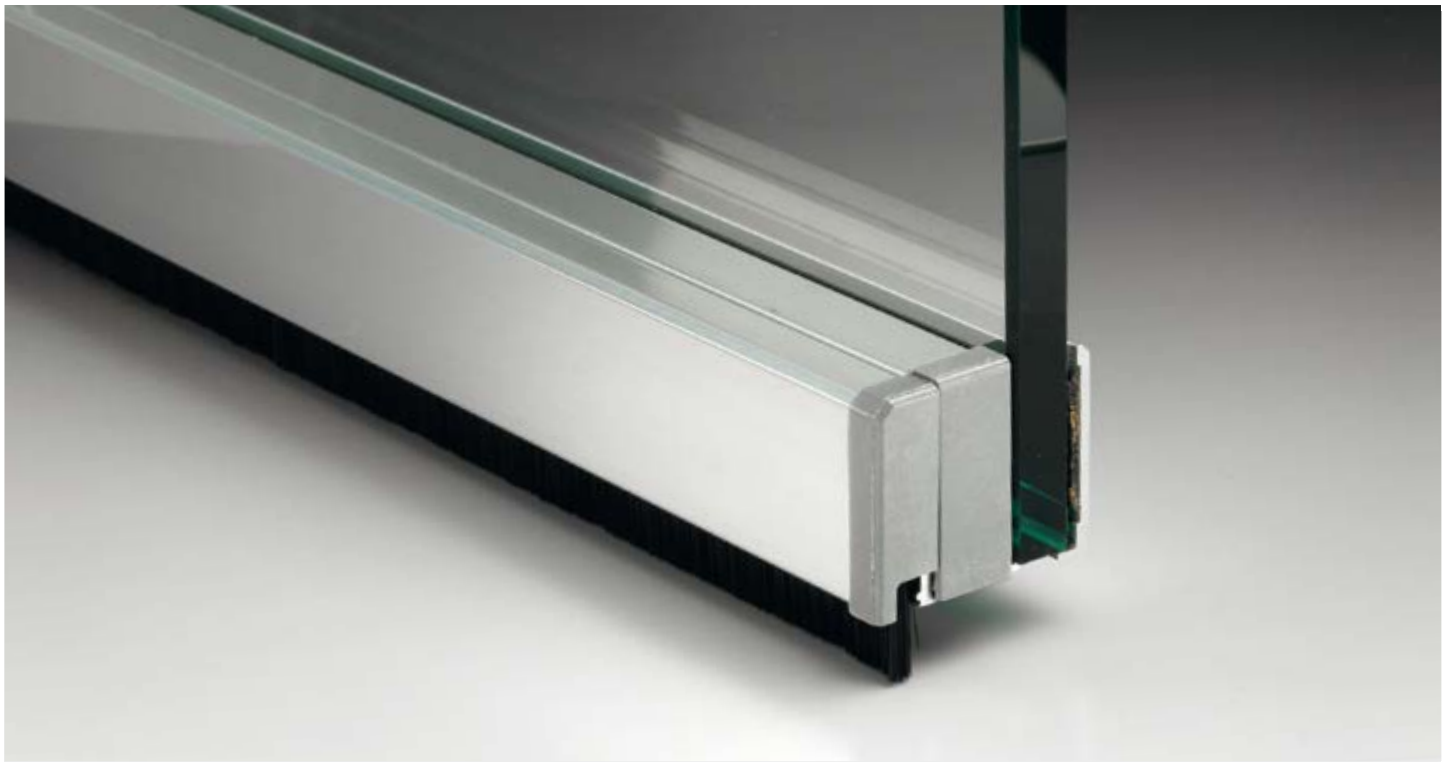

LOWER PROFILE WITH BRUSH GLASS 300 PIVOT

FOR PIVOTING AND SWING DOORS

ANODISED COATING 8/15 MICRON

Application: Closing gaps on the floor to ensure a seal that protects against wind, dust, insects, noise and and changes in temperature. Not waterproof

Description: An under door gasket that seals gaps between the glass door and floor. Can be installed on all traditional hinged systems, and on pivoting systems with floor-mounted door closer (using a suitable compensator for the hinge plate), adapting to the difference in height with a self-levelling spring system. The very fine bristles on the brush create a barrier that prevents dust and insects from entering, without hindering the opening of the door, even on rough floors. The under floor gasket is finished with stylish anodisation, side end caps and a rear cover that conceals the adhesive tape applied on the opposite side.

Properties: Attached using high strength two-sided tape.

Self-levelling spring movement. Aluminium alloy 6060 T6 profile. PA6 20% end caps.

FIXING TYPE: With high adhesion VHB two-sided tape for -40°C to +150°C

Finish: /97

PATENTED SYSTEM

CAN BE USED WITH GLASS FITTING SERIES

LOWER HINGE GF100

Art. GF100 _ Page 467

BOLT GL800

Art. GL800 _ Page 473

HANDLING AND CLEANING:

Wash with warm water and neutral detergent; use a soft cloth or a non-abrasive sponge.

Rinse thoroughly with clean water. Dry with a soft cloth.

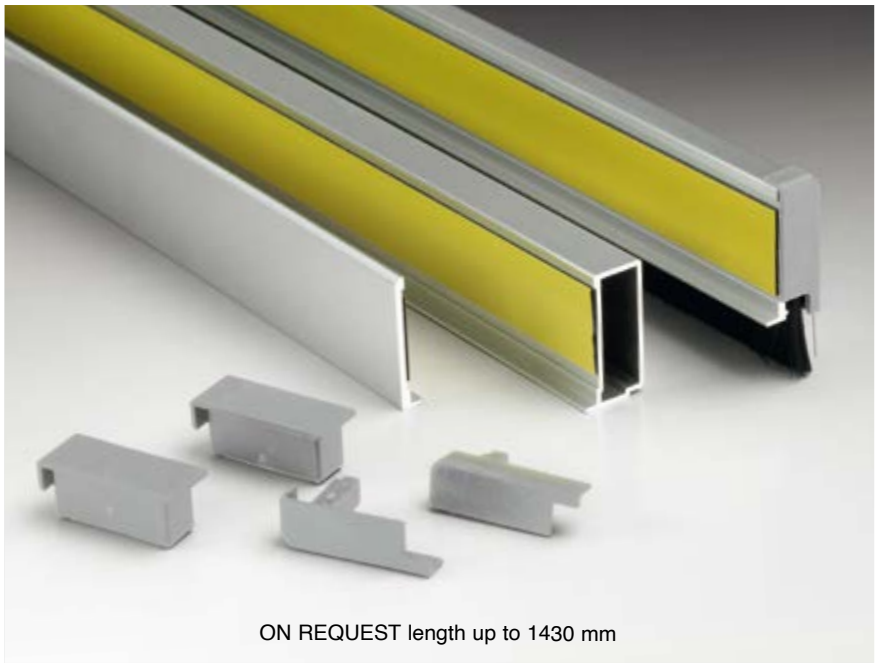

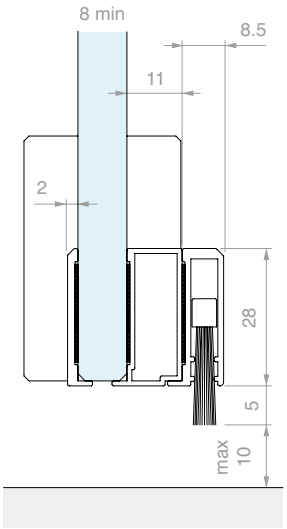

FOR PIVOTING DOORS

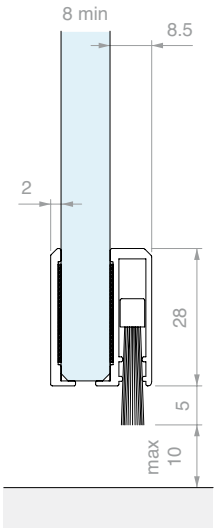

FOR INTERNAL USE

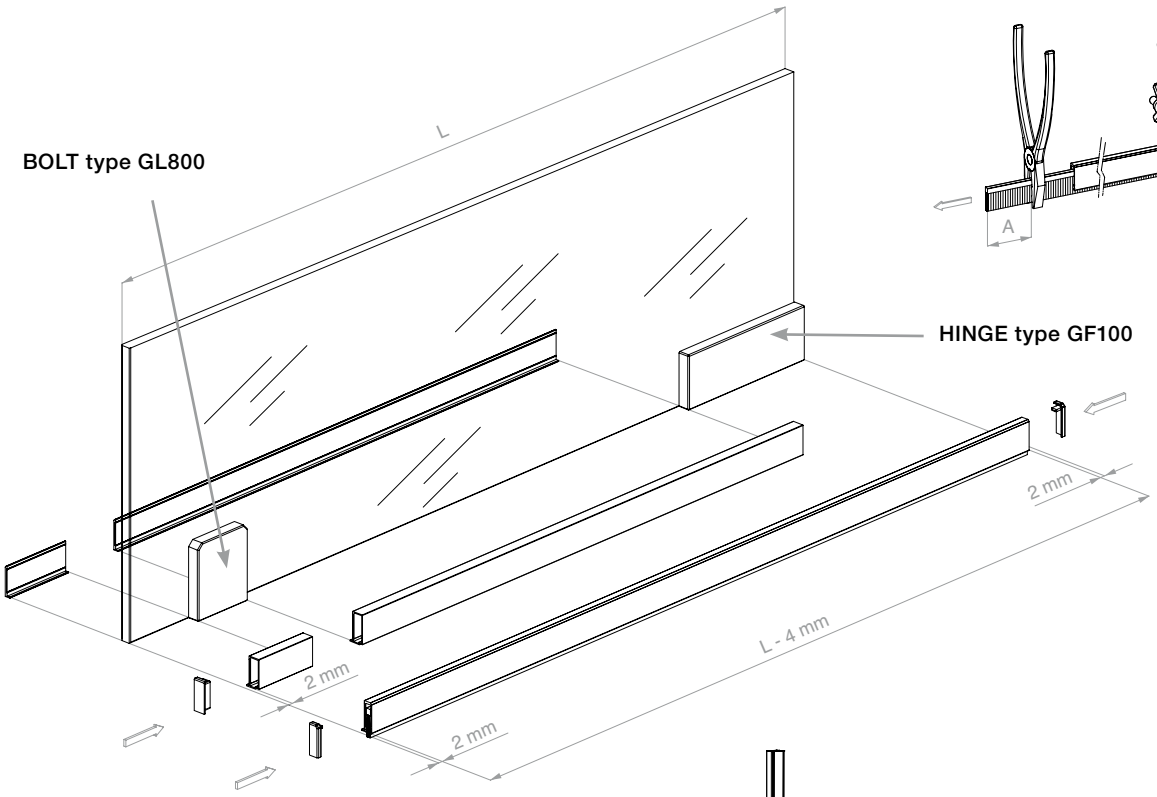

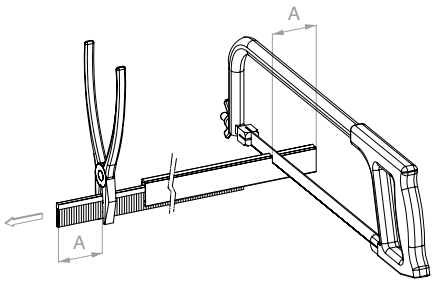

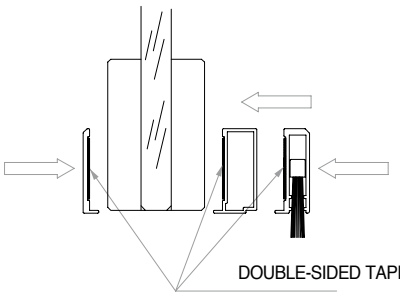

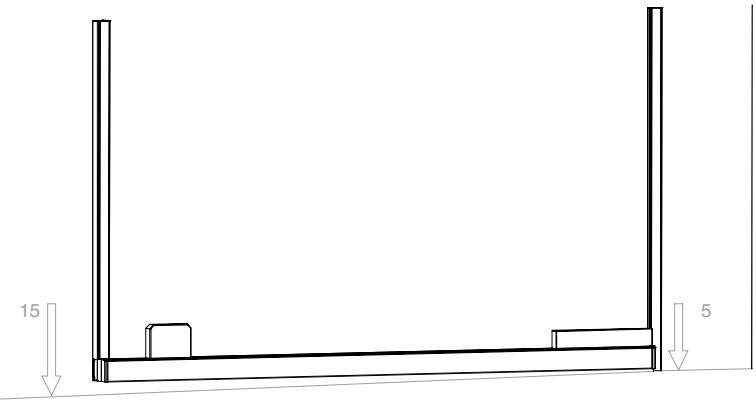

Art.	Length	Glass width	Qty
GSP03100	**1000** mm	max **1000** mm	1 Pc

HANDLES AND DOOR KNOBS

PANIC BAR
Page 565

PULL HANDLES WITH LOCK
Page 585

PULL HANDLES
Page 596

ADHESIVE HANDLES
Page 608

HANDLES
Page 615

DOOR KNOBS
Page 626

PHOTO SHOWS:
1 x MAPA 220 M/83
1 x MAPA 220/83

PANIC BAR

Only those systems which comply with standard EN 1125 may be installed for panic exits, which covers panic exit systems which are operated by horizontal bars (traditional PANIC BARS and touch bars). **Devices which are mainly fitted in places open to the public or with personnel who are not trained in emergency procedures: cinemas, theatres, buildings used for sporting activities, etc.**

Iseo Serrature has obtained certification of compliance with standard EN 1125 as per CPR 305/2011 from the Warrington Certification Limited (WCL) Institute.

CLASSIFICATION PRINTED ON THE PRODUCT TO IDENTIFY THE APPROPRIATE PROPERTIES FOR EACH APPLICATION

	Category of use	Durability	Door mass	Resistance to fire	Safety for people	Corrosion resistance	Security for property	Projection of the bar	Type of device operation
Not suitable for fire/smoke-proof doors	3	7	6	0	1	4	2	2	A
Suitable for fire/smoke-proof doors	3	7	6	1	1	4	2	2	A

Category of use. There is a single category which is identified for very frequent use of the bar by people who are not paying much attention and the possibility of incident or improper use may arise.
Durability. There are two categories:
grade 6 = 100,000 cycles
grade 7 = 200,000 cycles
Door mass. There are two categories:
grade 5 = up to 100 kg,
grade 6 = up to 200 kg.
Resistance to fire. There are two categories:
grade 0 = not suitable for fire/smoke-proof doors
grade 1 = suitable for fire/smoke-proof doors.
Safety for people. There is a single category which represents the highest achievable grade based on the fact that the panic devices must ensure the safety of people.

Corrosion resistance. There are two categories, in accordance with standard UNI EN1670: 2007
grade 3 = high resistance,
grade 4 = very high resistance.
Security for property. There is a single category which represents the lowest achievable grade based on the fact that the security of property must be considered to be secondary to the safety of people.
Projection of the bar. There are two categories:
grade 1 = projection of the bar up to 150 mm (normal)
grade 2 = projection of the bar up to 100 mm (low profile)
Type of device operation. There are 2 categories:
A = panic bar operated by a push bar
B = panic bar operated by a touch bar.

For more details, please refer to standard EN1125

The scope of application for PANIC BARS is defined by standard EN 1125, as set out below

Maximum door width	**1300 mm**
Maximum door height	**2500 mm**
Maximum door mass	**200 kg**
Operating temperature limits	**-20°C to + 100°C**

If the dimensions of the door are greater than the values indicated above, standard EN 1125 no longer applies and therefore the product certification is no longer valid. For doors with a mass of up to 200 kg, maximum height up to 3200 mm, and width up to 1500 mm, ISEO declares that the performance of the push bars are equal to those required by the standard.

Note:
The effective length of the bar (dimension X) must be as close as possible to the actual width (dimension Y) of the door for which it is recommended. In any case, it must never be less than 60% (see figure).
For the mass of the door, the limits of application remain the same as those specified by the standard.

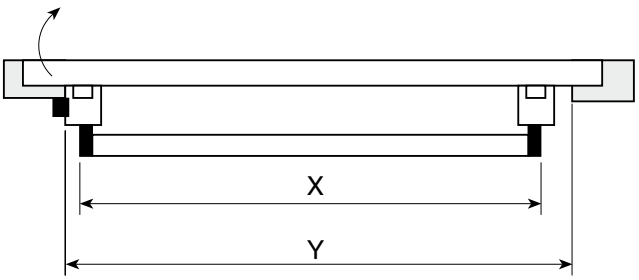

SINGLE DOOR PANIC BAR KIT WITHOUT EXTERNAL HANDLE

10/15

Material: Aluminium, Steel, Zamak

Finish: /56 /83

REVERSIBLE EXTERNAL OPENING

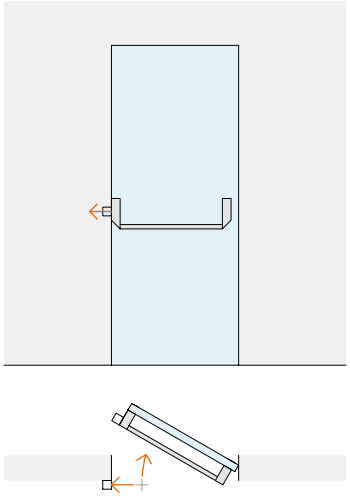

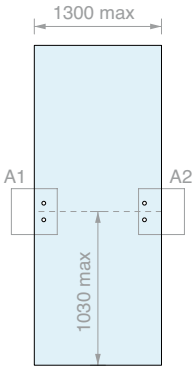

Kit comprising:

Art.	Description	Qty
MAP101	Latch/levers/cover	1 Pc
MAP103	Oval horizontal bar	1 Pc
MAP107	Pair of striker plates for push bars without control	1 Pc

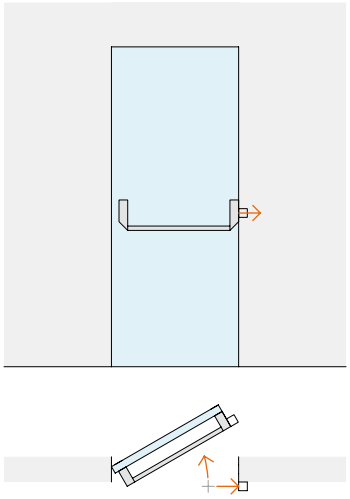

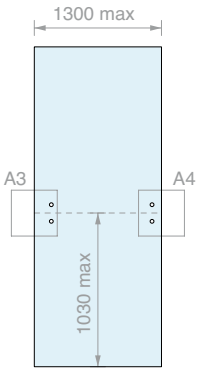

Art.	Q.ty
MAP-BASE	1 Pc

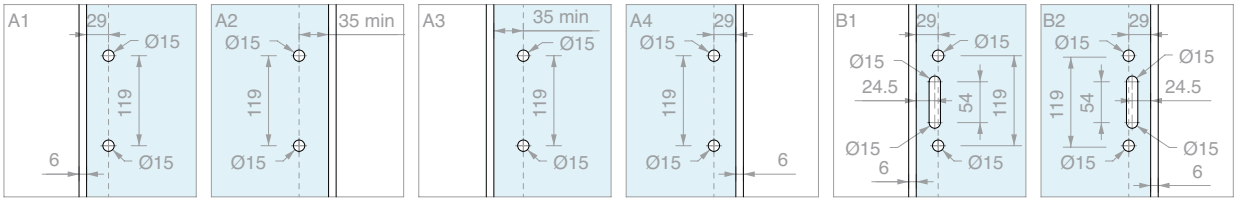

SINGLE DOOR PANIC BAR KIT WITH EXTERNAL HANDLE

10/15

Material: Aluminium, Steel, Zamak

Finish: /56 /83

RIGHT EXTERNAL OPENING

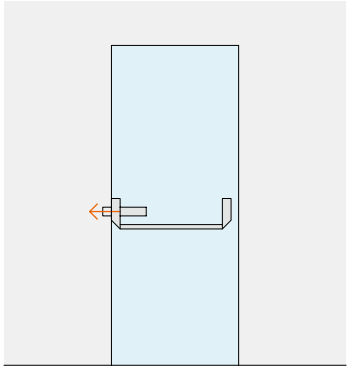

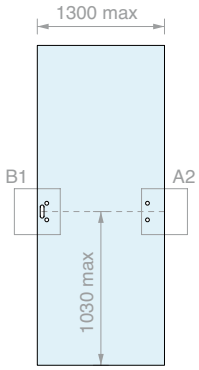

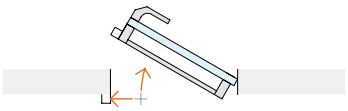

Kit comprising:

Art.	Description	Qty
MAP101	Latch/levers/cover	1 Pc
MAP103	Oval horizontal bar	1 Pc
MAP105	External handle	1 Pc
MAP111	Left external control	1 Pc

Art.	Version	Qty
MAP-BASEMSX	Left	1 Pc

LEFT EXTERNAL OPENING

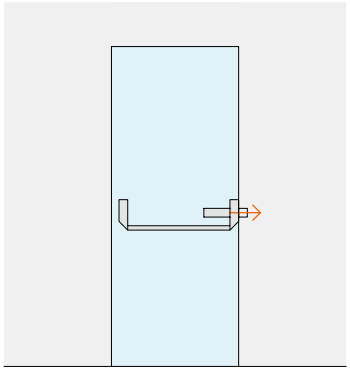

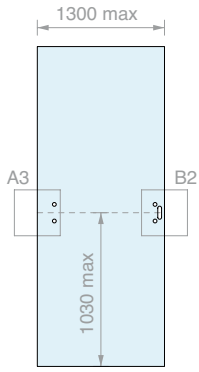

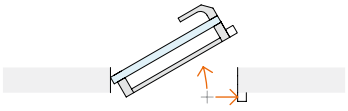

Kit comprising:

Art.	Description	Qty
MAP101	Latch/levers/cover	1 Pc
MAP103	Oval horizontal bar	1 Pc
MAP105	External handle	1 Pc
MAP109	Right external control	1 Pc

Art.	Version	Qty
MAP-BASEMDX	Right	1 Pc

SINGLE DOOR PANIC BAR KIT
WITHOUT EXTERNAL HANDLE WITH BOLT LATCHES

10/15

Material: Aluminium, Steel, Zamak

Finish: /56 /83

REVERSIBLE EXTERNAL OPENING

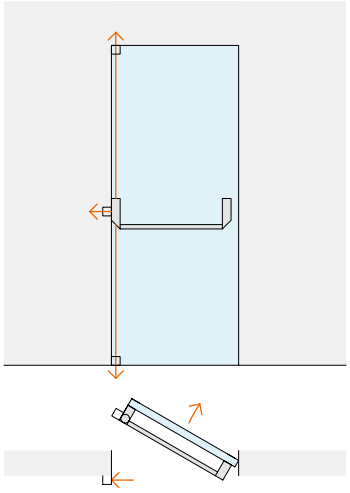

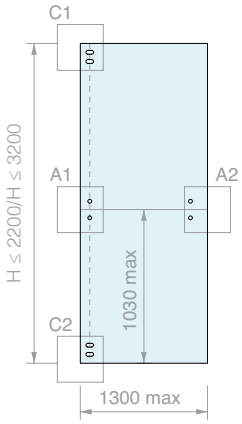

Kit comprising:

Art.	Description	Qty
MAP101-BOLT	Latch/levers/cover/latch bolt	1 Pc
MAP103	Oval horizontal bar	1 Pc
MAP107	Pair of striker plates for push bars without control	1 Pc
MAP113	Pair of Bolt latches - H 2200 mm	1 Pc
/		
MAP114	Pair of Bolt latches - H 3200 mm	
MAP115	Pair of Bolt strike plates - H 2200 mm	1 Pc
/		
MAP116	Pair of Bolt strike plates - H 3200 mm	

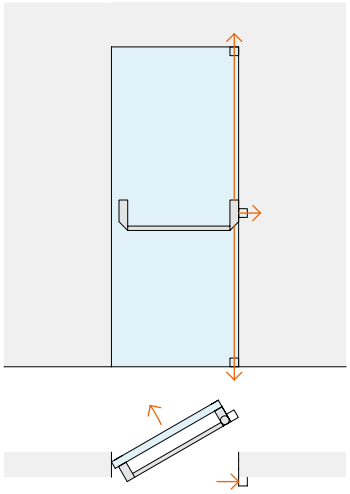

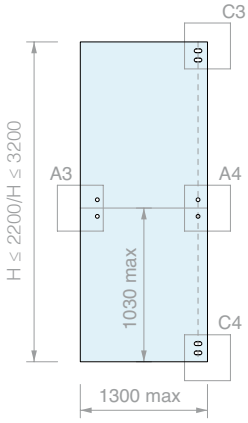

Art.	H max door	Qty
MAP-A220	**2200** mm	1 Pc
MAP-A320	**3200** mm	1 Pc

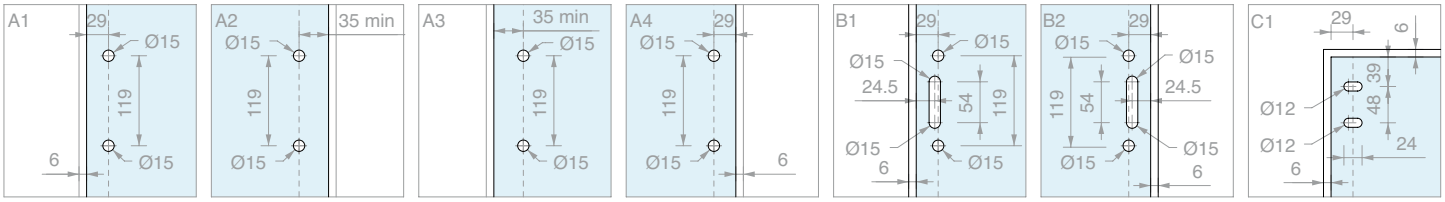

SINGLE DOOR PANIC BAR KIT
WITH EXTERNAL HANDLE AND BOLT LATCHES

10/15

Material: Aluminium, Steel, Zamak

Finish: /56 /83

LEFT EXTERNAL OPENING

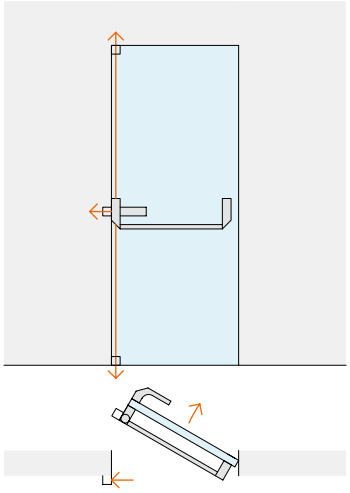

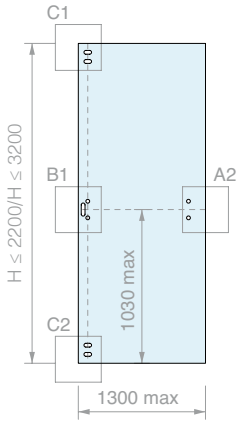

Kit comprising:

Art.	Description	Qty
MAP101-BOLT	Latch/levers/cover/latch bolt	1 Pc
MAP103	Oval horizontal bar	1 Pc
MAP113 / **MAP114**	Pair of Bolt latches - H 2200 mm Pair of Bolt latches - H 3200 mm	1 Pc
MAP115 / **MAP116**	Pair of Bolt strike plates - H 2200 mm Pair of Bolt strike plates - H 3200 mm	1 Pc
MAP105	External handle	1 Pc
MAP111	Left external control	1 Pc

Art.	H max door	Version	Qty
MAP-A220MSX	**2200** mm	Left	1 Pc
MAP-A320MSX	**3200** mm	Left	1 Pc

RIGHT EXTERNAL OPENING

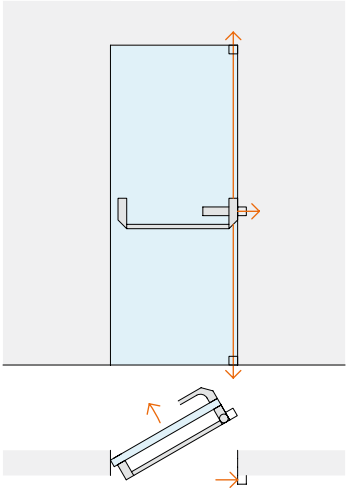

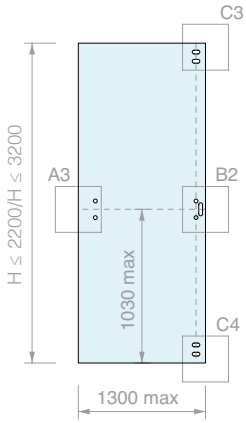

Kit comprising:

Art.	Description	Qty
MAP101-BOLT	Latch/levers/cover/latch bolt	1 Pc
MAP103	Oval horizontal bar	1 Pc
MAP113 / **MAP114**	Pair of Bolt latches - H 2200 mm Pair of Bolt latches - H 3200 mm	1 Pc
MAP115 / **MAP116**	Pair of Bolt strike plates - H 2200 mm Pair of Bolt strike plates - H 3200 mm	1 Pc
MAP105	External handle	1 Pc
MAP109	Right external control	1 Pc

Art.	H max door	Version	Qty
MAP-A220MDX	**2200** mm	Right	1 Pc
MAP-A320MDX	**3200** mm	Right	1 Pc

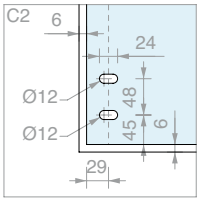

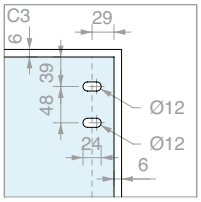

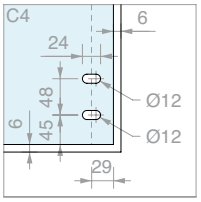

SINGLE DOOR PANIC BAR KIT
WITHOUT EXTERNAL HANDLE WITH BOLT LATCHES AND TRANSOM

10/15

Material: Aluminium, Steel, Zamak

Finish: /56 /83

REVERSIBLE EXTERNAL OPENING

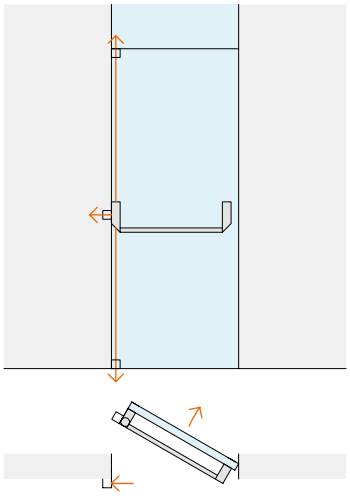

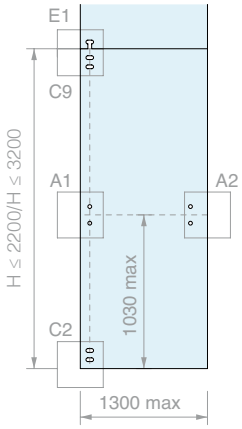

Kit comprising:

Art.	Description	Qty
MAP101-BOLT	Latch/levers/cover/latch bolt	1 Pc
MAP103	Oval horizontal bar	1 Pc
MAP107	Pair of striker plates for push bars without control	1 Pc
MAP113 / **MAP114**	Pair of Bolt latches - H 2200 mm Pair of Bolt latches - H 3200 mm	1 Pc
MAP115 / **MAP116**	Pair of Bolt strike plates - H 2200 mm Pair of Bolt strike plates - H 3200 mm	1 Pc
MAP119	Upper strike plate for Bolt latch	1 Pc

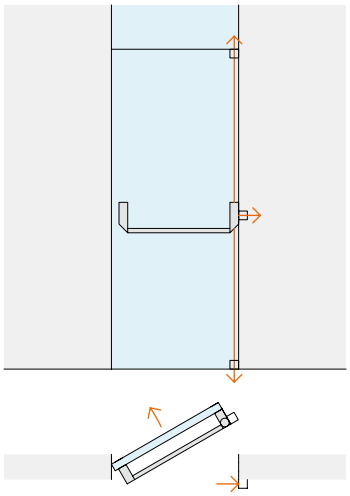

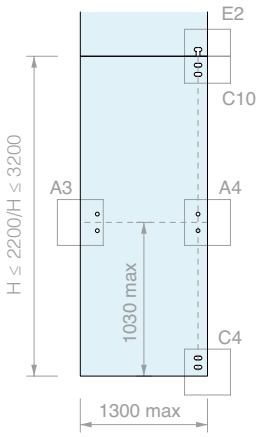

Art.	H max door	Qty
MAP-B220	**2200** mm	1 Pc
MAP-B320	**3200** mm	1 Pc

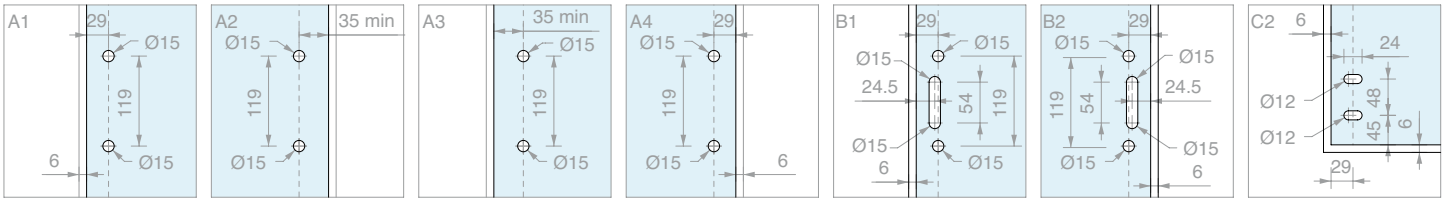

SINGLE DOOR PANIC BAR KIT
WITH EXTERNAL HANDLE, BOLT LATCHES AND TRANSOM

10/15

Material: Aluminium, Steel, Zamak

Finish: /56 /83

LEFT EXTERNAL OPENING

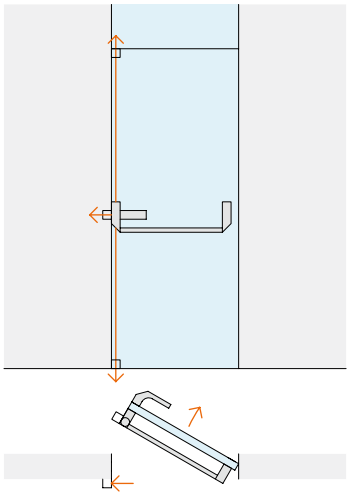

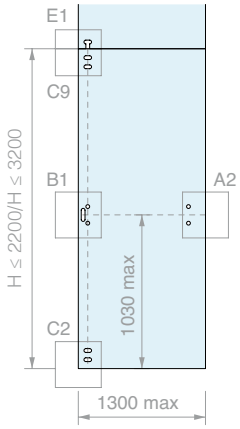

Kit comprising:

Art.	Description	Qty
MAP101-BOLT	Latch/levers/cover/latch bolt	1 Pc
MAP103	Oval horizontal bar	1 Pc
MAP113 / **MAP114**	Pair of Bolt latches - H 2200 mm Pair of Bolt latches - H 3200 mm	1 Pc
MAP115 / **MAP116**	Pair of Bolt strike plates - H 2200 mm Pair of Bolt strike plates - H 3200 mm	1 Pc
MAP119	Upper strike plate for Bolt latch	1 Pc
MAP105	External handle	1 Pc
MAP111	Left external control	1 Pc

Art.	H max door	Version	Qty
MAP-B220MSX	**2200** mm	Left	1 Pc
MAP-B320MSX	**3200** mm	Left	1 Pc

RIGHT EXTERNAL OPENING

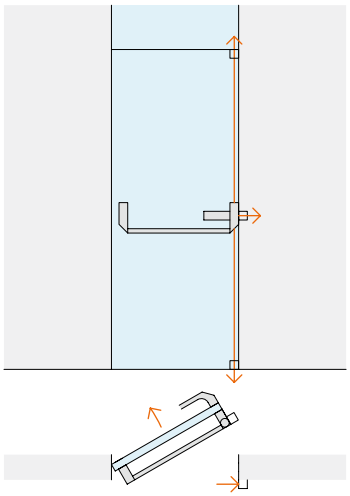

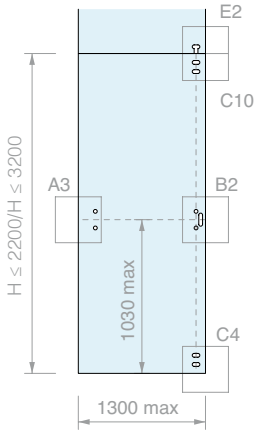

Kit comprising:

Art.	Description	Qty
MAP101-BOLT	Latch/lever/cover/latch bolt	1 Pc
MAP103	Oval horizontal bar	1 Pc
MAP113 / **MAP114**	Pair of Bolt latches - H 2200 mm Pair of Bolt latches - H 3200 mm	1 Pc
MAP115 / **MAP116**	Pair of Bolt strike plates - H 2200 mm Pair of Bolt strike plates - H 3200 mm	1 Pc
MAP119	Upper strike plate for Bolt latch	1 Pc
MAP105	External handle	1 Pc
MAP109	Right external control	1 Pc

Art.	H max door	Version	Qty
MAP-B220MDX	**2200** mm	Right	1 Pc
MAP-B320MDX	**3200** mm	Right	1 Pc

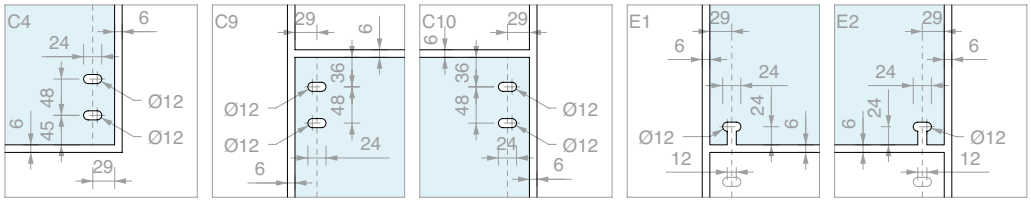

SINGLE DOOR PANIC BAR KIT
WITHOUT EXTERNAL HANDLE WITH BOLT LATCHES AND FIXED GLASS

10/15

Material: Aluminium, Steel, Zamak

Finish: /56 /83

REVERSIBLE EXTERNAL OPENING

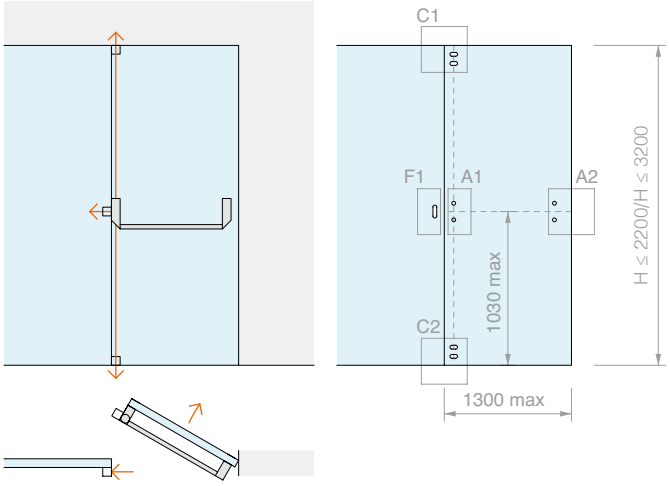

Kit comprising:

Art.	Description	Qty
MAP101-BOLT	Latch/levers/cover/latch bolt	1 Pc
MAP103	Oval horizontal bar	1 Pc
MAP107	Pair of striker plates for push bars without control	1 Pc
MAP113	Pair of Bolt latches - H 2200 mm	1 Pc
/ **MAP114**	Pair of Bolt latches - H 3200 mm	
MAP115	Pair of Bolt strike plates - H 2200 mm	1 Pc
/ **MAP116**	Pair of Bolt strike plates - H 3200 mm	
MAP117	Side strike plate for fixed glass	1 Pc

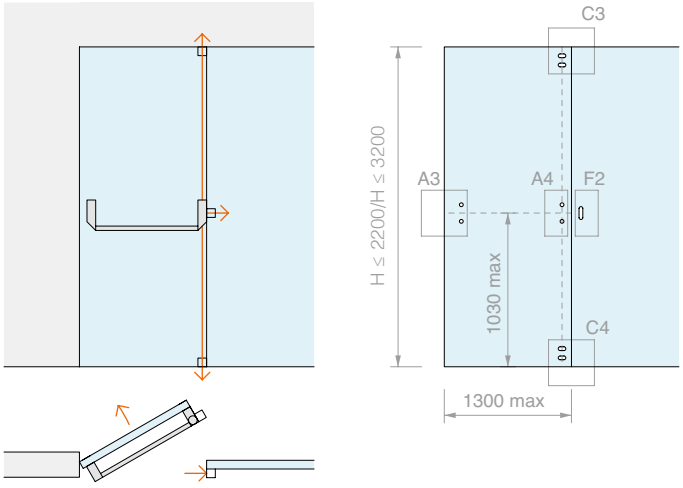

Art.	H max door	Qty
MAP-C220	**2200** mm	1 Pc
MAP-C320	**3200** mm	1 Pc

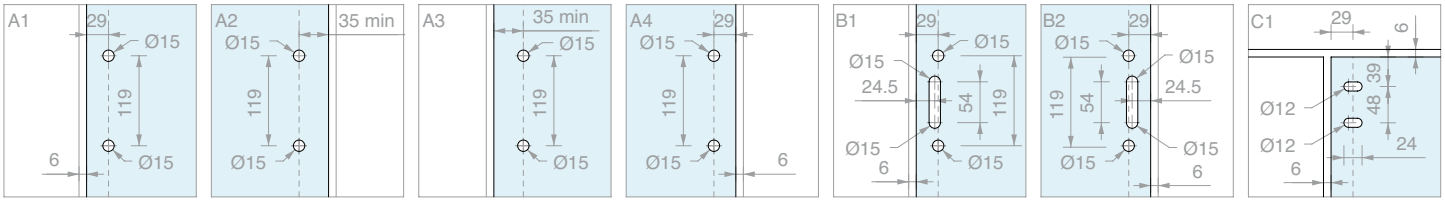

SINGLE DOOR PANIC BAR KIT
WITH EXTERNAL HANDLE, BOLT LATCHES AND FIXED GLASS

10/15

Material: Aluminium, Steel, Zamak

Finish: /56 /83

LEFT EXTERNAL OPENING

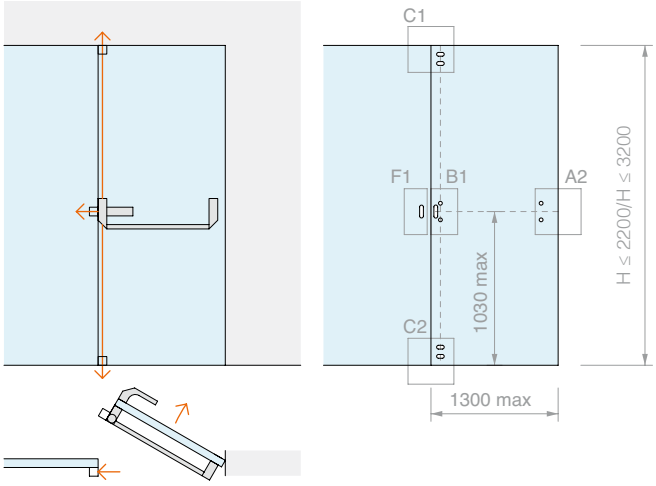

Kit comprising:

Art.	Description	Qty
MAP101-BOLT	Latch/levers/cover/latch bolt	1 Pc
MAP103	Oval horizontal bar	1 Pc
MAP117	Side strike plate for fixed glass	1 Pc
MAP113 / **MAP114**	Pair of Bolt latches - H 2200 mm Pair of Bolt latches - H 3200 mm	1 Pc
MAP115 / **MAP116**	Pair of Bolt strike plates - H 2200 mm Pair of Bolt strike plates - H 3200 mm	1 Pc
MAP105	External handle	1 Pc
MAP111	Left external control	1 Pc

Art.	H max door	Version	Qty
MAP-C220MSX	**2200** mm	Left	1 Pc
MAP-C320MSX	**3200** mm	Left	1 Pc

RIGHT EXTERNAL OPENING

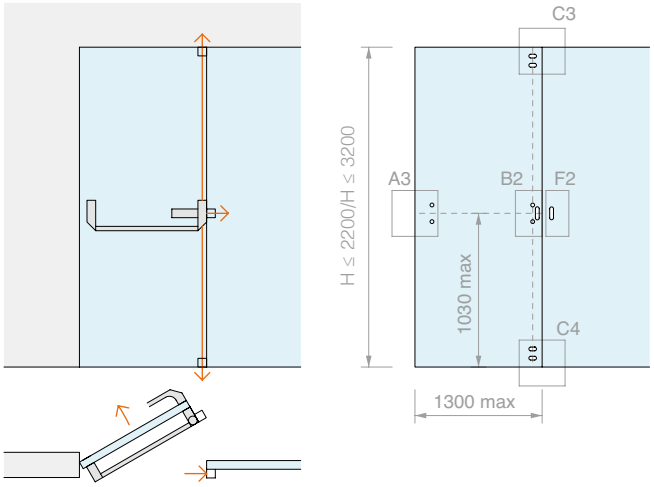

Kit comprising:

Art.	Description	Qty
MAP101-BOLT	Latch/levers/cover/latch bolt	1 Pc
MAP103	Oval horizontal bar	1 Pc
MAP117	Side strike plate for fixed glass	1 Pc
MAP113 / **MAP114**	Pair of Bolt latches - H 2200 mm Pair of Bolt latches - H 3200 mm	1 Pc
MAP115 / **MAP116**	Pair of Bolt strike plates - H 2200 mm Pair of Bolt strike plates - H 3200 mm	1 Pc
MAP105	External handle	1 Pc
MAP109	Right external control	1 Pc

Art.	H max door	Version	Qty
MAP-C220MDX	**2200** mm	Right	1 Pc
MAP-C320MDX	**3200** mm	Right	1 Pc

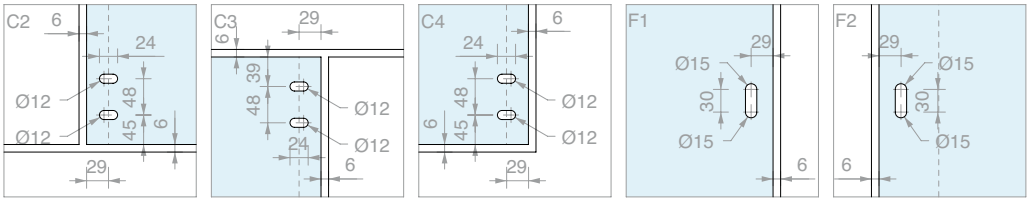

SINGLE DOOR PANIC BAR KIT
WITHOUT EXTERNAL HANDLE, WITH BOLT LATCHES, TRANSOM AND FIXED GLASS

10/15

Material: Aluminium, Steel, Zamak

Finish: /56 /83

REVERSIBLE EXTERNAL OPENING

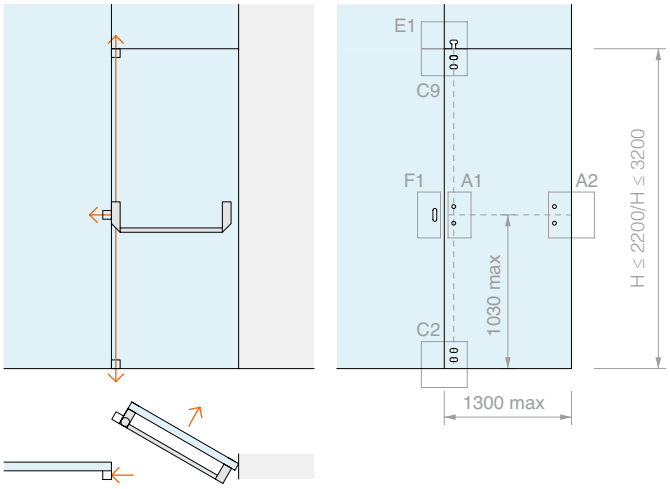

Kit comprising:

Art.	Description	Qty
MAP101-BOLT	Latch/levers/cover/latch bolt	1 Pc
MAP103	Oval horizontal bar	1 Pc
MAP107	Pair of striker plates for push bars without control	1 Pc
MAP113	Pair of Bolt latches - H 2200 mm	1 Pc
/ **MAP114**	Pair of Bolt latches - H 3200 mm	
MAP115	Pair of Bolt strike plates - H 2200 mm	1 Pc
/ **MAP116**	Pair of Bolt strike plates - H 3200 mm	
MAP117	Side strike plate for fixed glass	1 Pc
MAP119	Upper strike plate for Bolt latch	1 Pc

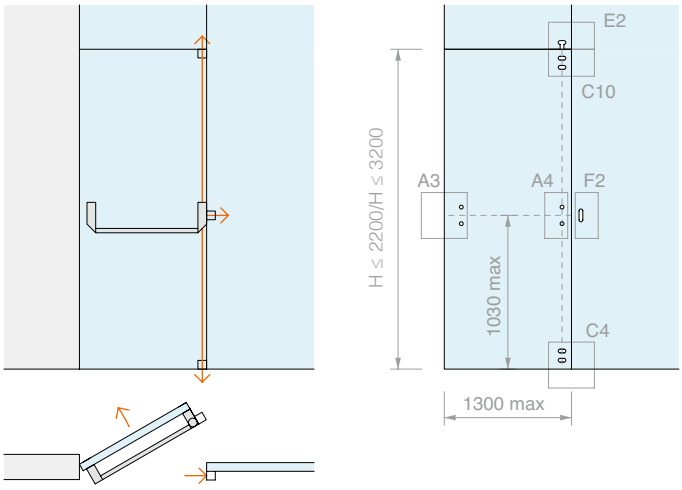

Art.	H max door	Qty
MAP-E220	**2200** mm	1 Pc
MAP-E320	**3200** mm	1 Pc

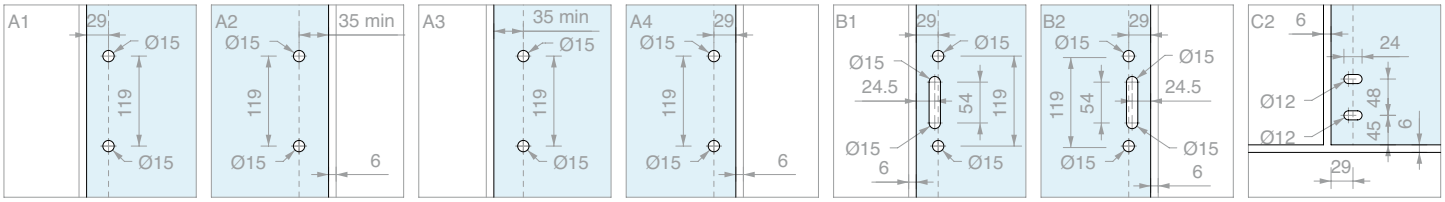

SINGLE DOOR PANIC BAR KIT
WITH EXTERNAL HANDLE, BOLT LATCHES, TRANSOM AND FIXED GLASS

10/15

Material: Aluminium, Steel, Zamak

Finish: /56 /83

LEFT EXTERNAL OPENING

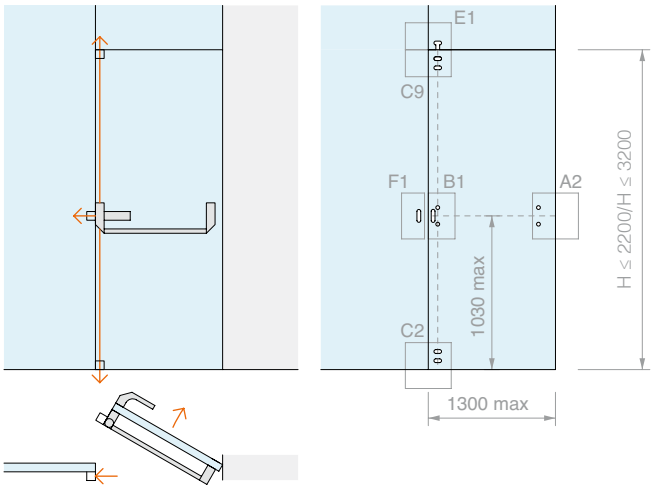

Kit comprising:

Art.	Description	Qty
MAP101-BOLT	Latch/levers/cover/latch bolt	1 Pc
MAP103	Oval horizontal bar	1 Pc
MAP117	Side strike plate for fixed glass	1 Pc
MAP113 / **MAP114**	Pair of Bolt latches - H 2200 mm Pair of Bolt latches - H 3200 mm	1 Pc
MAP115 / **MAP116**	Pair of Bolt strike plates - H 2200 mm Pair of Bolt strike plates - H 3200 mm	1 Pc
MAP119	Upper strike plate for Bolt latch	1 Pc
MAP105	External handle	1 Pc
MAP111	Left external control	1 Pc

Art.	H max door	Version	Qty
MAP-E220MSX	**2200** mm	Left	1 Pc
MAP-E320MSX	**3200** mm	Left	1 Pc

RIGHT EXTERNAL OPENING

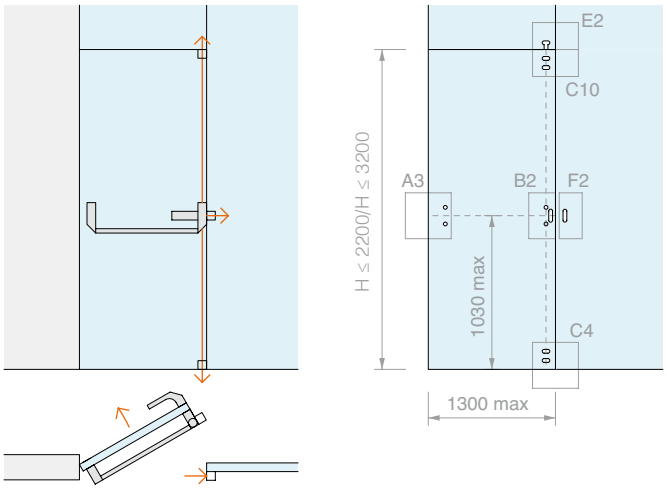

Kit comprising:

Art.	Description	Qty
MAP101-BOLT	Latch/levers/cover/latch bolt	1 Pc
MAP103	Oval horizontal bar	1 Pc
MAP117	Side strike plate for fixed glass	1 Pc
MAP113 / **MAP114**	Pair of Bolt latches - H 2200 mm Pair of Bolt latches - H 3200 mm	1 Pc
MAP115 / **MAP116**	Pair of Bolt strike plates - H 2200 mm Pair of Bolt strike plates - H 3200 mm	1 Pc
MAP119	Upper strike plate for Bolt latch	1 Pc
MAP105	External handle	1 Pc
MAP109	Right external control	1 Pc

Art.	H max door	Version	Qty
MAP-E220MDX	**2200** mm	Right	1 Pc
MAP-E320MDX	**3200** mm	Right	1 Pc

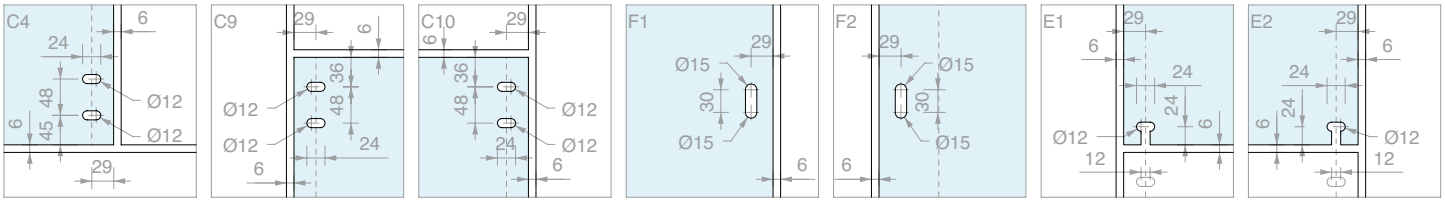

DOUBLE DOOR PANIC BAR KIT
BOLT LATCHES ON ONE DOOR, WITHOUT EXTERNAL HANDLE

10/15

Material: Aluminium, Steel, Zamak

Finish: /56 /83

REVERSIBLE EXTERNAL OPENING

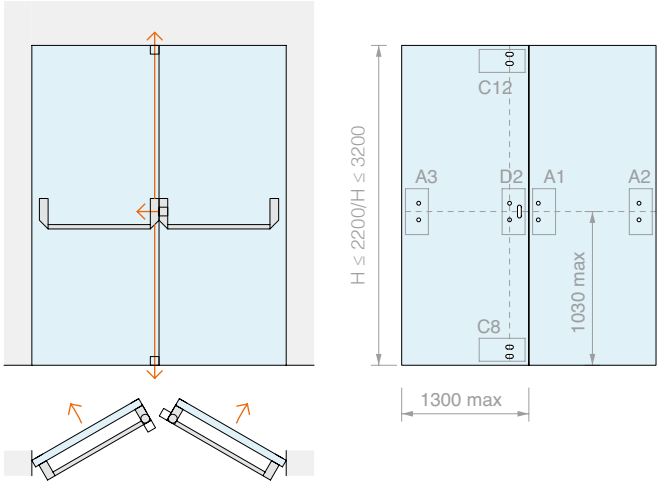

Kit comprising:

Art.	Description	Qty
MAP101-BOLT	Latch/levers/cover/latch bolt	1 Pc
MAP101	Latch/levers/cover	1 Pc
MAP103	Oval horizontal bar	2 Pcs
MAP107	Pair of striker plates for push bars without control	2 Pcs
MAP113 / **MAP114**	Pair of Bolt latches - H 2200 mm Pair of Bolt latches - H 3200 mm	1 Pc
MAP115 / **MAP116**	Pair of Bolt strike plates - H 2200 mm Pair of Bolt strike plates - H 3200 mm	1 Pc
MAP117	Side strike plate for fixed glass	1 Pc

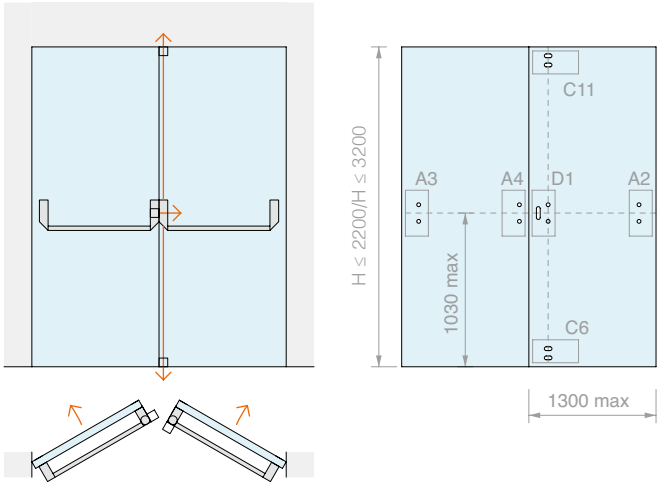

Art.	H max door	Qty
MAP-F220	**2200** mm	1 Pc
MAP-F320	**3200** mm	1 Pc

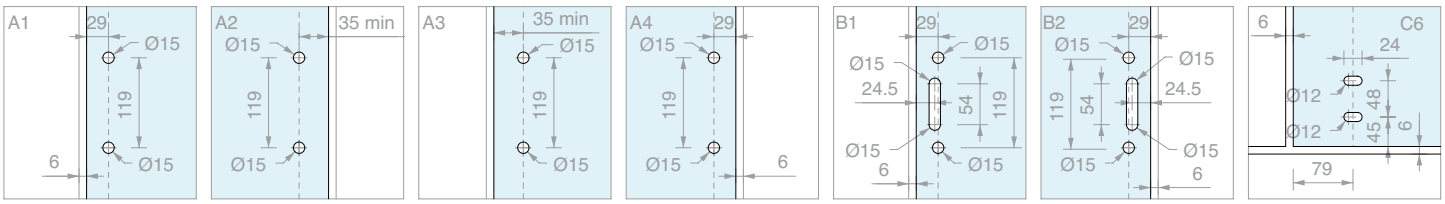

DOUBLE DOOR PANIC BAR KIT
BOLT LATCHES ON ONE DOOR AND EXTERNAL HANDLE

10/15

Material: Aluminium, Steel, Zamak

Finish: /56 /83

LEFT EXTERNAL OPENING

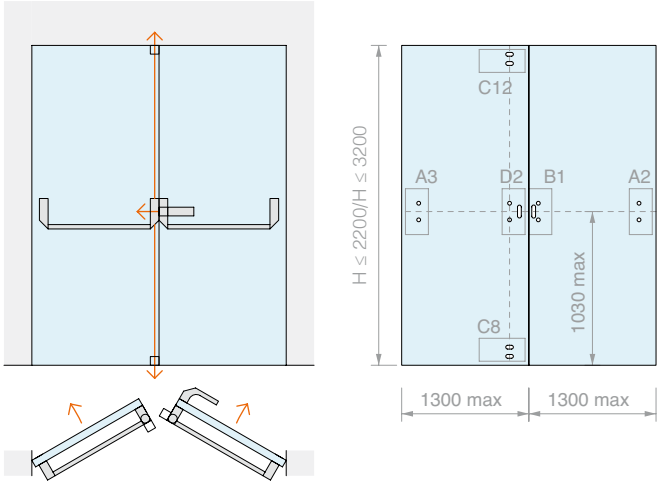

Kit comprising:

Art.	Description	Qty
MAP101-BOLT	Latch/levers/cover/latch bolt	1 Pc
MAP101	Latch/levers/cover	1 Pc
MAP103	Oval horizontal bar	2 Pcs
MAP107	Pair of striker plates for push bars without control	1 Pc
MAP113 / **MAP114**	Pair of Bolt latches - H 2200 mm Pair of Bolt latches - H 3200 mm	1 Pc
MAP115 / **MAP116**	Pair of Bolt strike plates - H 2200 mm Pair of Bolt strike plates - H 3200 mm	1 Pc
MAP117	Side strike plate for fixed glass	1 Pc
MAP105	External handle	1 Pc
MAP111	Left external control	1 Pc

Art.	H max door	Version	Qty
MAP-F220MSX	**2200** mm	Left	1 Pc
MAP-F320MSX	**3200** mm	Left	1 Pc

RIGHT EXTERNAL OPENING

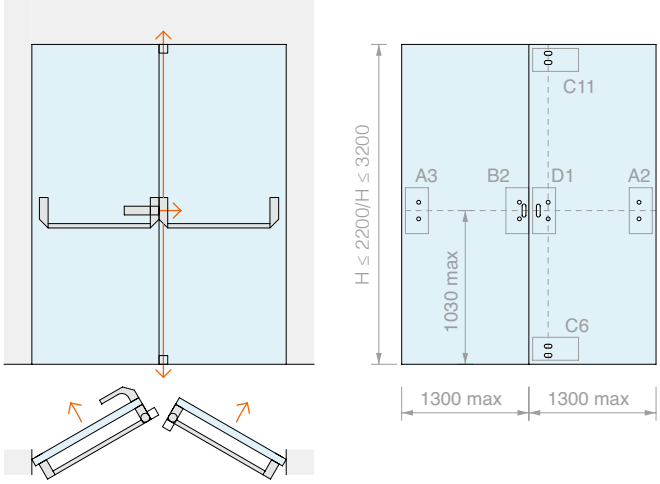

Kit comprising:

Art.	Description	Qty
MAP101-BOLT	Latch/levers/cover/latch bolt	1 Pc
MAP101	Latch/levers/cover	1 Pc
MAP103	Oval horizontal bar	2 Pcs
MAP107	Pair of striker plates for push bars without control	1 Pc
MAP113 / **MAP114**	Pair of Bolt latches - H 2200 mm Pair of Bolt latches - H 3200 mm	1 Pc
MAP115 / **MAP116**	Pair of Bolt strike plates - H 2200 mm Pair of Bolt strike plates - H 3200 mm	1 Pc
MAP117	Side strike plate for fixed glass	1 Pc
MAP105	External handle	1 Pc
MAP109	Right external control	1 Pc

Art.	H max door	Version	Qty
MAP-F220MDX	**2200** mm	Right	1 Pc
MAP-F320MDX	**3200** mm	Right	1 Pc

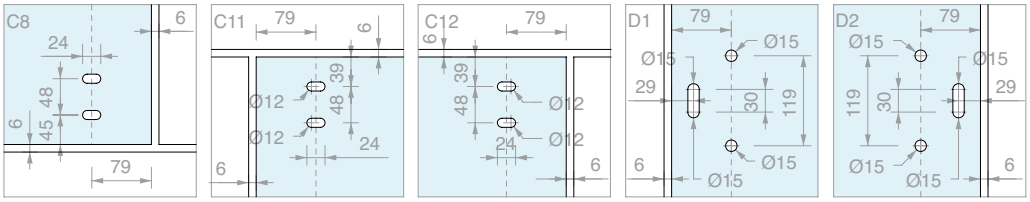

DOUBLE DOOR PANIC BAR KIT
BOLT LATCHES ON ONE DOOR AND TRANSOM, WITHOUT EXTERNAL HANDLE

10/15

Material: Aluminium, Steel, Zamak

Finish: /56 /83

REVERSIBLE EXTERNAL OPENING

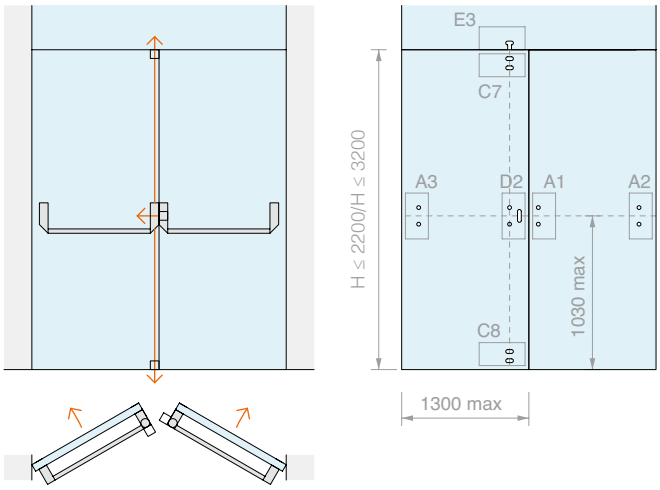

Kit comprising:

Art.	Description	Qty
MAP101-BOLT	Latch/levers/cover/latch bolt	1 Pc
MAP101	Latch/levers/cover	1 Pc
MAP103	Oval horizontal bar	2 Pcs
MAP107	Pair of striker plates for push bars without control	2 Pcs
MAP113 / **MAP114**	Pair of Bolt latches - H 2200 mm Pair of Bolt latches - H 3200 mm	1 Pc
MAP115 / **MAP116**	Pair of Bolt strike plates - H 2200 mm Pair of Bolt strike plates - H 3200 mm	1 Pc
MAP117	Side strike plate for fixed glass	1 Pc
MAP119	Upper strike plate for Bolt latch	1 Pc

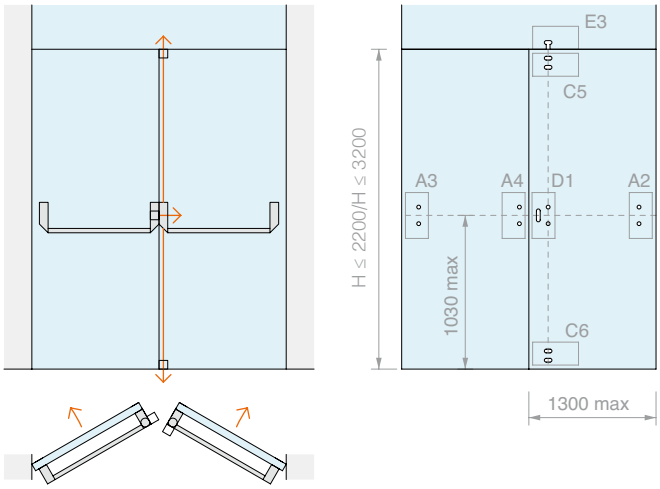

Art.	H max door	Qty
MAP-G220	**2200** mm	1 Pc
MAP-G320	**3200** mm	1 Pc

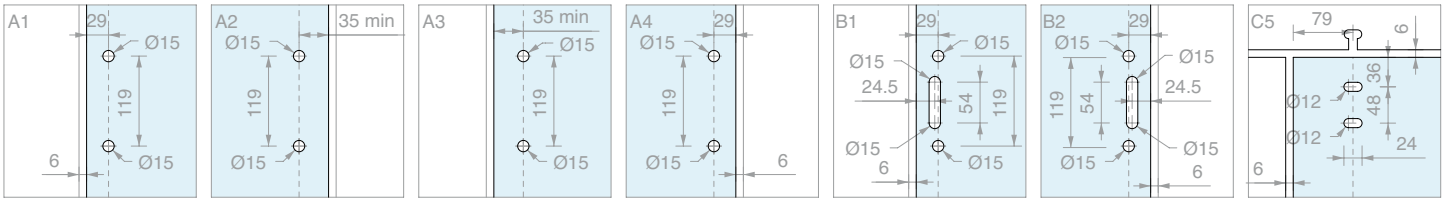

DOUBLE DOOR PANIC BAR KIT
BOLT LATCHES ON ONE DOOR, TRANSOM AND EXTERNAL HANDLE

10/15

Material: Aluminium, Steel, Zamak

Finish: /56 /83

LEFT EXTERNAL OPENING

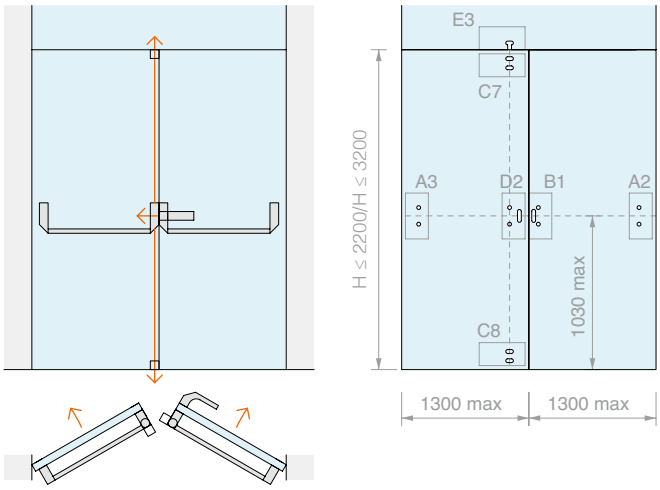

Kit comprising:

Art.	Description	Qty
MAP101-BOLT	Latch/levers/cover/latch bolt	1 Pc
MAP101	Latch/levers/cover	1 Pc
MAP103	Oval horizontal bar	2 Pcs
MAP107	Pair of striker plates for push bars without control	1 Pc
MAP113 / **MAP114**	Pair of Bolt latches - H 2200 mm Pair of Bolt latches - H 3200 mm	1 Pc
MAP115 / **MAP116**	Pair of Bolt strike plates - H 2200 mm Pair of Bolt strike plates - H 3200 mm	1 Pc
MAP117	Side strike plate for fixed glass	1 Pc
MAP119	Upper strike plate for Bolt latch	1 Pc
MAP105	External handle	1 Pc
MAP111	Left external control	1 Pc

Art.	H max door	Version	Qty
MAP-G220MSX	**2200** mm	Left	1 Pc
MAP-G320MSX	**3200** mm	Left	1 Pc

RIGHT EXTERNAL OPENING

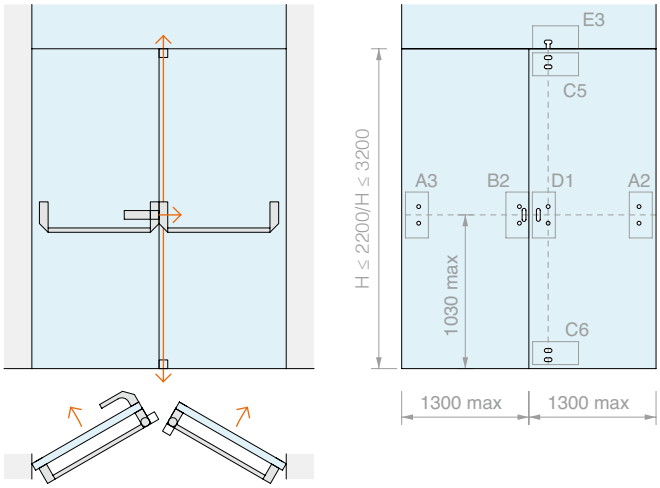

Kit comprising:

Art.	Description	Qty
MAP101-BOLT	Latch/levers/cover/latch bolt	1 Pc
MAP101	Latch/levers/cover	1 Pc
MAP103	Oval horizontal bar	2 Pcs
MAP107	Pair of striker plates for push bars without control	1 Pc
MAP113 / **MAP114**	Pair of Bolt latches - H 2200 mm Pair of Bolt latches - H 3200 mm	1 Pc
MAP115 / **MAP116**	Pair of Bolt strike plates - H 2200 mm Pair of Bolt strike plates - H 3200 mm	1 Pc
MAP117	Side strike plate for fixed glass	1 Pc
MAP119	Upper strike plate for Bolt latch	1 Pc
MAP105	External handle	1 Pc
MAP109	Right external control	1 Pc

Art.	H max door	Version	Qty
MAP-G220MDX	**2200** mm	Right	1 Pc
MAP-G320MDX	**3200** mm	Right	1 Pc

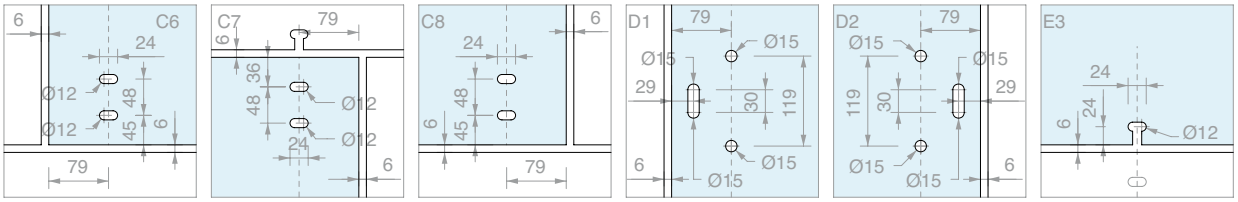

PANIC BAR
FOR FIXED GLASS FROM 8 TO 13.5 mm

Material: AISI 304 stainless steel internal mechanism and cover in aluminium with PVD treatment - Finish: /83
Galvanised steel internal mechanism and painted aluminium cover - Finish: /56

Panic bar featuring materials and technical solutions that ensure compliance with the most severe requirements of standards, including CE marking as per CPR 305/2011; and voluntary product certification issued by third party ICIM specified by standard UNI EN 1125. Version supplied with self-locking side latch with exclusion option.

The bar can be combined with a pair of UP/DOWN latches with BOLT-type tips - Art. MAP113/MAP114

Stainless steel bar, can be shortened as shown in the instructions supplied with the Kit.

Thickness of the glass with screws included 10/15 mm.

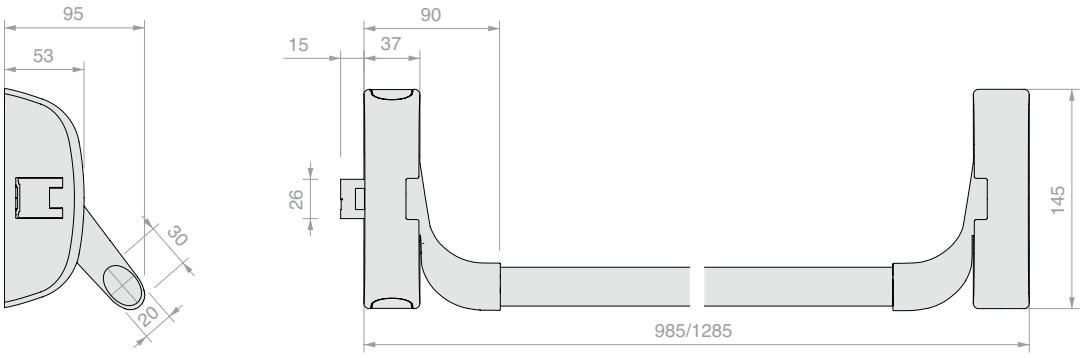

Art.	Description	Dimensions	Qty
MAP101	Side latch + Levers + Cover	L max **1285** x H **145** x P **95** mm	1 Pc
MAP101-BOLT	Side latch + Levers + Cover + Accessories for latch	L max **1285** x H **145** x P **95** mm	1 Pc
MAP103	Oval horizontal bar	L max **1130** mm	1 Pc

EXTERNAL HANDLE

Material: Galvanised steel internal mechanism and cover in aluminium with PVD treatment
Finish: /83
Material: Galvanised steel internal mechanism and painted aluminium cover
Finish: /56

For use with Art. MAP109/MAP111 according to the direction of opening

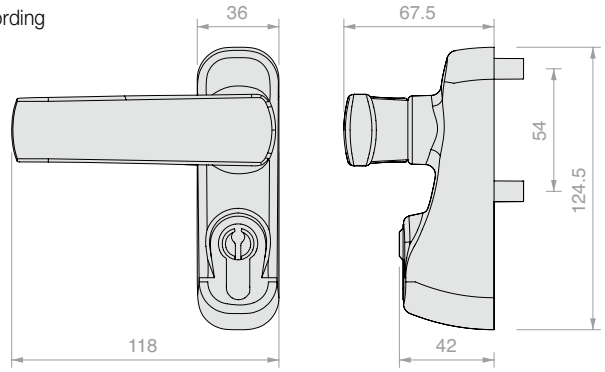

Art.	Qty
MAP105	1 Pc

GLASS KIT FOR PANIC BARS WITH EXTERNAL CONTROL

Material: Zamak
Kit for fitting the panic bar (Art. MAP101 and MAP101-BOLT) on panes of glass with external control (handle) for right external opening (Art. MAP109) and left external opening (Art. MAP111).
Finish: /83

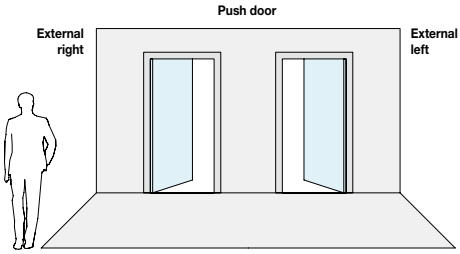

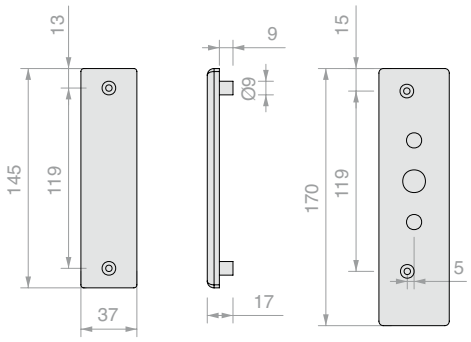

Art.	Opening	Qty
MAP109	External right	1 Pc
MAP111	External left	1 Pc

GLASS KIT FOR PANIC BARS WITHOUT EXTERNAL CONTROL

Material: Zamak
Installation kit for panic bar (Art. MAP101 and MAP101-BOLT) on panes of glass without external control (handle).
Finish: /83

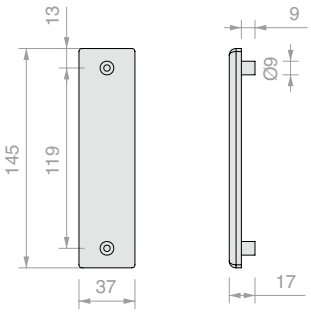

Art.	Qty
MAP107	1 Pc

ELECTRICAL WALL STRIKE PLATE

Material: Galvanised steel internal mechanism and cover in aluminium with PVD treatment
Finish: /83
Material: Galvanised steel internal mechanism and painted aluminium cover
Finish: /56

Electric wall strike plate (not compatible with glass/glass systems)
Electric latch = 10 mm from wall
Art. MAP123 provides the electric strike plate in grey only;
for the PVD PAINTED STEEL finish, order separately Art. MAP125

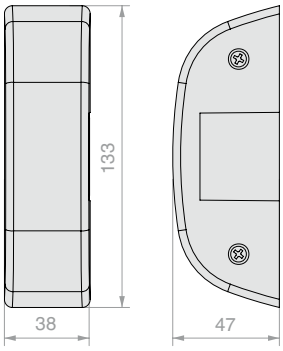

Art.	Description	Qty
MAP123	Electric wall strike plate	1 Pc
MAP125	Brushed steel PVD finish cover for electric strike plate	1 Pc

PAIR OF LATCHES FOR BOLT LOCK

Material: aluminium cover
Latches for BOLT up/down lock, for use with panic bar (Art. MAP101-BOLT). The BOLT system (patented) is very highly resistant to external attacks: it is tamper-resistant (the rods are self-locking and the tips, 14 mm in diameter, rotate and are cut-resistant) and it is very highly resistant to being forced.
Finish: /56 /83

Security and ease to install.
The pins are independent, self-locking, adjustable and resistant to being forced.

Self-closing system.
When open, the rods are retracted. On closing, they lock on contact with the plate.

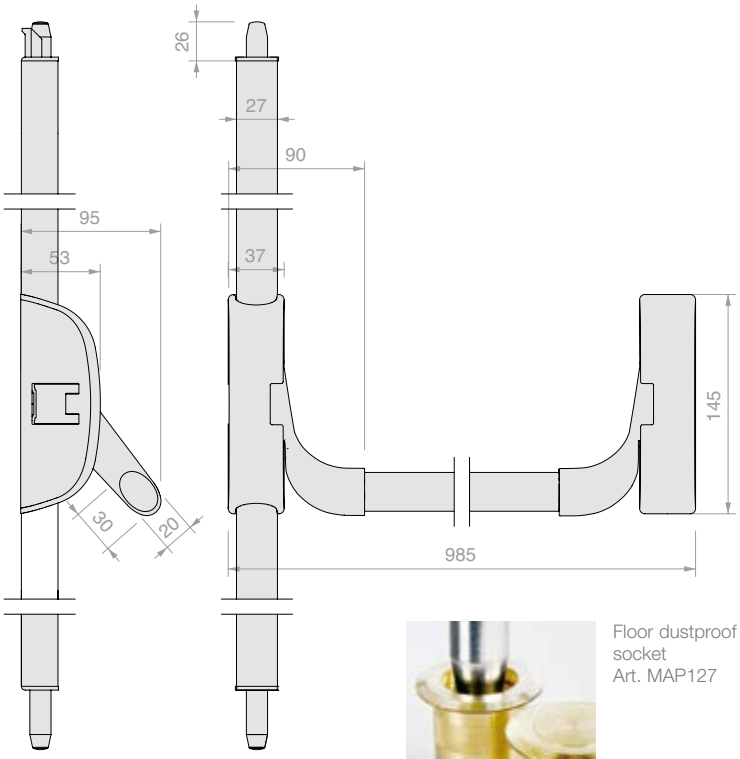

Floor dustproof socket
Art. MAP127

Art.	Description	Dimensions	Qty
MAP113	Pair of latches	Up to H **2200** mm	1 Pc
MAP114	Pair of latches	From H **2200** to H **3200** mm	1 Pc
MAP127	Floor dustproof socket		1 Pc

GLASS KIT FOR ADDITIONAL “BOLT” LOCKS

Material: Zamak

Kit for fitting the additional

BOLT locks (Art. MAP113/MAP114)

Finish: /83

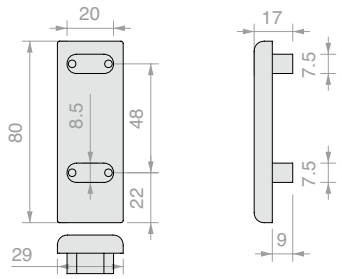

Art.	Dimensions	Qty
MAP115	H **2200** mm	1 Pc
MAP116	H **3200** mm	1 Pc

GLASS KIT FOR SIDE PLATE

Material: Zamak

Kit for panic bar side lock strike plate

(Art. MAP101 and MAP101-BOLT)

Finish: /83

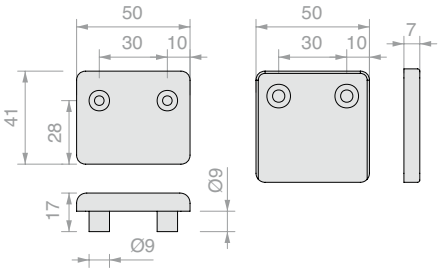

Art.	Qty
MAP117	1 Pc

GLASS KIT FOR UPPER ADJUSTABLE BOLT PLATE

Material: Zamak

Accessory for transom, allows the self-closing system to lock on contact with the rods (Art. MAP113 and MAP114)

Finish: /83

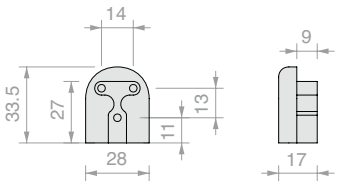

Art.	Qty
MAP119	1 Pc

KIT FOR DOGGING DEVICE FUNCTION

To be inserted into the panic bar support (Art. MAP101 and MAP101-BOLT) to inhibit the latch and use the door freely.

Finish: /95

Art.	Qty
MAP121	1 Pc

PULL HANDLES WITH CONCEALED LOCK

Material: AISI 304 stainless steel

Pull handle with a lock at the top of the bar which is locked by pressing the cylinder with the key inserted. Supplied with external lock. If an internal lock is required, specify at the time of ordering.

Pin Ø8 x 15 mm.

Finish: /8 /15*

*on demand

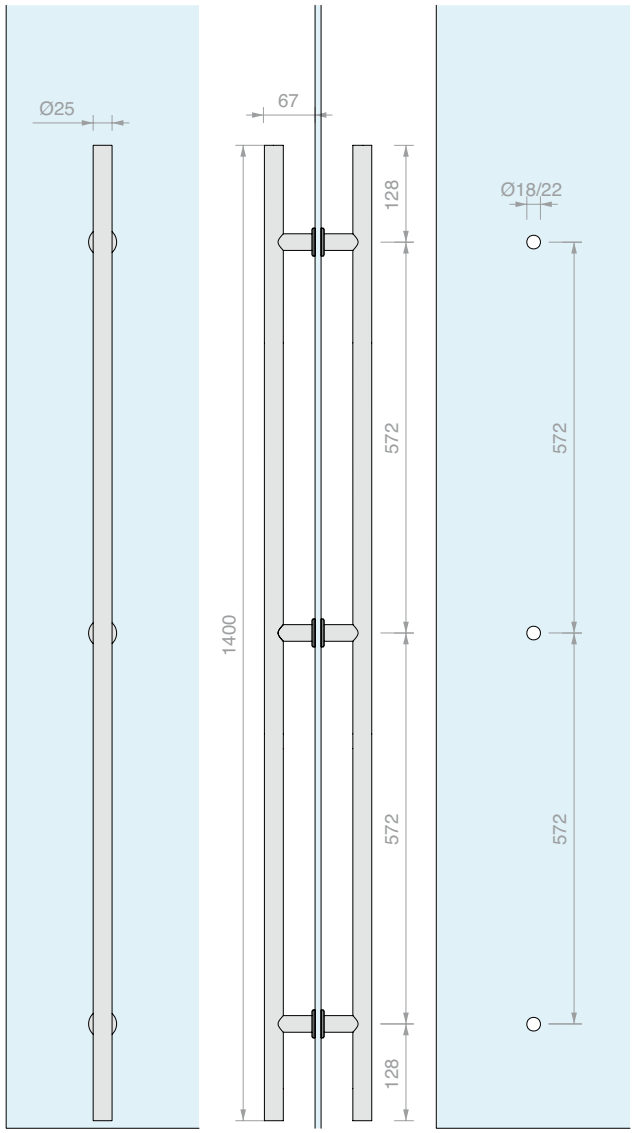

Art.	Description	Key	For glass	Qty
ZSS1400	Pair of pull handles	Different	From **8** to **21.5** mm	1 Pc
ZMMS1400	Single pull handle	Different	From **8** to **21.5** mm	1 Pc
ZSS1400U	Pair of pull handles	Single	From **8** to **21.5** mm	1 Pc
ZMMS1400U	Single pull handle	Single	From **8** to **21.5** mm	1 Pc

DUSTPROOF SOCKET

Finish: /1 /3

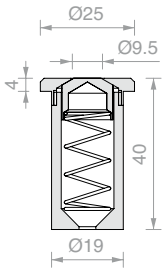

Art.	Q.ty
GL7300	1 Pc

LOGLI is the official distributor of all PBA products.
Certain solutions featuring the most commonly requested designs
and functionalities are available for immediate delivery.

And any PBA product is available on demand.

SQUARE PULL HANDLES WITH CONCEALED LOCK

Material: AISI 316 L stainless steel
With 3 keys and floor dustproof socket.
Double fixing Art. PBAAD81 or single fixing Art. PBAAS11 on glass to be ordered separately
Different key.
Pin Ø12 x 20 mm
Finish*: /8 /15
*/15 only on demand

PBA200QV01

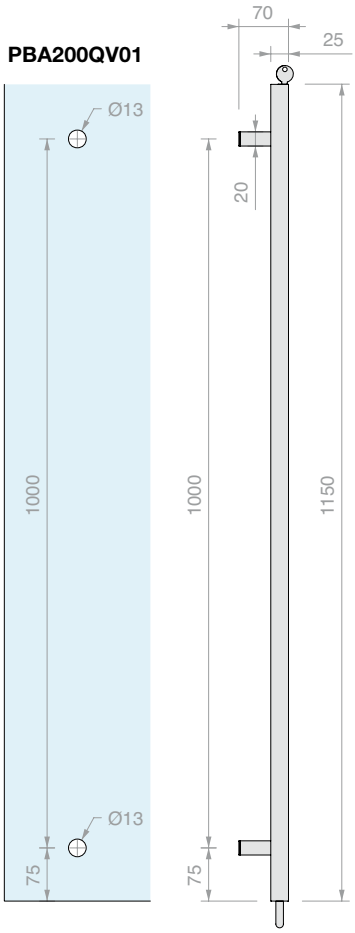

PBA200QV01/D

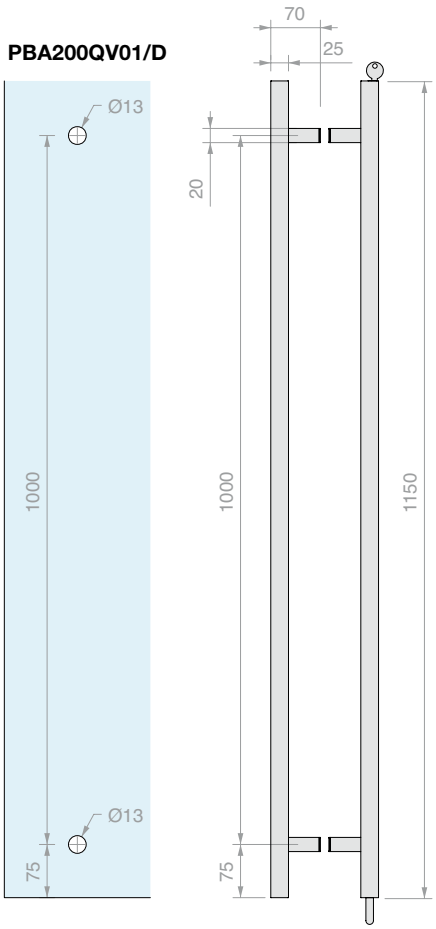

Art.	Description	Locking	For glass	Qty
PBA200QV01	Single pull handle	Lower pin	From **8** to **17.5** mm	1 Pc
PBA200QV01/D	Pair of pull handles	Lower pin	From **8** to **17.5** mm	1 Pc

PAIR OF SQUARE PULL HANDLES WITH FLUSH FRONT LOCK AND INTERNAL DOOR KNOB

Material: AISI 316 L stainless steel
With 3 keys and floor dustproof socket.
Different key
Pin Ø12 x 20 mm
Finish*: /8 /15
*/15 only on demand

Art.	Length	Locking	For glass	Qty
PBA200QY02	**1250** mm	Lower pin	From **8** to **17.5** mm	1 Pc
PBA200QY04	**2200** mm	Lower pin	From **8** to **17.5** mm	1 Pc
PBA200QY04/A	**customised**	Lower pin	From **8** to **17.5** mm	1 Pc
PBA200QY06/A	**customised**	Upper and lower pin	From **8** to **17.5** mm	1 Pc

PBA200QY02

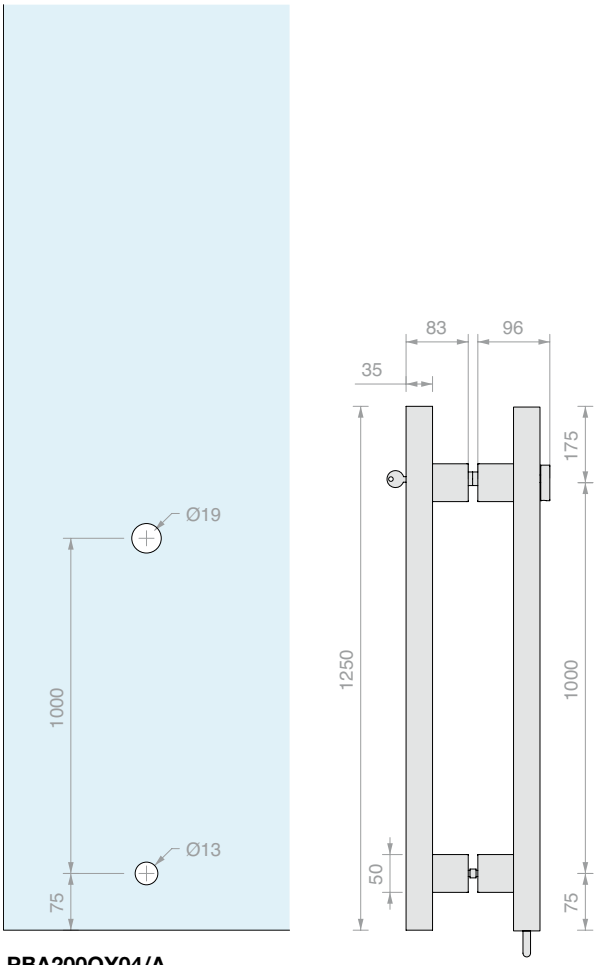

PBA200QY04

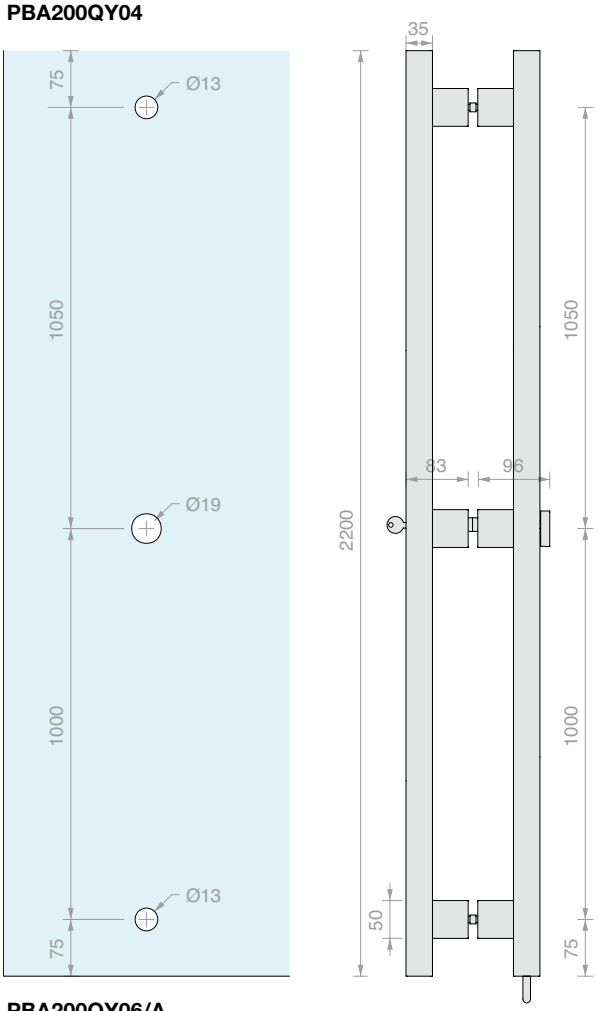

PBA200QY04/A

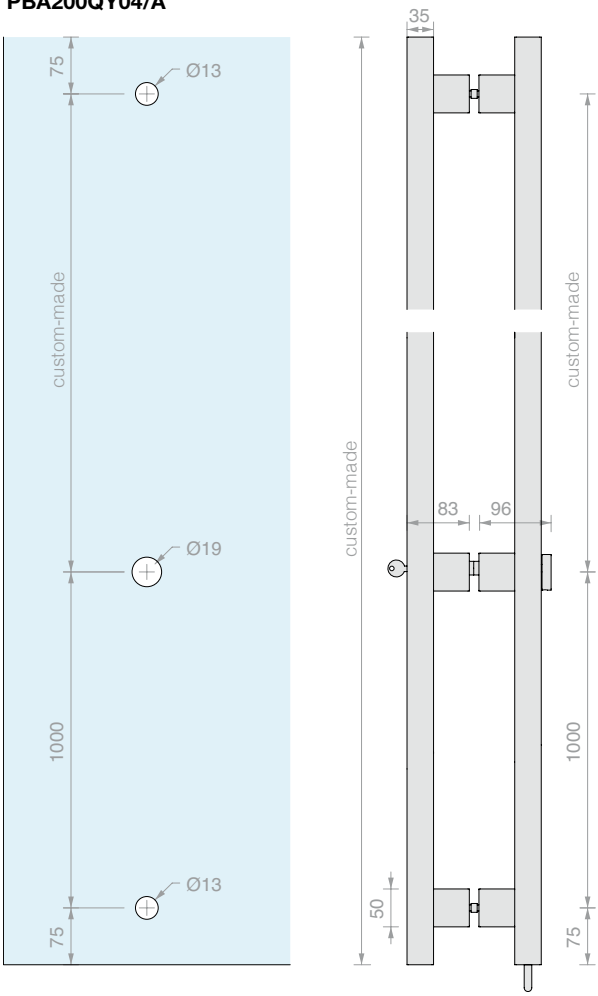

PBA200QY06/A

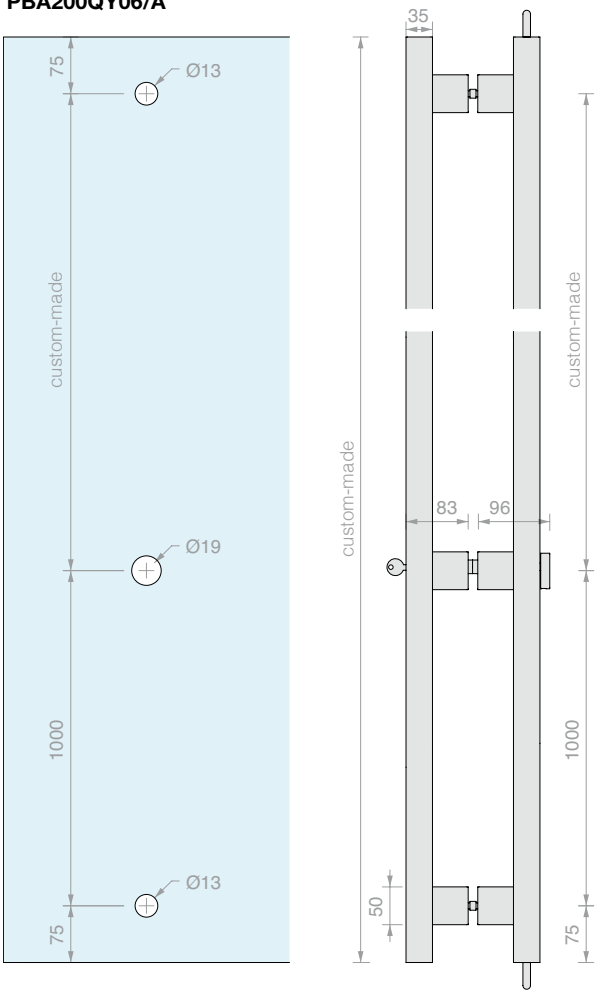

PAIR OF ROUND PULL HANDLES WITH FLUSH FRONT LOCK AND INTERNAL DOOR KNOB

Material: AISI 316 L stainless steel
With 3 keys and floor dustproof socket.
Different key
Pin Ø12 x 20 mm
Finish*: /8 /15
*/15 only on demand

Art.	Length	Locking	For glass	Qty
PBA200Y002	**1250** mm	Lower pin	From **8** to **17.5** mm	1 Pc
PBA200Y004	**2200** mm	Lower pin	From **8** to **17.5** mm	1 Pc
PBA200Y004/A	**customised**	Lower pin	From **8** to **17.5** mm	1 Pc
PBA200Y006/A	**customised**	Upper and lower pin	From **8** to **17.5** mm	1 Pc

PBA200Y002

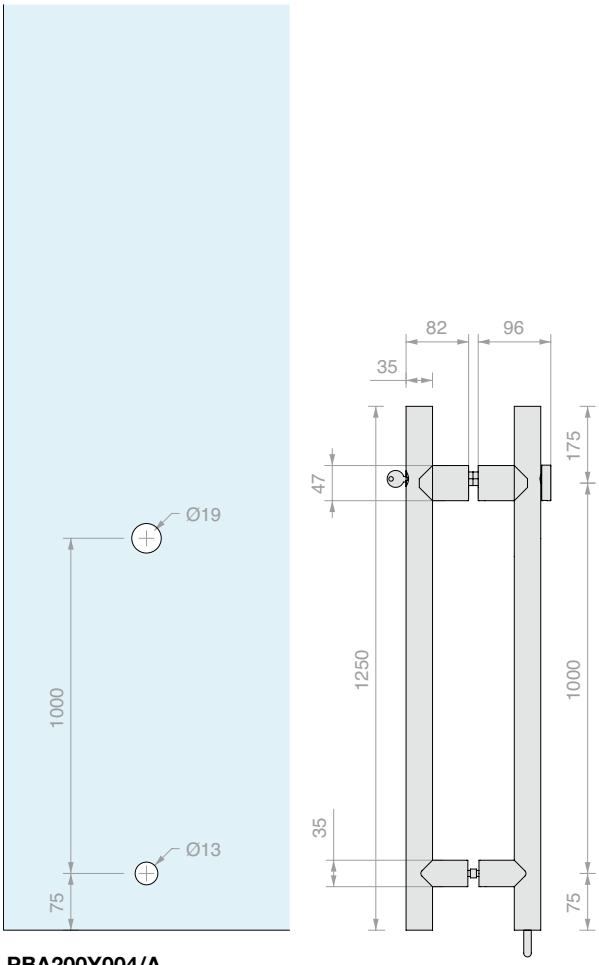

PBA200Y004

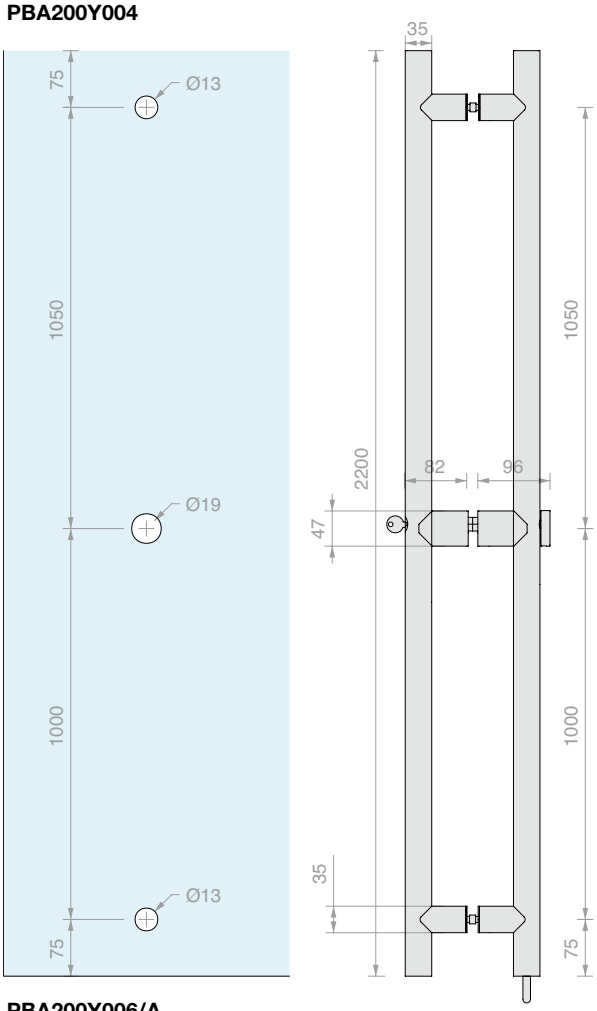

PBA200Y004/A

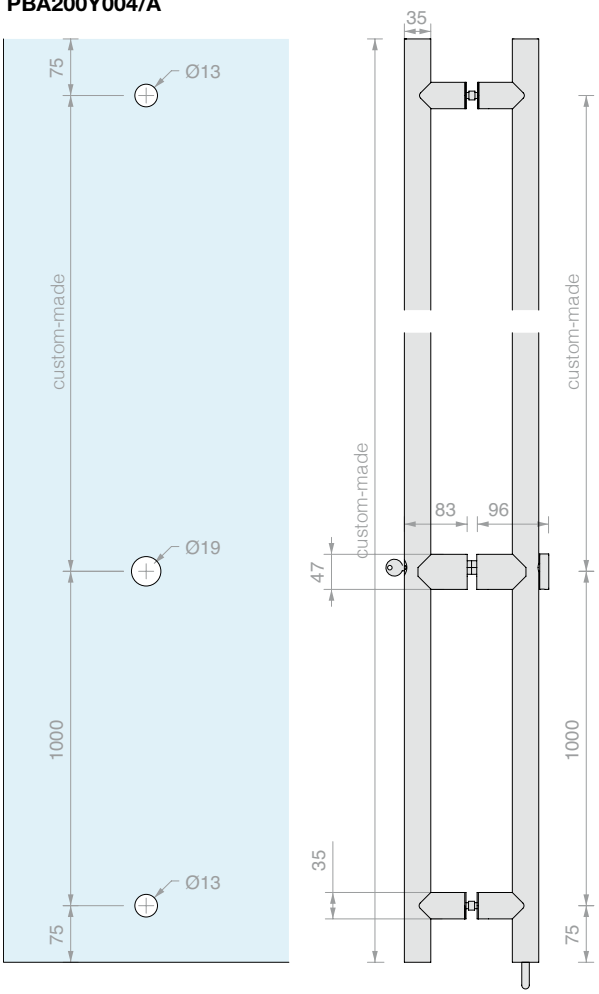

PBA200Y006/A

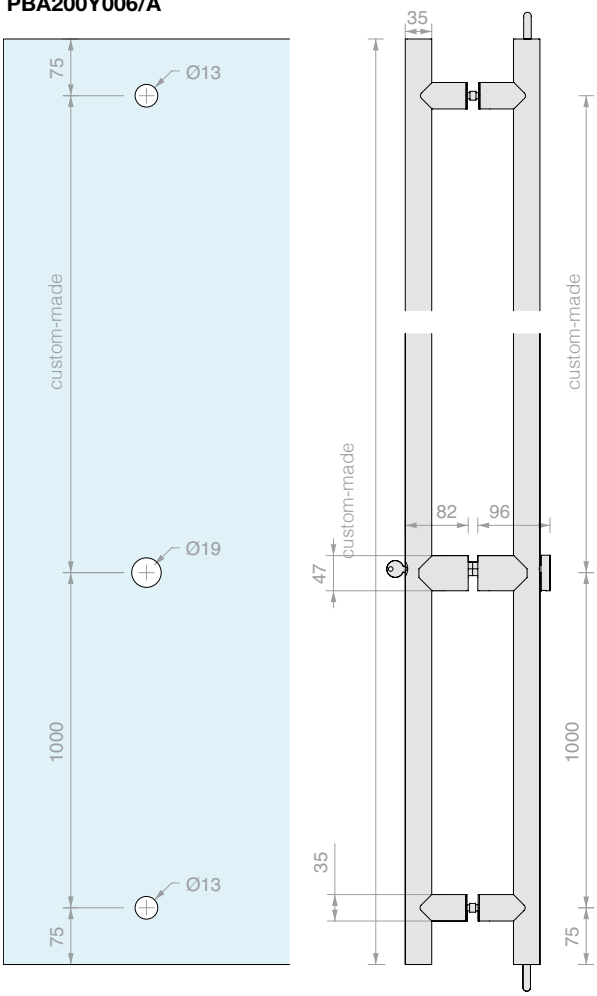

PAIR OF ROUND PULL HANDLES WITH FLUSH FRONT LOCK AND INTERNAL DOOR KNOB

Material: Aluminium
With 3 keys and floor dustproof socket.
Different key
Pin Ø12 x 20 mm
Finish*: /6 /66 /67 /97
*/66, /67 only on demand

Art.	Length	Locking	For glass	Qty
PBA200YA02	**1250** mm	Lower pin	From **8** to **17.5** mm	1 Pc
PBA200YA04	**2200** mm	Lower pin	From **8** to **17.5** mm	1 Pc
PBA200YA04/A	**customised**	Lower pin	From **8** to **17.5** mm	1 Pc
PBA200YA06/A	**customised**	Upper and lower pin	From **8** to **17.5** mm	1 Pc

PBA200YA02

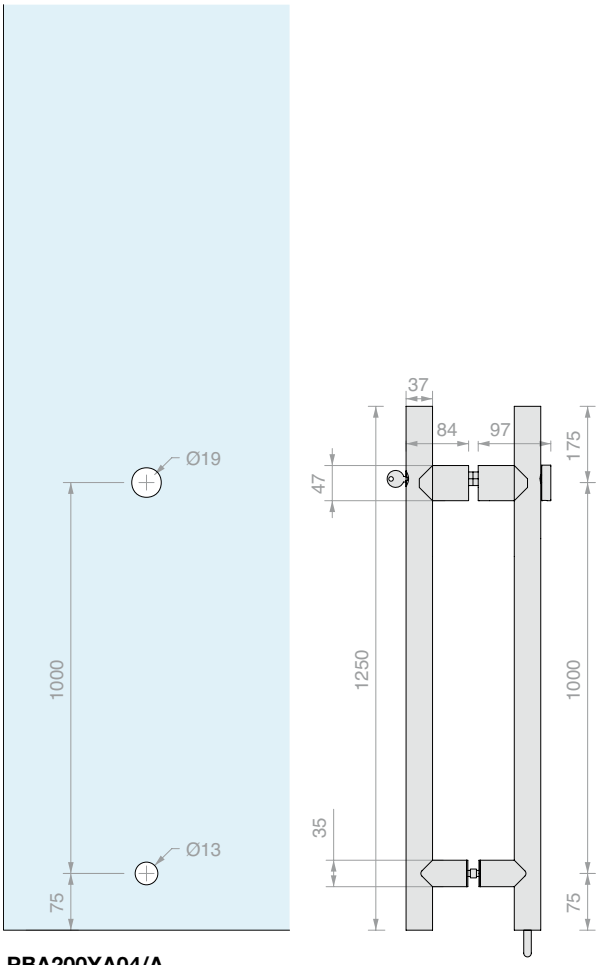

PBA200YA04

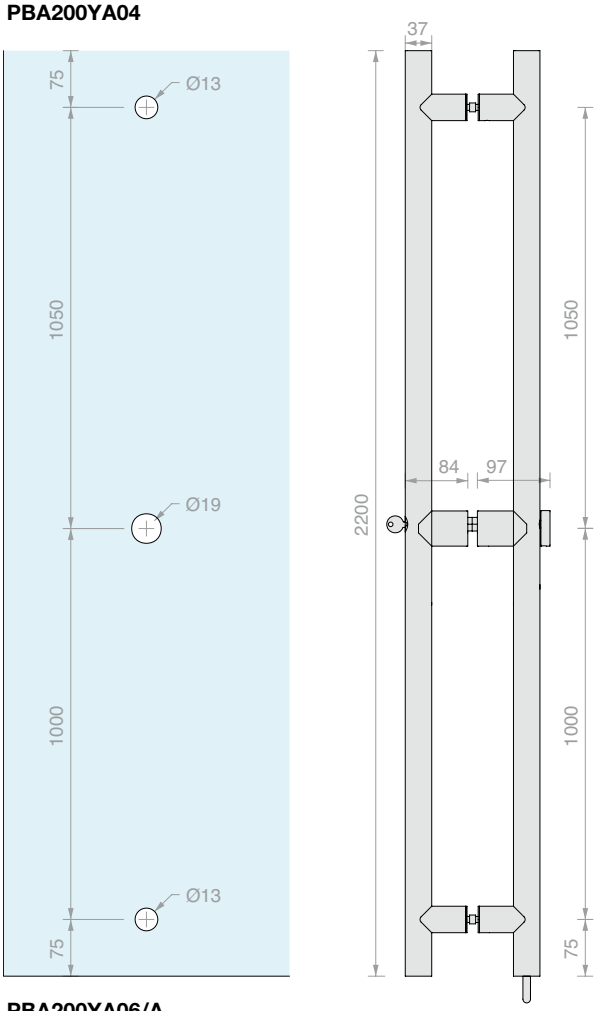

PBA200YA04/A

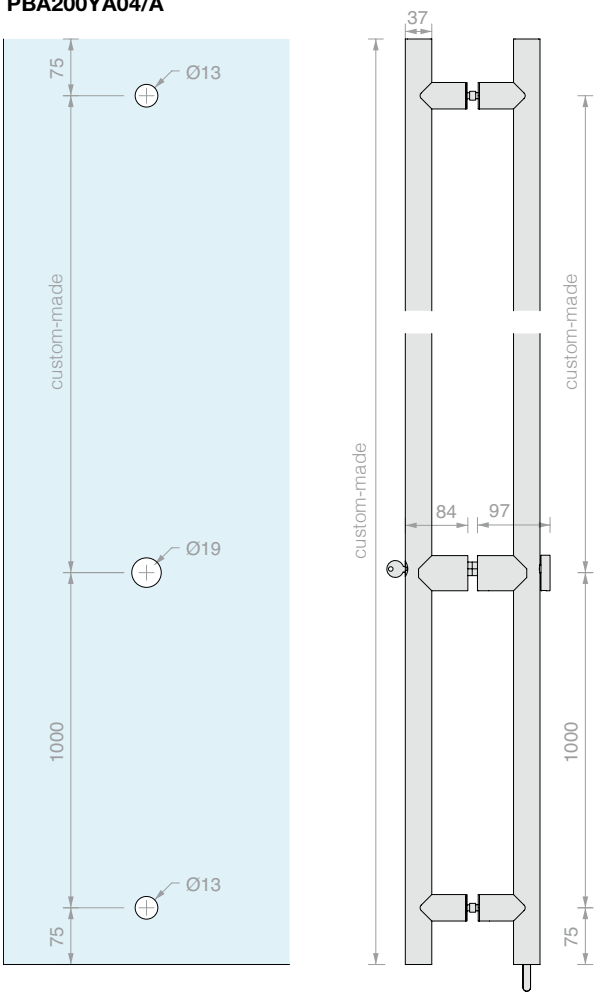

PBA200YA06/A

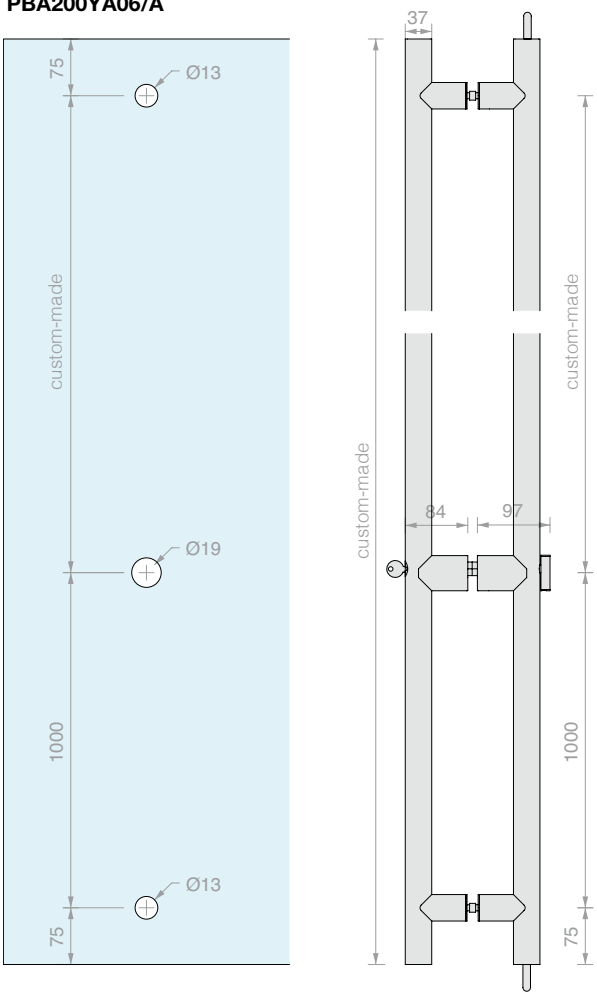

ROUND GLASS STRIKE PLATE

Material: AISI 316 L stainless steel

For PBA pull handles

Finish: /8 /15*

*on demand

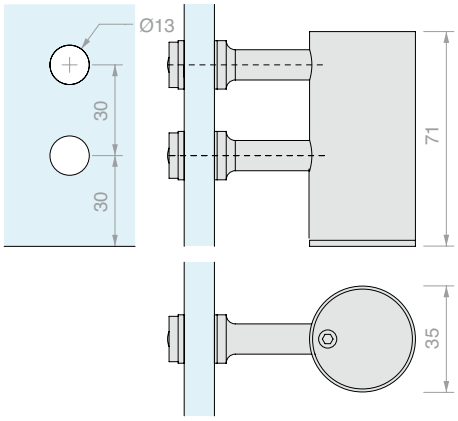

Art.	For glass	Qty
PBA200CK	From **8** to **17.5** mm	1 Pc

SQUARE UPPER GLASS STRIKE PLATE

Material: AISI 316 L stainless steel

For PBA pull handles

Finish: /8 /15*

*on demand

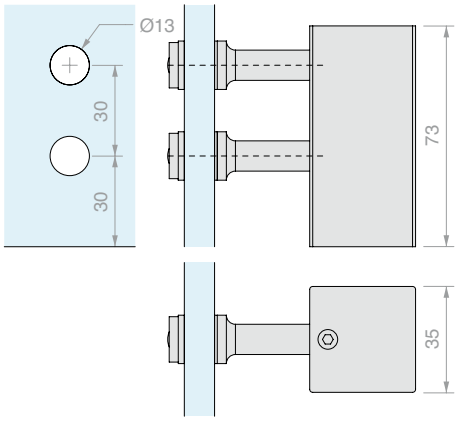

Art.	For glass	Qty
PBA200CKQ	From **8** to **17.5** mm	1 Pc

DUSTPROOF SOCKET

Material: Brass

Finish*: /95

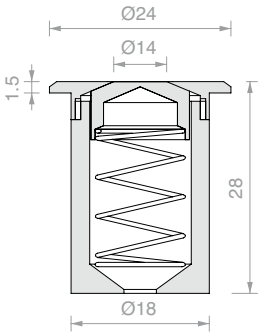

Art.	Qty
PBA200CSK	1 Pc

DOUBLE FIXING ON GLASS

For pull handle PBA200QV01/D
Glass hole Ø13 mm

Art.	Qty
PBAAD81	1 Pc

DOUBLE FIXING ON WOOD, ALUMINIUM AND PVC

For pull handle PBA200QV01/D
Door hole Ø9 mm

Art.	Qty
PBA71	1 Pc

SINGLE FIXING ON GLASS

For pull handle PBA200QV01
Glass hole Ø13 mm
Finish*: /8 /15
*/15 only on demand

Art.	Qty
PBAAS11	1 Pc

SINGLE BLIND FIXING ON WOOD, ALUMINIUM, PVC

For pull handle PBA200QV01
Finish*: /8 /15
*/15 only on demand

Art.	Qty
PBA911	1 Pc

PAIR OF ROUND PULL HANDLES

Material: AISI 304 stainless steel

Finish: /8 - On demand: /15

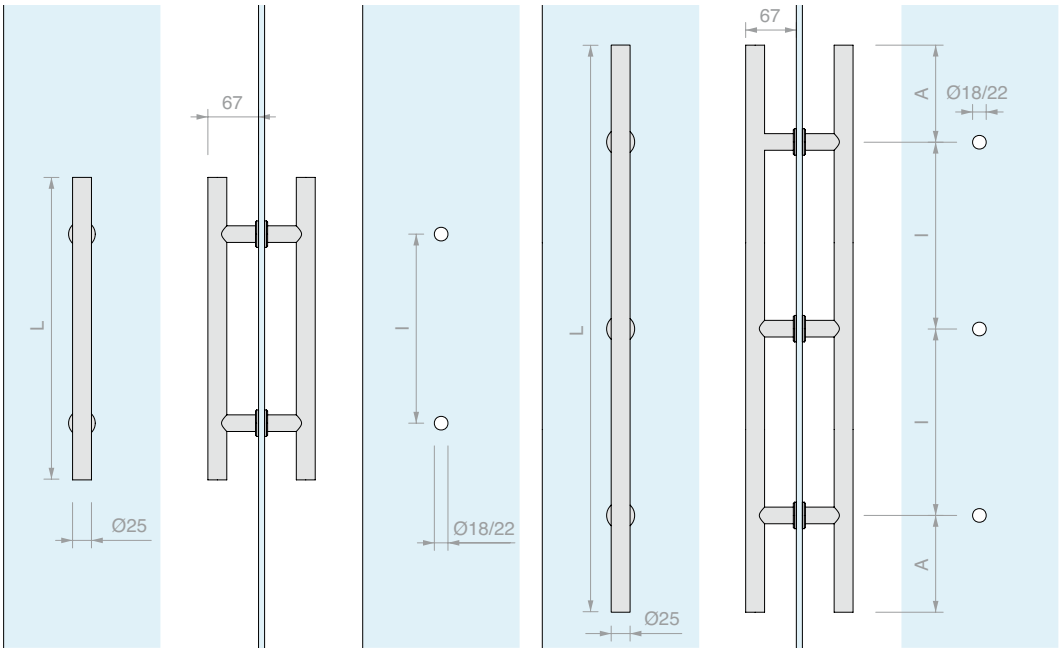

Art.	L	I	A	For glass	Qty
ZMT400	**400** mm	**250** mm		From **8** to **21.5** mm	1 Pc
ZMT500	**500** mm	**300** mm		From **8** to **21.5** mm	1 Pc
ZMT800	**800** mm	**400** mm		From **8** to **21.5** mm	1 Pc
ZMT1400	**1400** mm	**572** mm	**128** mm	From **8** to **21.5** mm	1 Pc
ZMT2000	**2000** mm	**797** mm	**203** mm	From **8** to **21.5** mm	1 Pc
ZMT/A	Customised				1 Pc

SINGLE ROUND PULL HANDLE

Material: AISI 304 stainless steel

Finish: /8 - On demand: /15

Recommended tool for tightening Art. UT250

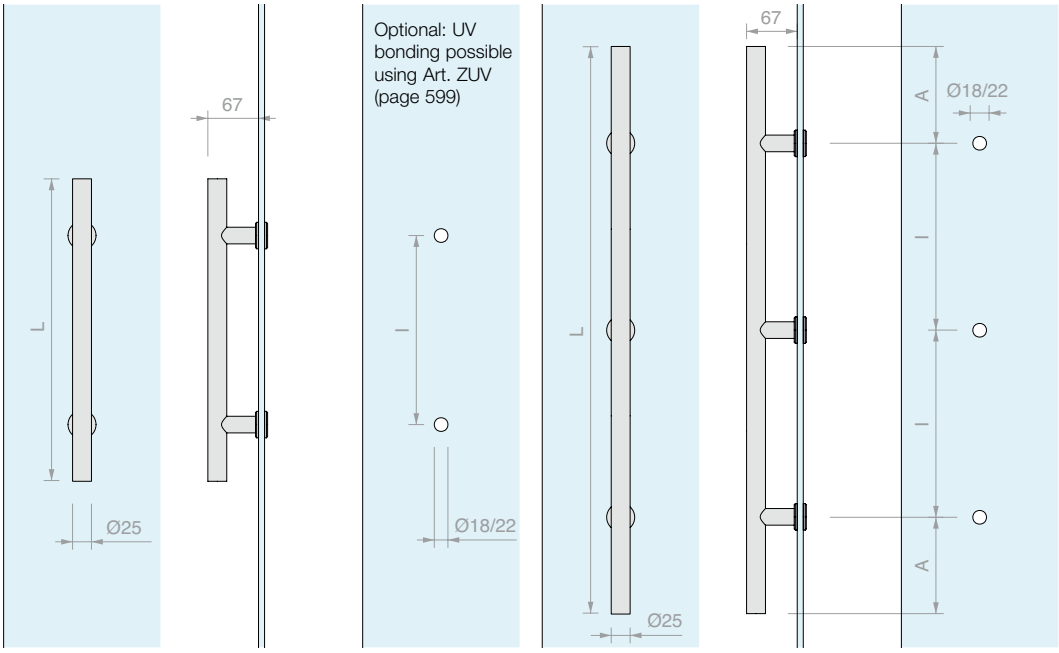

Art.	L	I	A	For glass	Qty
ZSIT400	**400** mm	**250** mm		From **8** to **21.5** mm	1 Pc
ZSIT500	**500** mm	**300** mm		From **8** to **21.5** mm	1 Pc
ZSIT800	**800** mm	**400** mm		From **8** to **21.5** mm	1 Pc
ZSIT1400	**1400** mm	**572** mm	**128** mm	From **8** to **21.5** mm	1 Pc
ZSIT2000	**2000** mm	**797** mm	**203** mm	From **8** to **21.5** mm	1 Pc
ZSIT	Customised				1 Pc

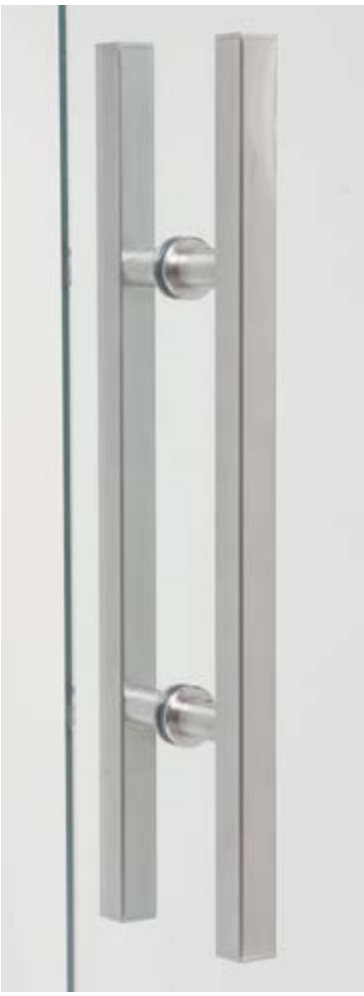

PAIR OF SQUARE PULL HANDLES

Material: AISI 304 stainless steel

Finish: /8 - On demand: /15

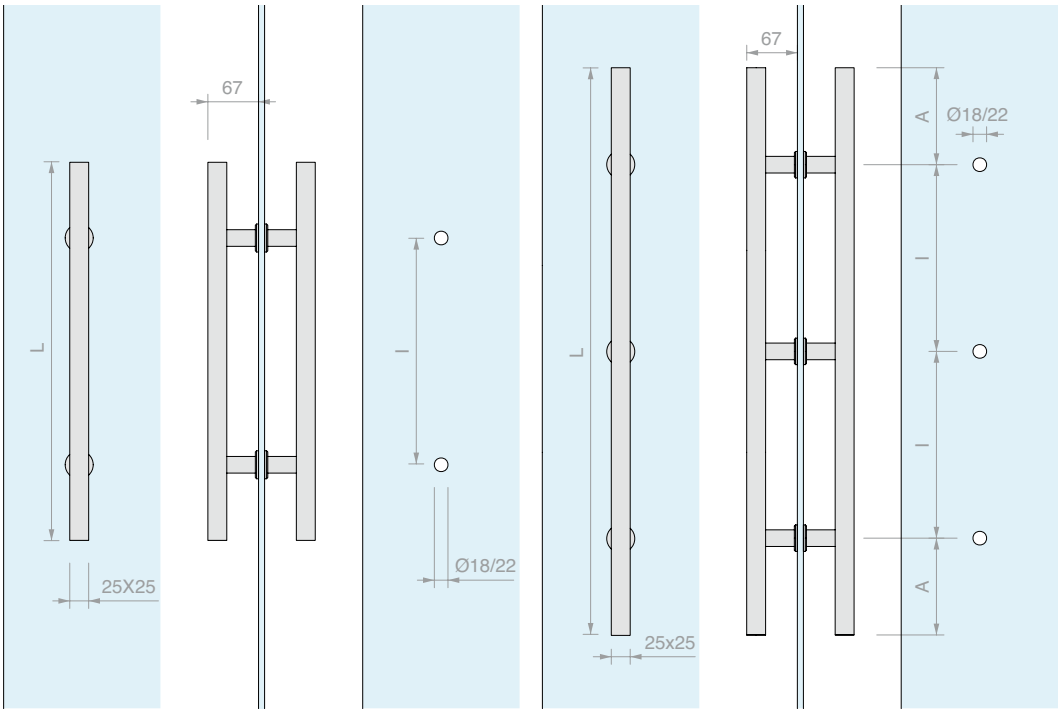

Art.	L	I	A	For glass	Qty
ZQUA500	**500** mm	**300** mm		From **8** to **21.5** mm	1 Pc
ZQUA800	**800** mm	**400** mm		From **8** to **21.5** mm	1 Pc
ZQUA1400	**1400** mm	**572** mm	**128** mm	From **8** to **21.5** mm	1 Pc
ZQUA/A	Customised				1 Pc

SINGLE SQUARE PULL HANDLE

Material: AISI 304 stainless steel

Finish: /8 - On demand: /15

Recommended tool for tightening Art. UT250

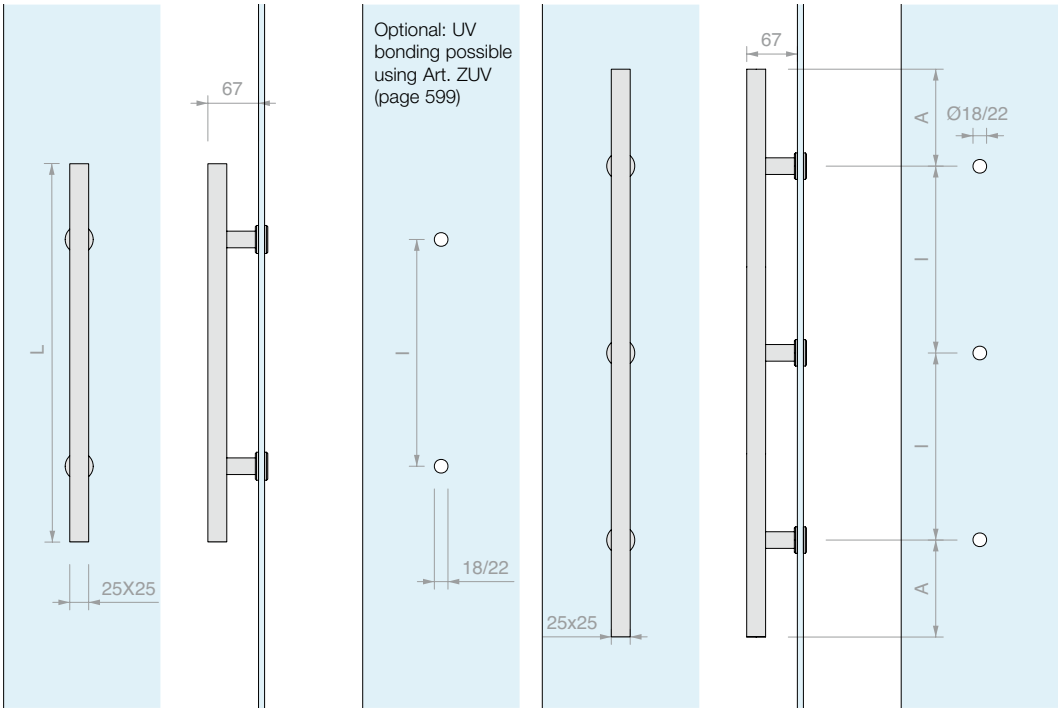

Art.	L	I	A	For glass	Qty
ZSIQ500	**500** mm	**300** mm		From **8** to **21.5** mm	1 Pc
ZSIQ800	**800** mm	**400** mm		From **8** to **21.5** mm	1 Pc
ZSIQ1400	**1400** mm	**572** mm	**128** mm	From **8** to **21.5** mm	1 Pc
ZSIQ/A	Customised				1 Pc

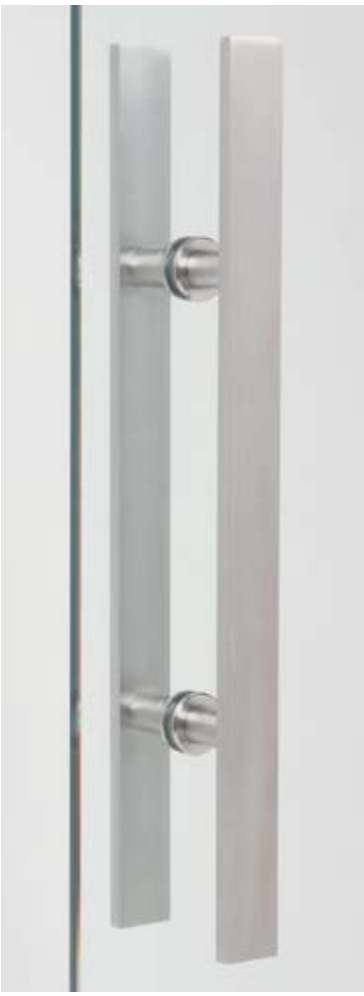

PAIR OF FLAT PULL HANDLES

Material: AISI 304 stainless steel

Finish: /8 - On demand: /15

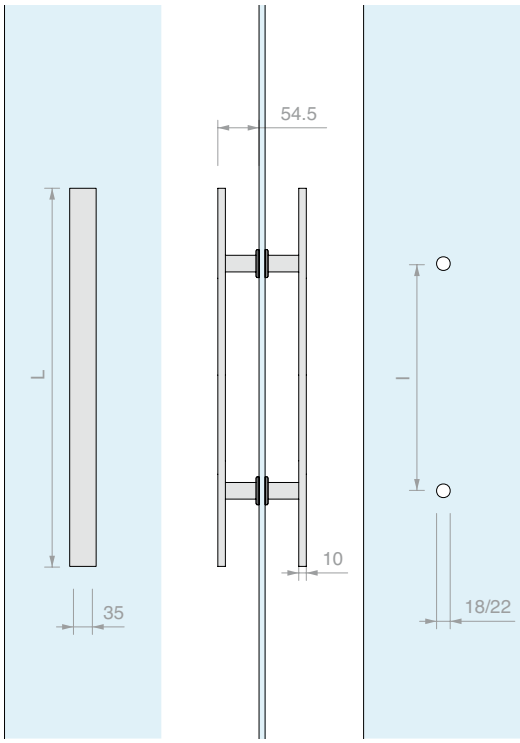

Art.	L	I	For glass	Qty
ZPI500	**500** mm	**300** mm	From **8** to **21.5** mm	1 Pc
ZPI800	**800** mm	**400** mm	From **8** to **21.5** mm	1 Pc
ZPI/A	Customised			1 Pc

SINGLE FLAT PULL HANDLE

Material: AISI 304 stainless steel

Finish: /8 - On demand: /15

Recommended tool for tightening Art. UT250

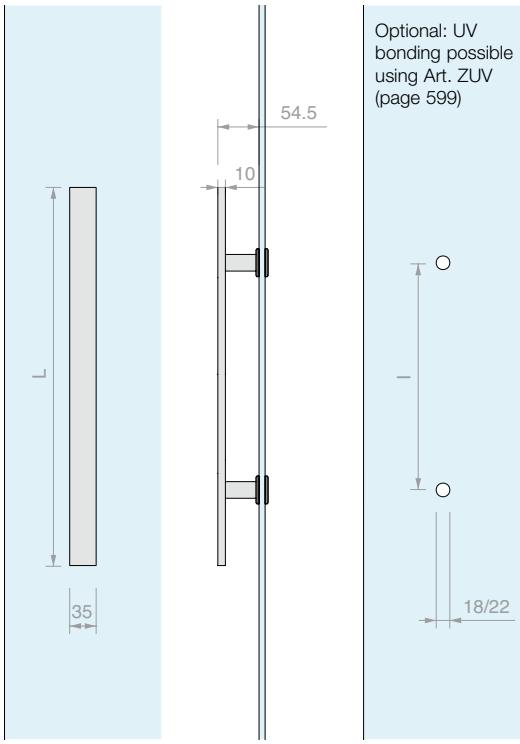

Art.	L	I	For glass	Qty
ZSIP500	**500** mm	**300** mm	From **8** to **21.5** mm	1 Pc
ZSIP800	**800** mm	**400** mm	From **8** to **21.5** mm	1 Pc
ZSIP/A	Customised			1 Pc

UV BONDING FIXING FOR Z SERIES SINGLE PULL HANDLES

Material: AISI 304 steel

Finish: /9

It is recommended to fit the ZUV fixings on the pull handle before proceeding with the bonding

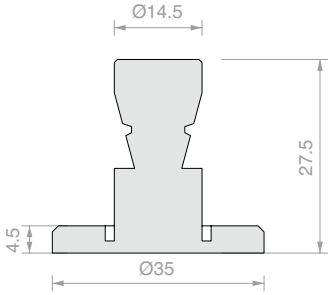

Art.	Qty
ZUV	1 Pc

FLAT FIXING FOR PULL HANDLES

Material: AISI 304 steel

Finish: /8

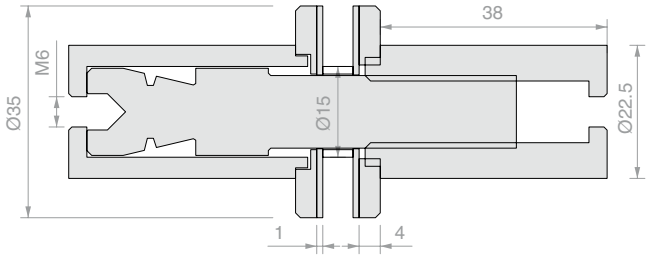

Art.	For glass	Qty
ZATT	From **8** to **21.5** mm	1 Pc

Example with Art. COFIS15B

Example with Art. BORC25

PAIR OF ROUND PULL HANDLES

Material: AISI 304 stainless steel

Finish: /8 /15

For greater thicknesses, replace the internal countersunk screws.

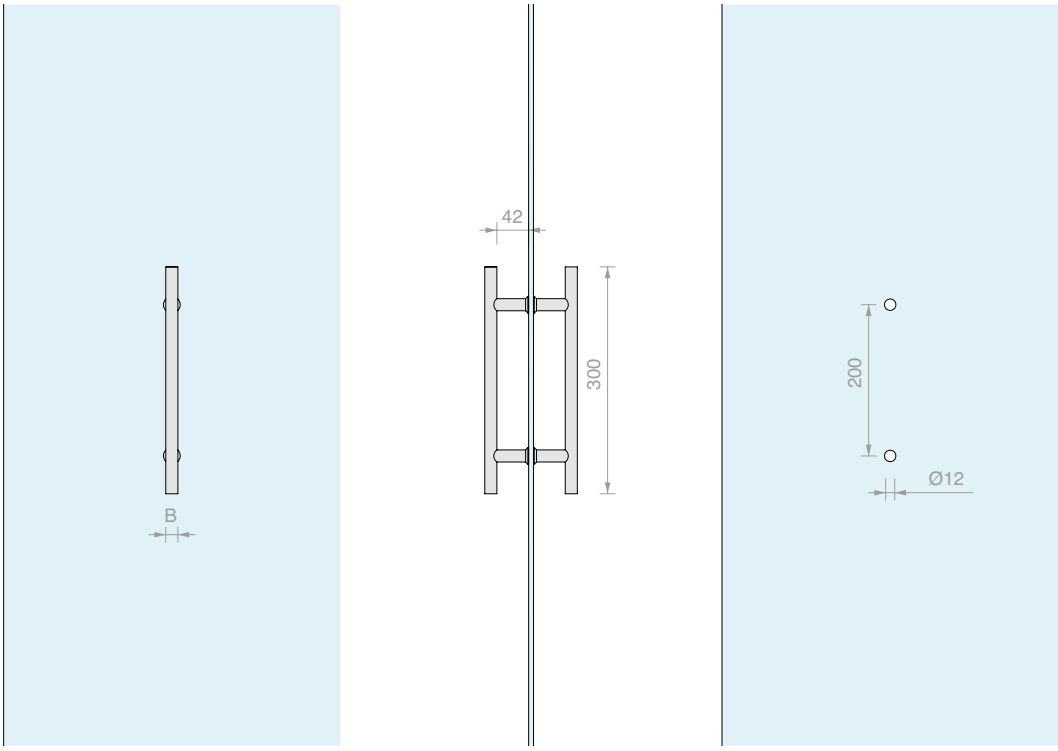

Art.	B	For glass	Qty
MN1620	**Ø16** mm	From **6** to **17.5** mm	1 Pc
MN2020	**Ø20** mm	From **6** to **17.5** mm	1 Pc

PAIR OF ROUND PULL HANDLES

Material: AISI 304 stainless steel

Finish: /8 /15 /R2

For greater thicknesses, replace the internal countersunk screws.

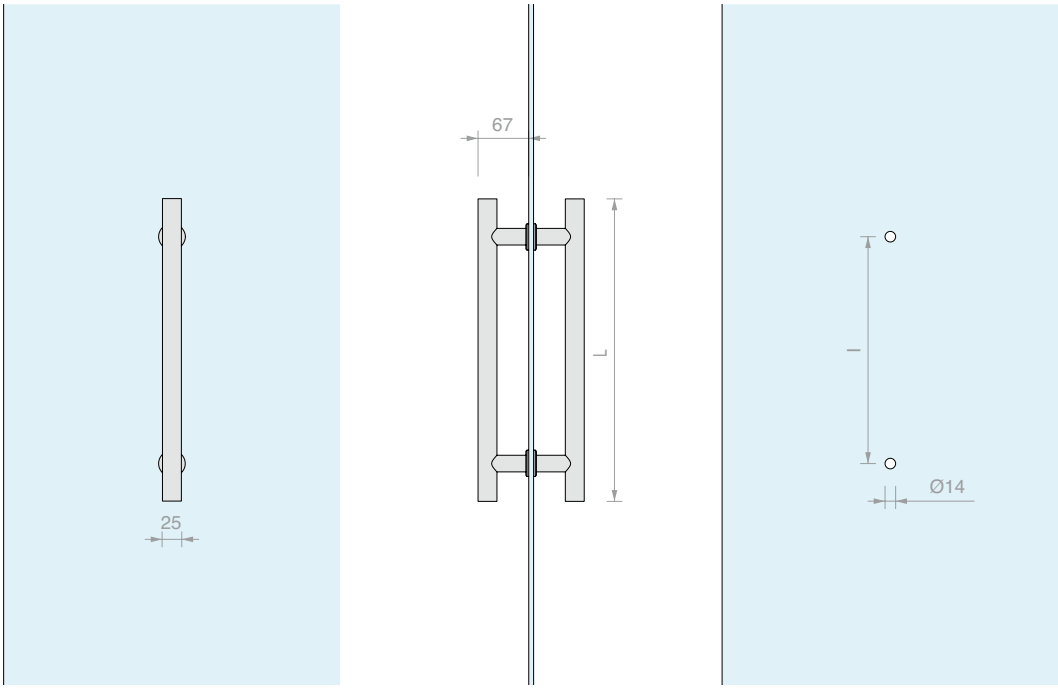

Art.	L	I	For glass	Qty
MN25300	**300** mm	**200** mm	From **6** to **21.5** mm	1 Pc
MN25400	**400** mm	**250** mm	From **6** to **21.5** mm	1 Pc
MN25500	**500** mm	**300** mm	From **6** to **21.5** mm	1 Pc
MN25800	**800** mm	**400** mm	From **6** to **21.5** mm	1 Pc

PAIR OF ROUND PULL HANDLES

Material: AISI 304 stainless steel

Finish: /8 /15 /R2

For greater thicknesses, replace the internal countersunk screws.

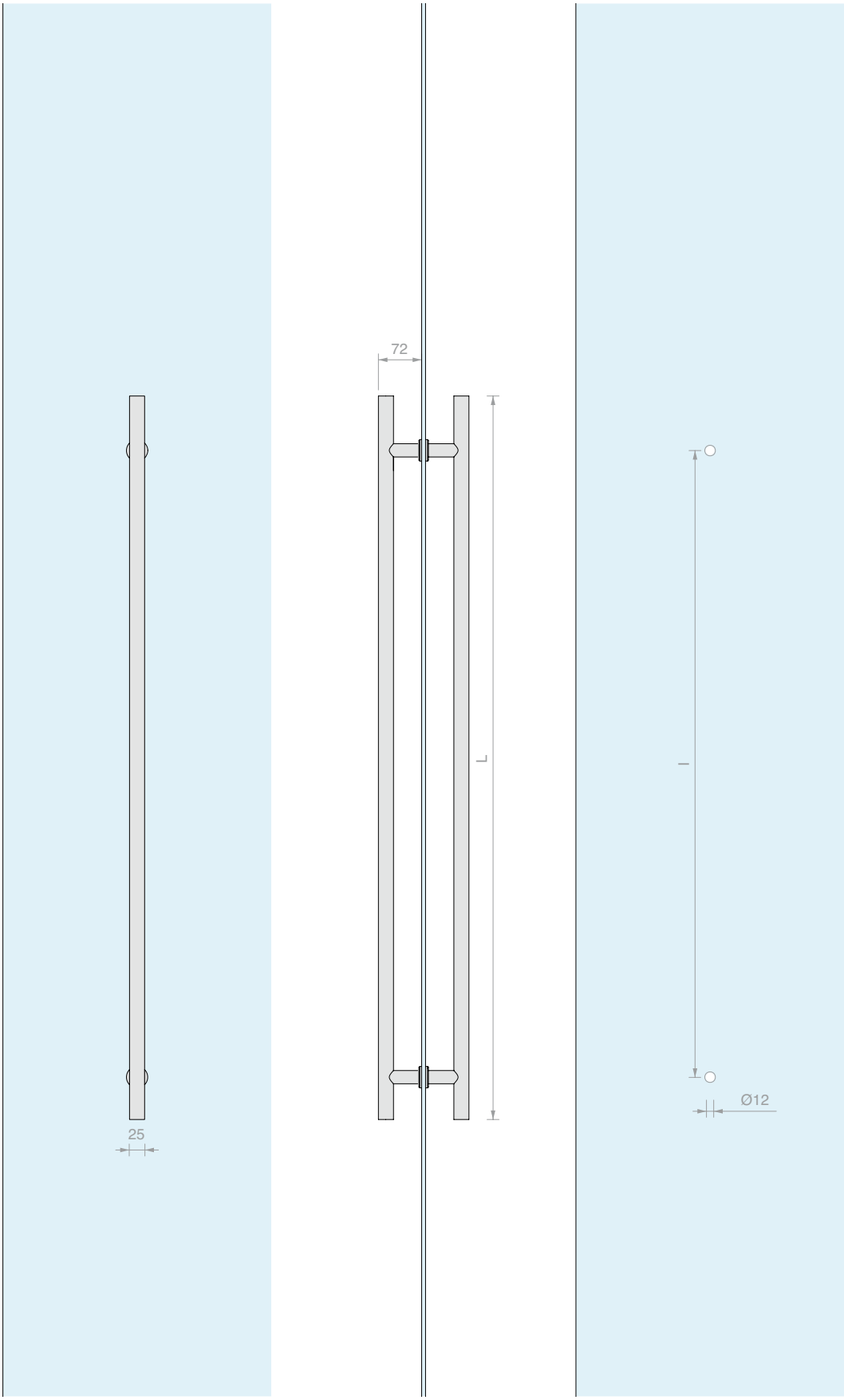

Art.	L	I	For glass	Qty
MN25850	**850** mm	**650** mm	From **6** to **17.5** mm	1 Pc
MN251200	**1200** mm	**1040** mm	From **6** to **17.5** mm	1 Pc

SINGLE SQUARE PULL HANDLE WITH DOOR KNOB

Material: AISI 304 stainless steel + zamak

Finish: /15 - Door knob and finishing screw: /1

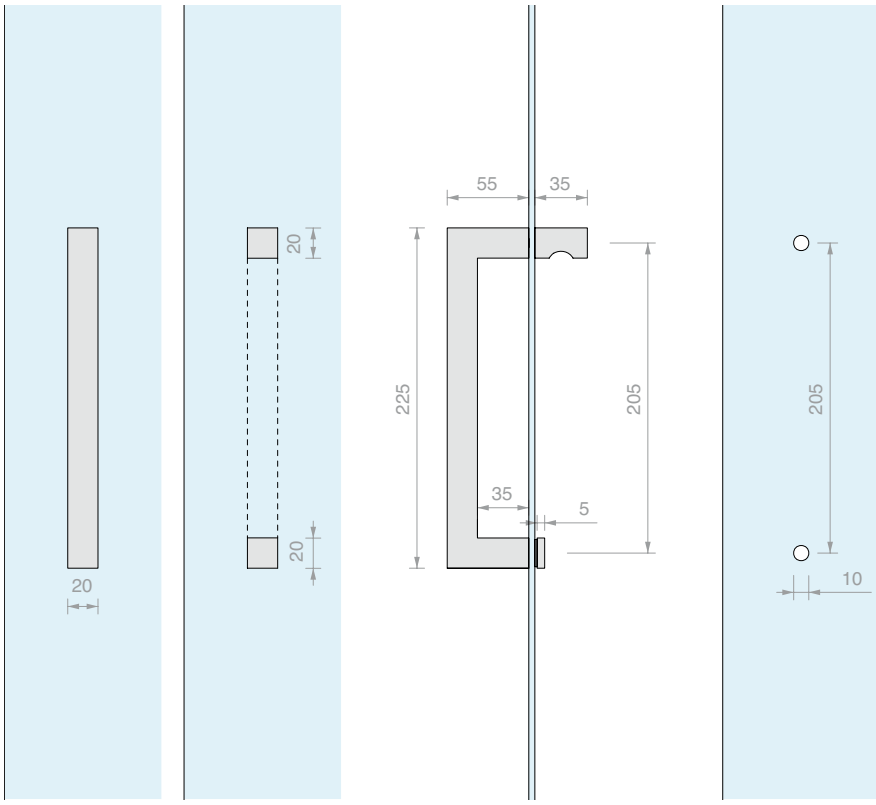

Art.	For glass	Qty
PMAN90	From **6** to **8** mm	1 Pc

SINGLE FLAT PULL HANDLE WITH DOOR KNOB

Material: AISI 304 stainless steel + zamak

Finish: /15 - Door knob and finishing screw: /1

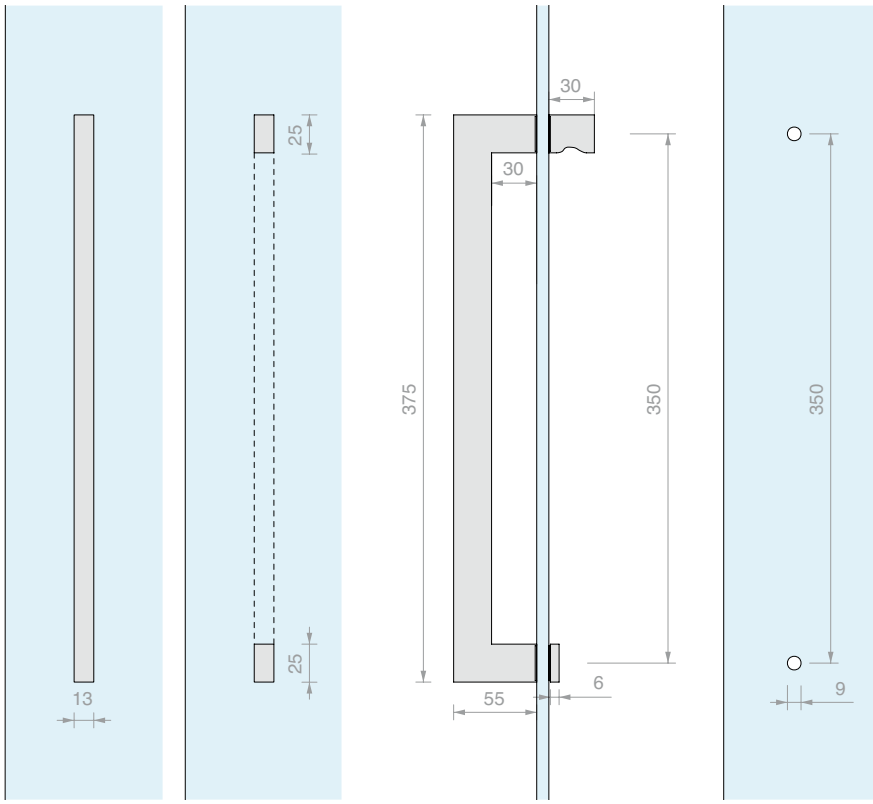

Art.	For glass	Qty
PMAN1131	From **6** to **8** mm	1 Pc

FLAT C-SHAPED PULL HANDLES

Material: Zamak

Finish: /1 /2 /4 /24 /R2

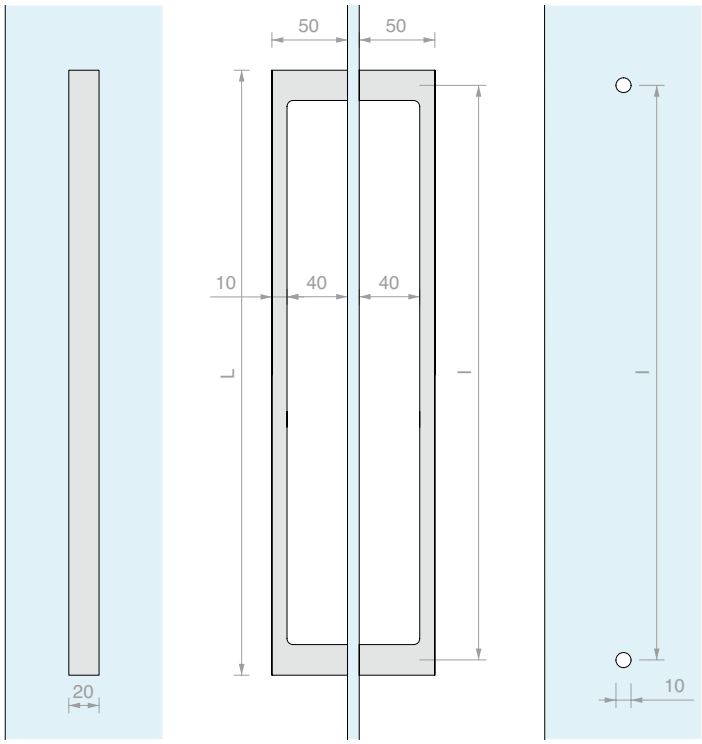

Art.	L	I	For glass	Qty
PMAN1340	**400** mm	**380** mm	From **6** to **10** mm	1 Pc
PMAN1332	**300** mm	**280** mm	From **6** to **10** mm	1 Pc
PMAN1322	**200** mm	**180** mm	From **6** to **10** mm	1 Pc

PAIR OF FLAT C-SHAPED PULL HANDLES

Material: Zamak

Finish: /1 /24

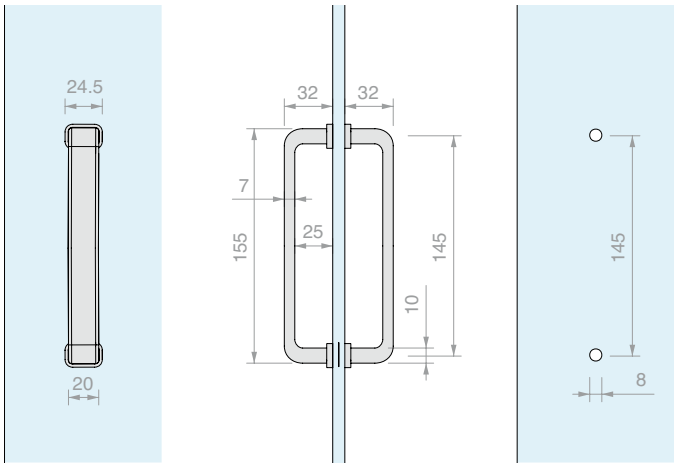

Art.	For glass	Qty
PMAN1530	From **6** to **8** mm	1 Pc

PAIR OF SQUARE PULL HANDLES

Material: Aluminium

Finish: /88 /91 /97

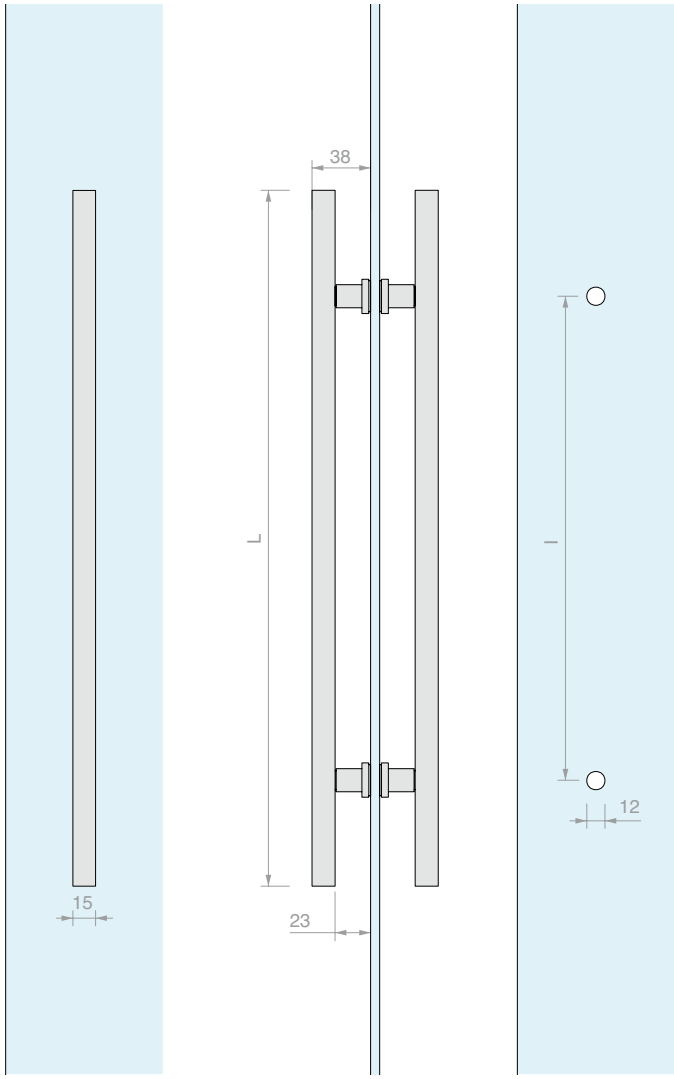

Art.	L	I	For glass	Qty
LM320	**460** mm	**320** mm	From **6** to **12** mm	1 Pc
LM224	**310** mm	**224** mm	From **6** to **12** mm	1 Pc
LM128	**200** mm	**128** mm	From **6** to **12** mm	1 Pc

PAIR OF ROUND PULL HANDLES

Material: Aluminium or brass depending on the selected finish

Finish: /1 /3 /97

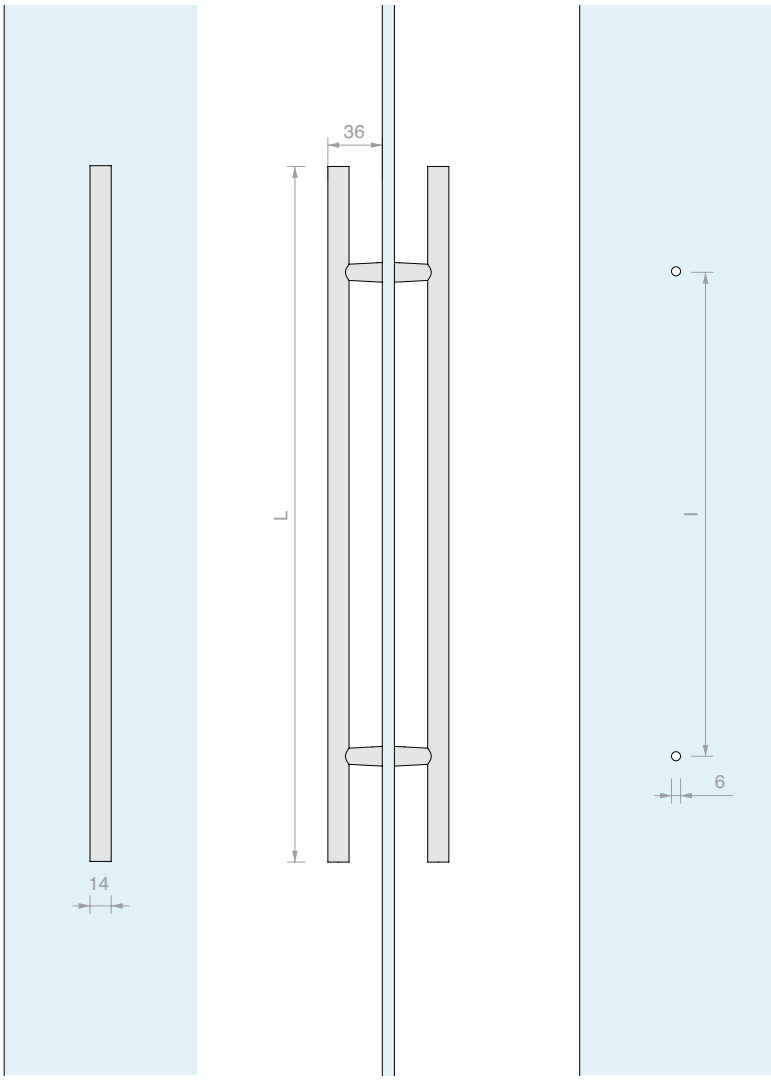

Art.	L	`l	For glass	Qty
PM1	**460** mm	**320** mm	**6/8** mm - **10/12** mm with the addition of Art. PM4	1 Pc
PM2	**310** mm	**224** mm	**6/8** mm - **10/12** mm with the addition of Art. PM4	1 Pc
PM3	**200** mm	**128** mm	**6/8** mm - **10/12** mm with the addition of Art. PM4	1 Pc

4 ADDITIONAL WASHERS FOR INCREASING BASE PLATE

Material: Zamak

Finish: /1 /3

Art.	Q.ty
PM4	1 Pc

PAIR OF ROUND WOOD PULL HANDLES

Material: AISI 304 stainless steel, wood

Finish: /8 /15

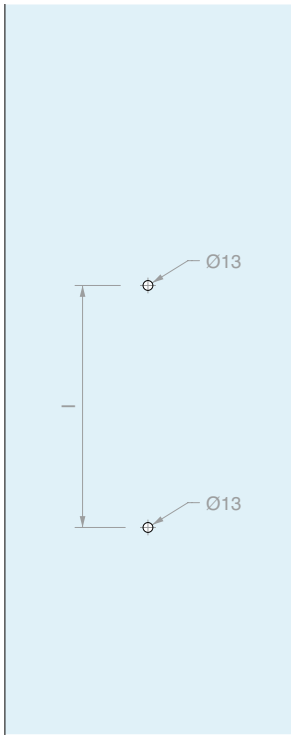

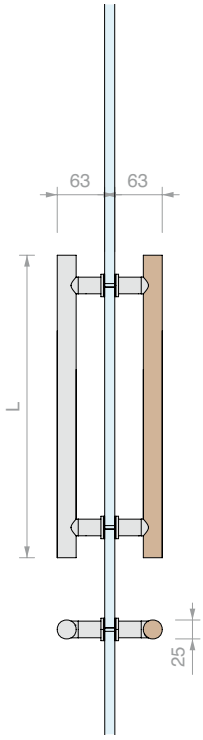

Art.	L	I	Type	For glass	Qty
MNTL25300	**300** mm	**220** mm	Beech	From **8** to **13.5** mm	1 Pc
MNTL25400	**400** mm	**320** mm	Beech	From **8** to **13.5** mm	1 Pc

PAIR OF ROUND WOOD C-SHAPED HANDLES

Material: AISI 304 stainless steel, wood

Finish: /8 /15

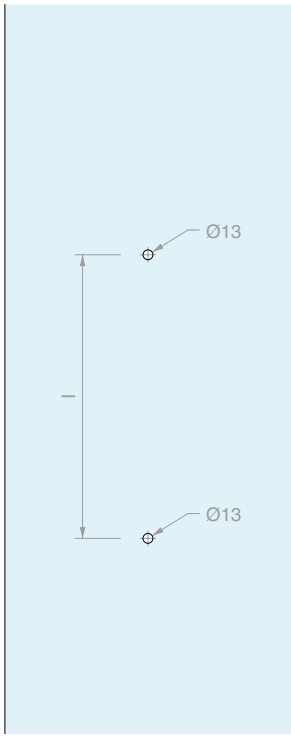

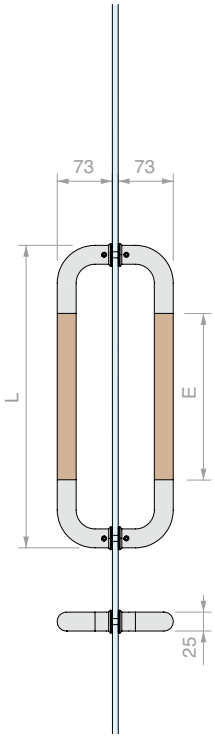

Art.	L	I	E	Type	For glass	Qty
MNTLAC25300	**300** mm	**275** mm	**120** mm	Beech	From **8** to **13.5** mm	1 Pc
MNTLAC25400	**400** mm	**375** mm	**220** mm	Beech	From **8** to **13.5** mm	1 Pc

PAIR OF SQUARE WOOD PULL HANDLES

Material: AISI 304 stainless steel, wood

Finish: /8 /15

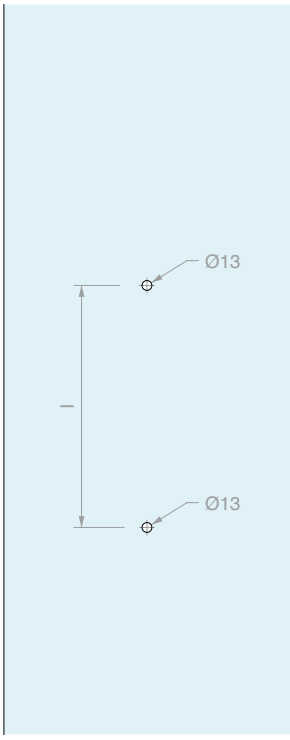

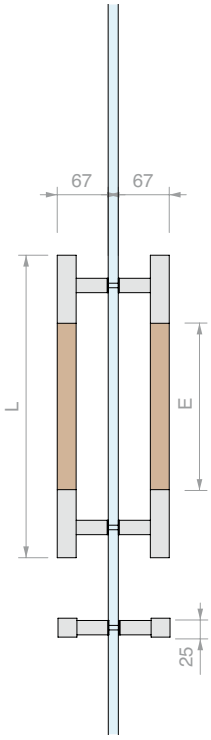

Art.	L	I	E	Type	For glass	Qty
MNQL25300	**300** mm	**200** mm	**120** mm	Beech	From **8** to **13.5** mm	1 Pc
MNQL25400	**400** mm	**300** mm	**220** mm	Beech	From **8** to **13.5** mm	1 Pc

PAIR OF SQUARE WOOD C-SHAPED PULL HANDLES

Material: AISI 304 stainless steel, wood

Finish: /8 /15

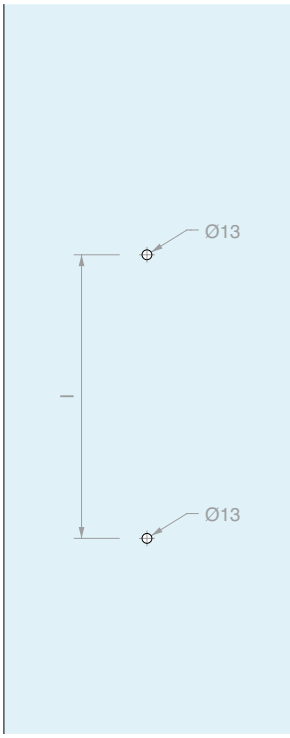

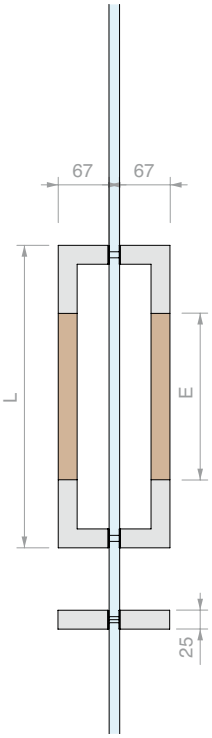

Art.	L	I	E	Type	For glass	Qty
MNQLAC25300	**300** mm	**275** mm	**120** mm	Beech	From **8** to **13.5** mm	1 Pc
MNQLAC25400	**400** mm	**375** mm	**220** mm	Beech	From **8** to **13.5** mm	1 Pc

HANDLES WITH VHB FIXING

SURFACE PREPARATION

To ensure the best possible adhesion, the surface where the handle will be applied must be cleaned with the wipe provided (included in the kit), dry and at ambient temperature (minimum 21°C - maximum 38°C). Heptane or isopropyl alcohol and water can also be used as cleaning solvents. After having removed the protective tab from the two-sided tape strip, apply firm pressure between the handle and the support. The joint is 90% set after one day and will be fully set after 72 hours. To further increase the bond on surfaces in contact with water, heat the area to 70°C for around one hour.

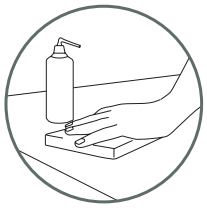

clean with solvent

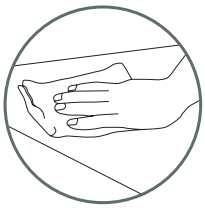

dry with a wipe

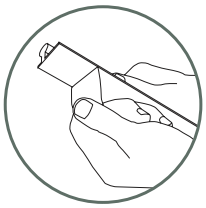

Remove the protective film and apply, pressing firmly

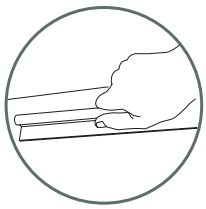

Press firmly

HANDLE FOR SLIDING DOORS WITH VHB FIXING 400

Material: Aluminium

Finish: /91 /97

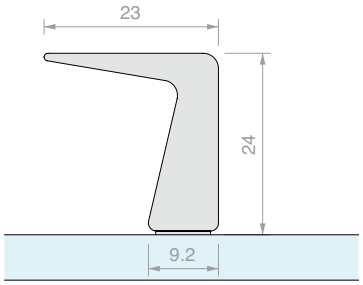

Art.	Length	Qty
MAN400V160	**240** mm	1 Pc
MAN400V320	**390** mm	1 Pc
MAN400V448	**540** mm	1 Pc

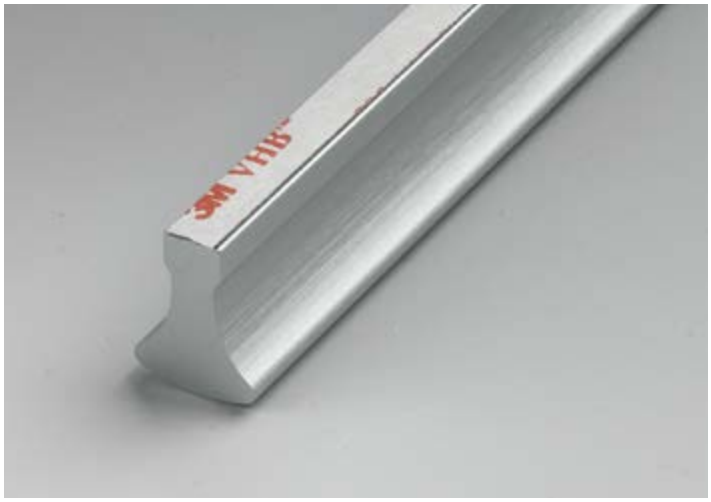

HANDLE FOR SLIDING DOORS WITH VHB FIXING 401

Material: Aluminium

Finish: /91 /97

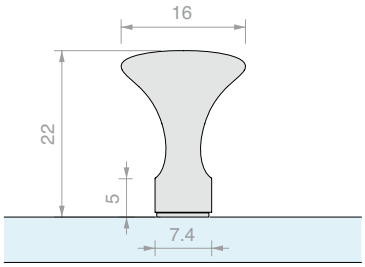

Art.	Length	Qty
MAN401V160	**240** mm	1 Pc
MAN401V320	**390** mm	1 Pc
MAN401V448	**540** mm	1 Pc

HANDLE FOR SLIDING DOORS WITH VHB FIXING 412

Material: Aluminium

Finish: /88 /91 /97

Other finishes available on demand

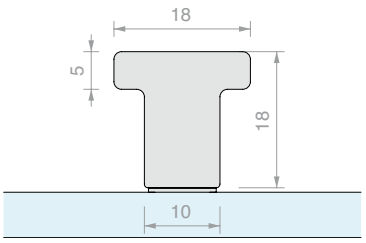

Art.	Length	Qty
MAN412V250	**250** mm	1 Pc
MAN412V350	**350** mm	1 Pc

HANDLE FOR SLIDING DOORS WITH VHB FIXING 414

Material: Aluminium

Finish: /88 /91 /97

Other finishes available on demand

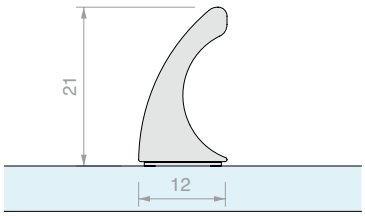

Art.	Length	Qty
MAN414V250	**250** mm	1 Pc
MAN414V350	**350** mm	1 Pc

HANDLE FOR SLIDING DOORS WITH VHB FIXING 404

Material: Aluminium

Finish: /91 /97 /R2

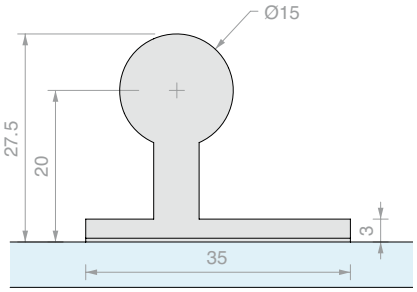

Art.	Length	Qty
MAN404V160	**230** mm	1 Pc
MAN404V320	**380** mm	1 Pc
MAN404V448	**530** mm	1 Pc

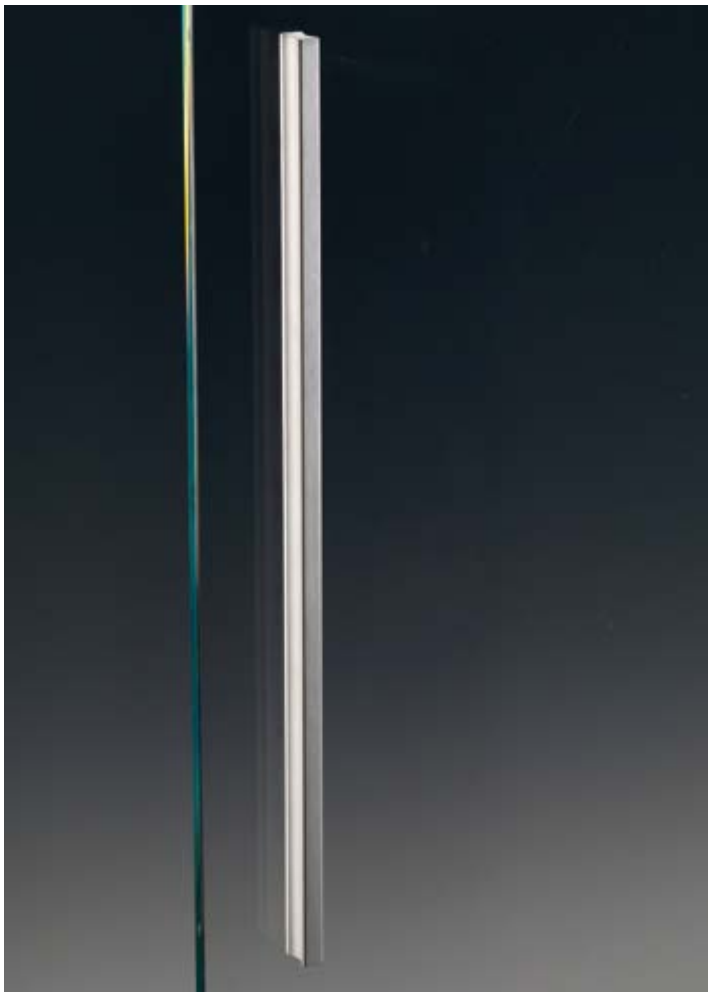

HANDLE FOR SLIDING DOORS WITH VHB FIXING 408

Material: Aluminium

Finish: /91 /97 /R2

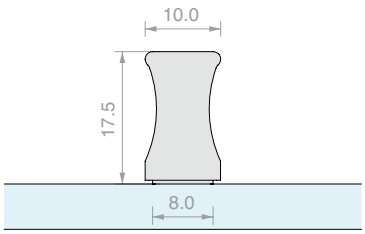

Art.	Length	Qty
MAN408V160	**260** mm	1 Pc
MAN408V320	**410** mm	1 Pc
MAN408V448	**560** mm	1 Pc

HANDLE FOR SLIDING DOORS WITH VHB FIXING 500

Material: Aluminium

Finish: /88 /91 /97 /R2

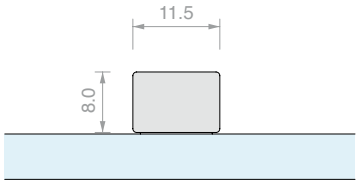

Art.	Length	Qty
MAN500V150	**150** mm	1 Pc

HANDLE FOR SLIDING DOORS WITH VBH FIXING HAND10057

Material: AISI 304 steel

Finish: /8 /15

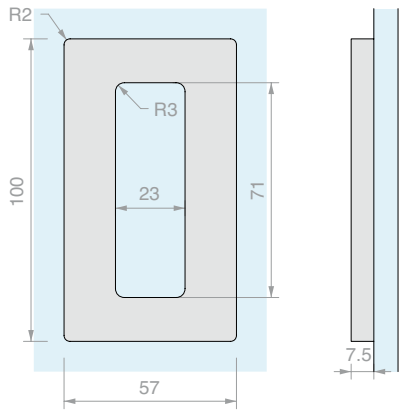

Art.	Qty
HAND10057VHB	1 Pc

HANDLE FOR SLIDING DOORS WITH VBH FIXING HAND12062

Material: AISI 304 steel

Finish: /8 /15

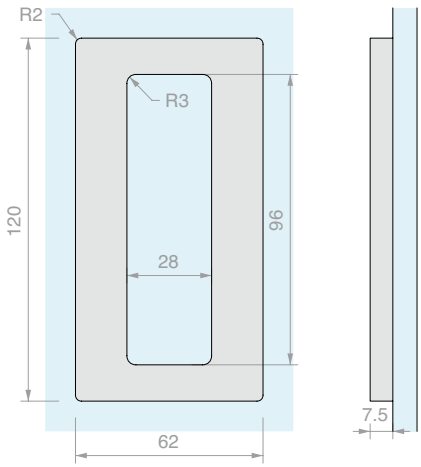

Art.	Qty
HAND12062VHB	1 Pc

HANDLE FOR SLIDING DOORS WITH VBH FIXING HAND6640

Material: Aluminium

Finish: /1 /6 /88 /91 /97

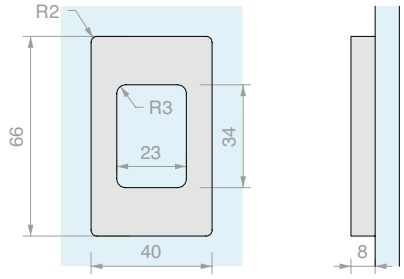

Art.	Qty
HAND6640VHB	1 Pc

HANDLE FOR SLIDING DOORS WITH VBH FIXING HAND10052

Material: Aluminium

Finish: /1 /6 /88 /91 /97

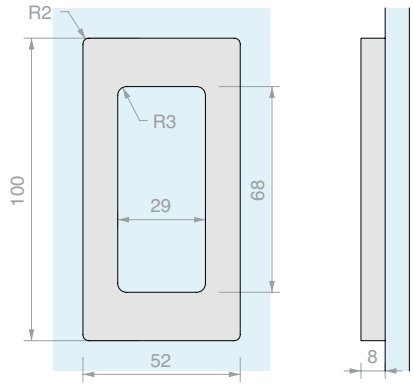

Art.	Qty
HAND10052VHB	1 Pc

HANDLE FOR SLIDING DOORS WITH VBH FIXING HAND13040

Material: Aluminium

Finish: /1 /6 /88 /91 /97

/R6 /R13

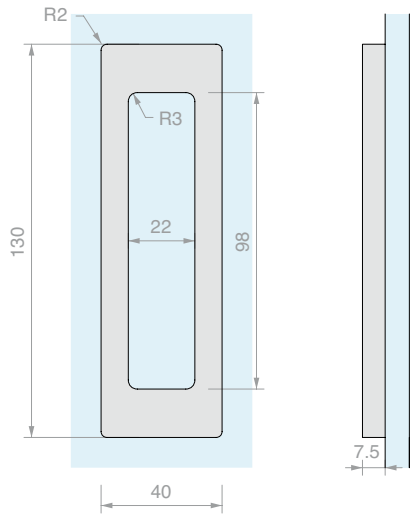

Art.	Qty
HAND13040VHB	1 Pc

SQUARE HANDLE FOR SLIDING DOORS WITH VHB FIXING

Material: AISI 304 steel

Finish: /9

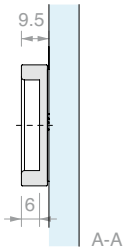

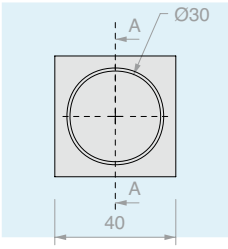

Art.	Qty
MABDQ40	1 Pc

ROUND HANDLE FOR SLIDING DOORS WITH VHB FIXING

Material: AISI 304 steel

Finish: /9

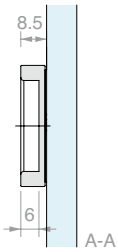

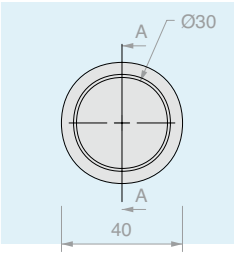

Art.	Qty
MABDT40	1 Pc

MOUNTING JIG MABDQ40-MABDT40-MAUVQ40-MAUVT40

Material: AISI 304 steel

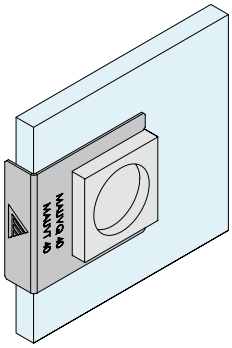

Art.	Qty
FXGAB10	1 Pc

PAIR OF SQUARE HANDLES

Material: AISI 304 steel

Finish: /9

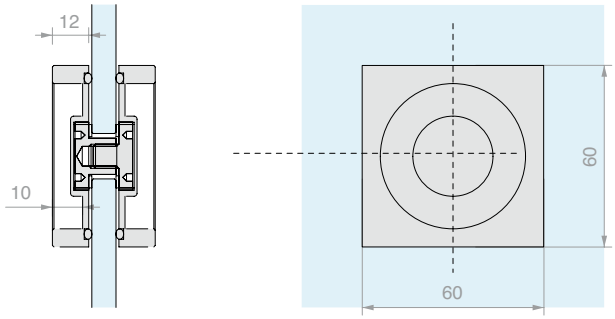

Art.	Hole	For glass	Qty
MAQ60	**Ø14** mm	From **8** to **12** mm	1 Pc

PAIR OF ROUND HANDLES

Material: AISI 304 steel

Finish: /9

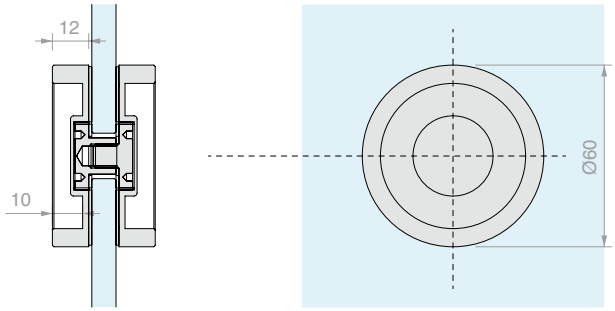

Art.	Hole	For glass	Qty
MAT60	**Ø14** mm	From **8** to **12** mm	1 Pc

PAIR OF SQUARE HANDLES

Material: AISI 304 steel

Finish: /9

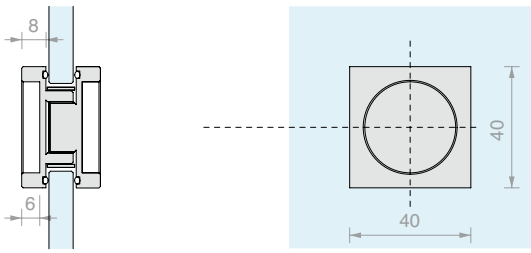

Art.	Hole	For glass	Qty
MAQ40	**Ø30** mm	From **8** to **12** mm	1 Pc

PAIR OF ROUND HANDLES

Material: AISI 304 steel

Finish: /9

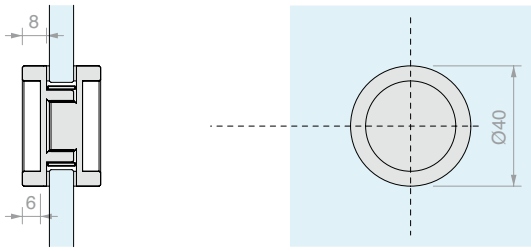

Art.	Hole	For glass	Qty
MAT40	**Ø30** mm	From **8** to **12** mm	1 Pc

PAIR OF ROUND OPEN HANDLES 4314

Material: AISI 304 steel

Finish: /8 /15

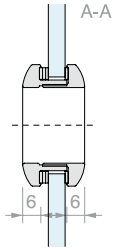

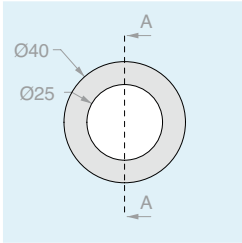

Art.	Hole	For glass	Qty
MAT4314	**Ø32** mm	From **6** to **10** mm	1 Pc

PAIR OF ROUND CLOSED HANDLES 4320

Material: AISI 304 steel

Finish: /8 /15

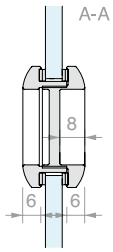

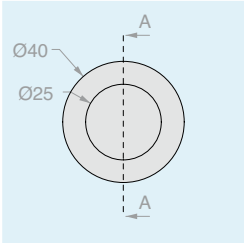

Art.	Hole	For glass	Qty
MAT4320	**Ø32** mm	From **6** to **10** mm	1 Pc

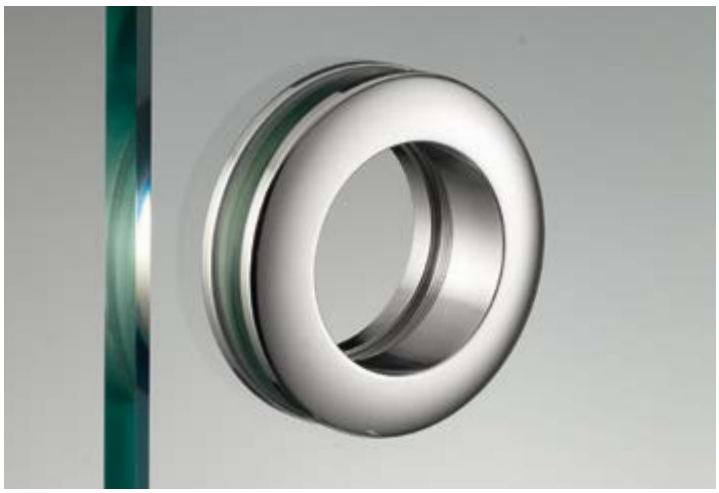

PAIR OF ROUND OPEN HANDLES 6314

Material: AISI 304 steel

Finish: /8 /15

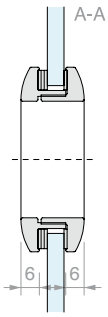

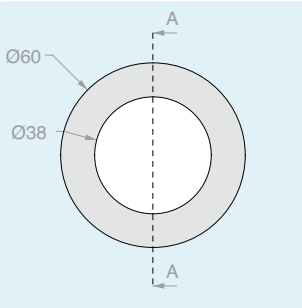

Art.	Hole	For glass	Qty
MAT6314	**Ø48** mm	From **8** to **10** mm	1 Pc

PAIR OF ROUND CLOSED HANDLES 6320

Material: AISI 304 steel

Finish: /8 /15

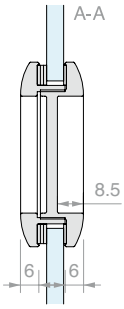

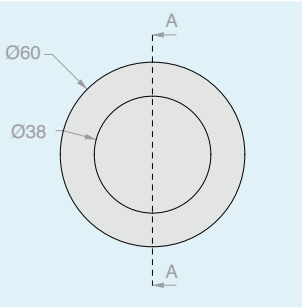

Art.	Hole	For glass	Qty
MAT6320	**Ø48** mm	From **8** to **10** mm	1 Pc

PAIR OF ROUND OPEN HANDLES 8314

Material: AISI 304 steel

Finish: /8 /15

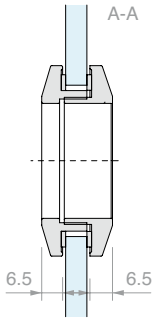

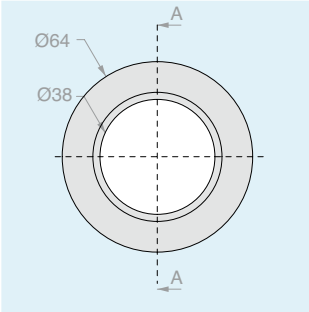

Art.	Hole	For glass	Qty
MAT8314	**Ø50** mm	From **8** to **10** mm	1 Pc

PAIR OF ROUND CLOSED HANDLES 8320

Material: AISI 304 steel

Finish: /8 /15

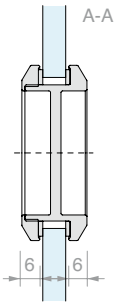

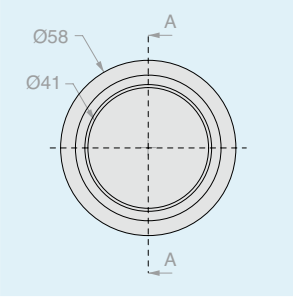

Art.	Hole	For glass	Qty
MAT8320	**Ø50** mm	From **8** to **10** mm	1 Pc

PAIR OF ROUND CLOSED HANDLES 6036

Material: Aluminium

Finish: /88 /91 /97

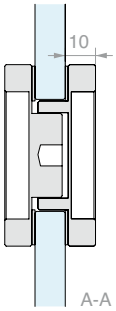

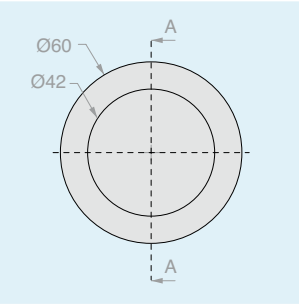

Art.	Hole	For glass	Qty
MAL6036	**Ø38** mm	From **8** to **12** mm	1 Pc

PAIR OF ROUND CLOSED HANDLES 6050

Material: Aluminium

Finish: /88 /91 /97

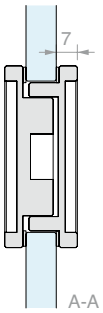

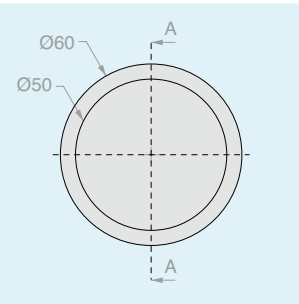

Art.	Hole	For glass	Qty
MAL6050	**Ø51** mm	From **8** to **12** mm	1 Pc

PAIR OF ROUND OPEN HANDLES 30A

Material: Brass

Finish: /1 /2 /3

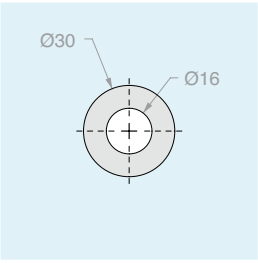

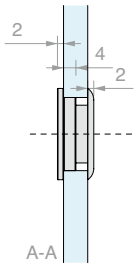

Art.	Hole	For glass	Qty
MAN30A	**Ø26** mm	From **4** to **6** mm	1 Pc

PAIR OF ROUND CLOSED HANDLES 30C

Material: Brass

Finish: /1 /2 /3

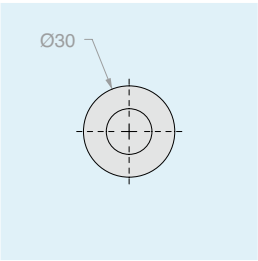

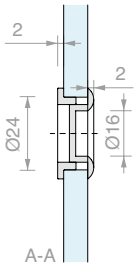

Art.	Hole	For glass	Qty
MAN30C	**Ø26** mm	From **4** to **6** mm	1 Pc

PAIR OF ROUND OPEN HANDLES 40A

Material: Brass

Finish: /1 /2 /3

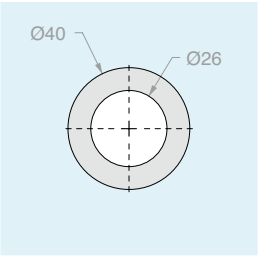

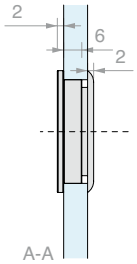

Art.	Hole	For glass	Qty
MAN40A	**Ø36** mm	From **8** to **10** mm	1 Pc

PAIR OF ROUND CLOSED HANDLES 40C

Material: Brass

Finish: /1 /2 /3

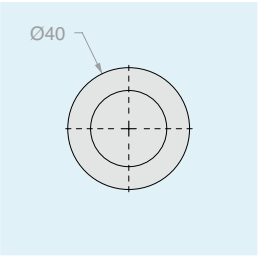

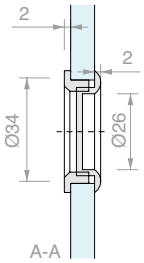

Art.	Hole	For glass	Qty
MAN40C	**Ø36** mm	From **8** to **10** mm	1 Pc

PAIR OF ROUND OPEN HANDLES 60A

Material: Brass

Finish: /1 /2 /92

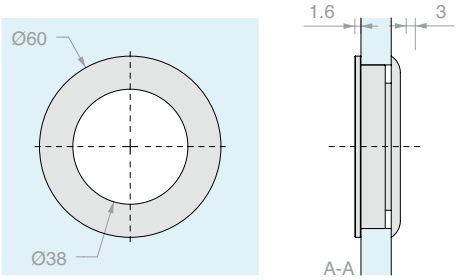

Art.	Hole	For glass	Qty
MAN60A	**Ø55** mm	From **8** to **12** mm	1 Pc

PAIR OF ROUND CLOSED HANDLES 60C

Material: Brass

Finish: /1 /2 /92

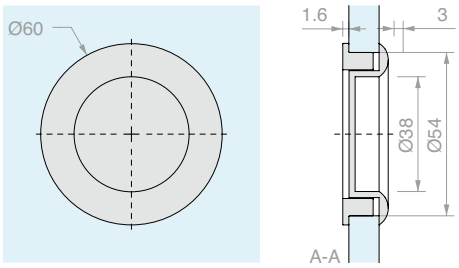

Art.	Hole	For glass	Qty
MAN60C	**Ø55** mm	From **8** to **12** mm	1 Pc

PAIR OF ROUND HANDLES WITH DOOR KNOB

Material: Brass

Finish: /1 /3

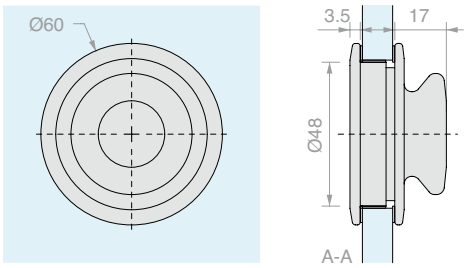

Art.	Hole	For glass	Qty
MSC9	**Ø50** mm	From **8** to **12** mm	1 Pc

PAIR OF HANDLES FOR SLIDING DOORS HAND10057

Material: AISI 304 steel

Finish: /8 /15

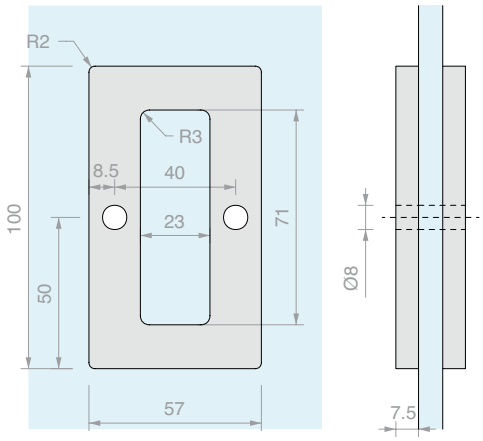

Art.	For glass	Qty
HAND10057	From **8** to **12** mm	1 Pc

PAIR OF HANDLES FOR SLIDING DOORS HAND12062

Material: AISI 304 steel

Finish: /8 /15

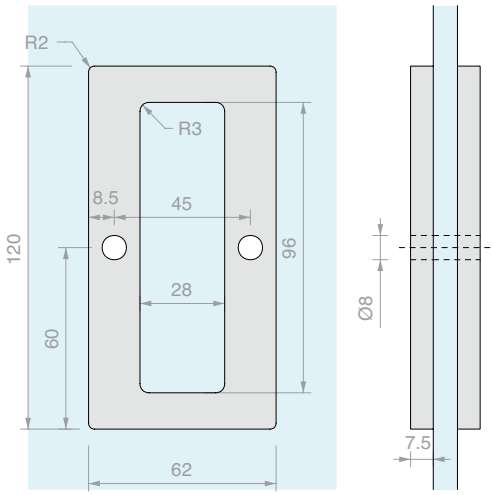

Art.	For glass	Qty
HAND12062	From **8** to **12** mm	1 Pc

PAIR OF HANDLES FOR SLIDING DOORS HAND6640

Material: Aluminium

Finish: /1 /6 /88 /91 /97

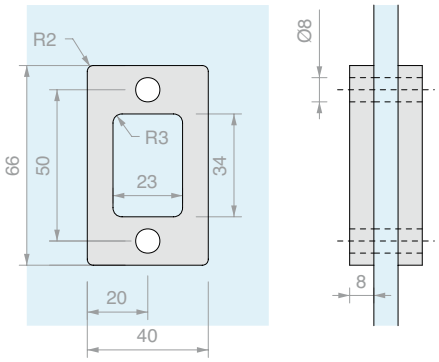

Art.	For glass	Qty
HAND6640	From **8** to **12** mm	1 Pc

PAIR OF HANDLES FOR SLIDING DOORS HAND10052

Material: Aluminium

Finish: /1 /6 /88 /91 /97

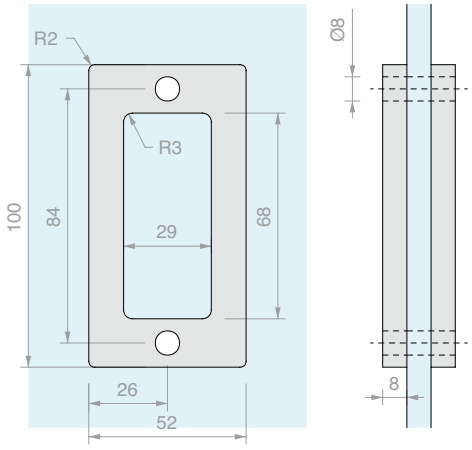

Art.	For glass	Qty
HAND10052	From **8** to **12** mm	1 Pc

PAIR OF HANDLES FOR SLIDING DOORS HAND13040

Material: Aluminium

Finish: /1 /6 /88 /91 /97

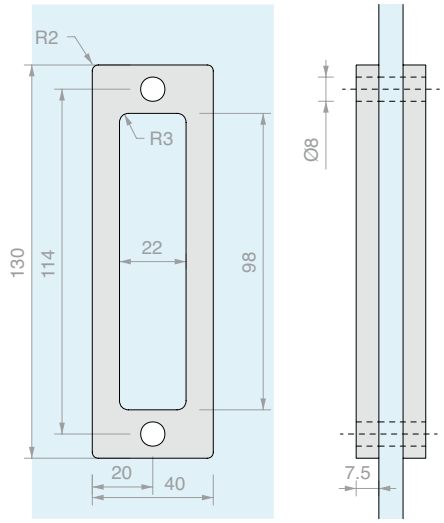

Art.	For glass	Qty
HAND13040	From **8** to **12** mm	1 Pc

PAIR OF HANDLES FOR POCKET SLIDING DOORS

Material: Brass

Finish: /1 /24 /45

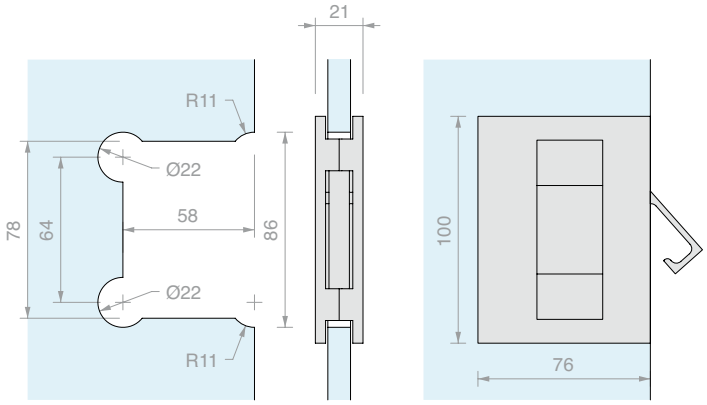

Art.	For glass	Qty
MSC7	From **8** to **10** mm	1 Pc

PAIR OF HANDLES FOR SLIDING DOORS

Material: Brass

Finish: /1 /24 /45

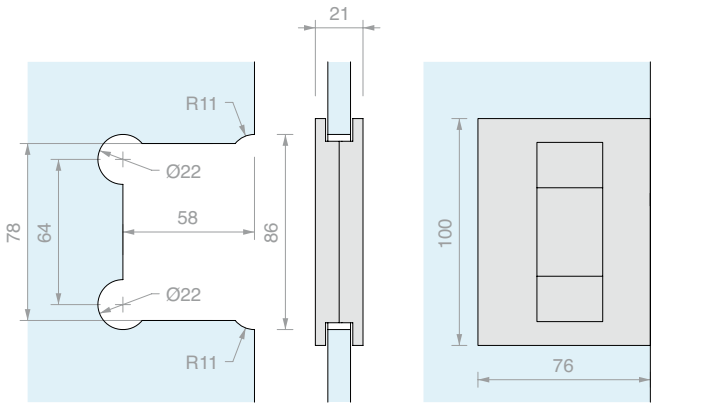

Art.	For glass	Qty
MSC5	From **8** to **10** mm	1 Pc

PAIR OF HANDLES FOR POCKET SLIDING DOORS WITH PROTRUSION FOR WALL CHANNEL

Material: Brass

Finish: /1 /24 /45

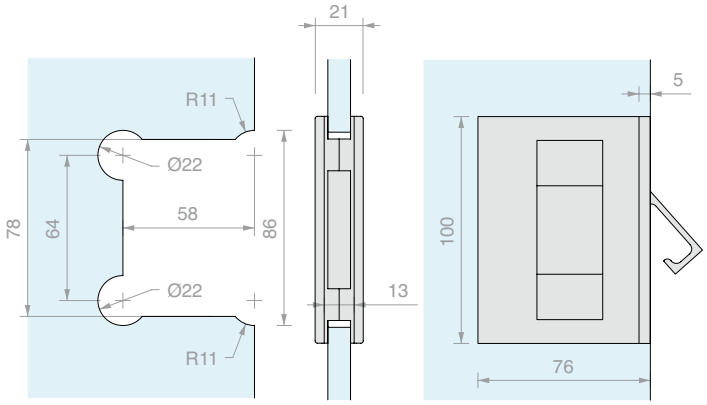

Art.	For glass	Qty
MSC8	From **8** to **10** mm	1 Pc

PAIR OF HANDLES FOR SLIDING DOORS WITH PROTRUSION FOR WALL CHANNEL

Material: Brass

Finish: /1 /24 /45

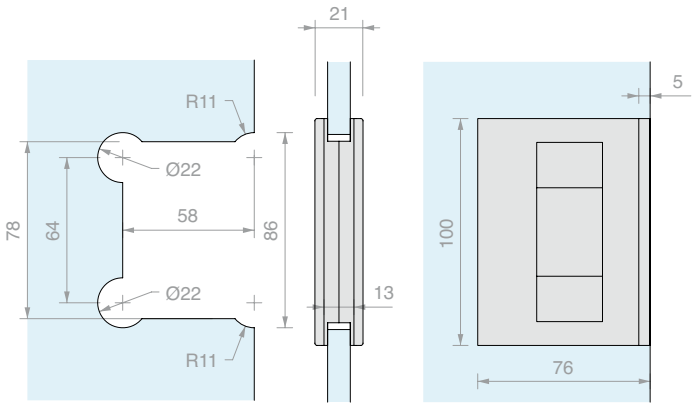

Art.	For glass	Qty
MSC6	From **8** to **10** mm	1 Pc

PAIR OF SQUARE HANDLES

Material: Brass

Recommended glass hole minimum size Ø8 mm

Finish: /1 /24

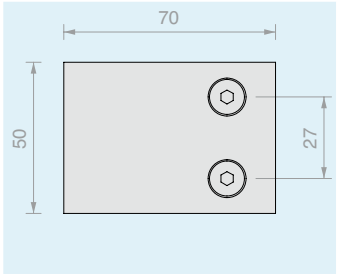

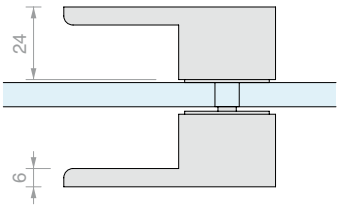

Art.	For glass	Qty
MNQ2470	From **8** to **12** mm	1 Pc

PAIR OF HANDLES 2030

Material: Brass

Recommended glass hole minimum size Ø8 mm

Finish: /1 /24

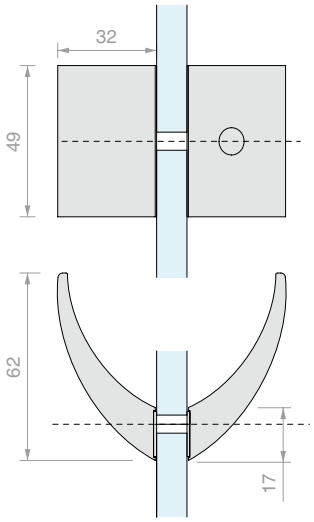

Art.	For glass	Qty
MN2030	From **6** to **8** mm	1 Pc

PAIR OF KNOBS WITH GRIP

Material: AISI 304 steel

Recommended glass hole minimum size Ø6 mm

Finish: /9

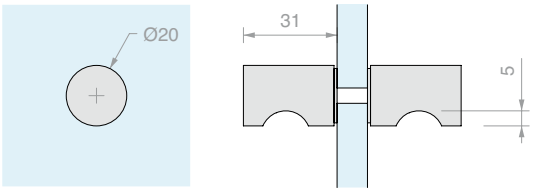

Art.	For glass	Qty
POM1ACC20	From **5** to **15** mm	1 Pc

PAIR OF KNOBS WITH GRIP

Material: AISI 304 steel

Recommended glass hole minimum size Ø6 mm

Finish: /9

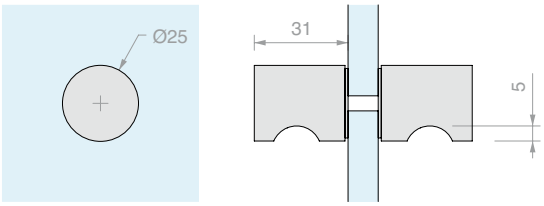

Art.	For glass	Qty
POM1ACC25	From **5** to **15** mm	1 Pc

PAIR OF DOOR KNOBS WITH GRIP SOLEIL ROYAL SERIES

Material: AISI 304 steel

Recommended glass hole minimum size Ø12 mm

Finish: /9

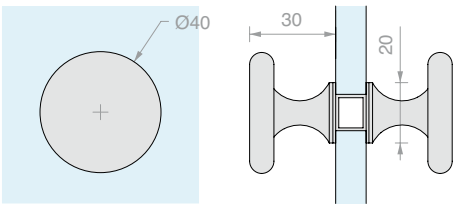

Art.	For glass	Qty
POM8	From **6** to **10** mm	1 Pc

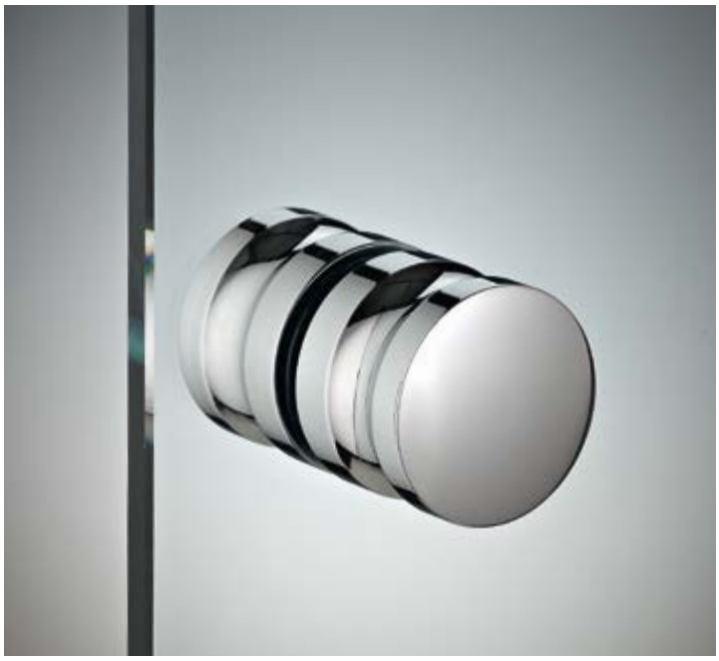

PAIR OF KNOBS WITH GRIP

Material: Brass

Recommended glass hole minimum size Ø8 mm

Finish: /1 /3

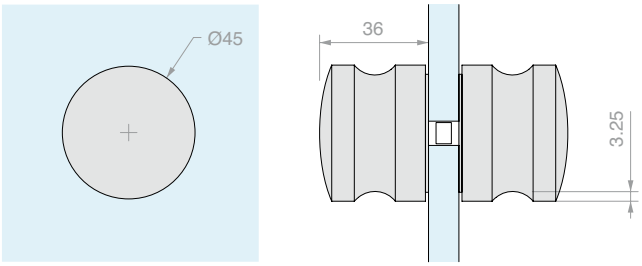

Art.	For glass	Qty
POM4535	From **8** to **13.5**mm	1 Pc

PAIR OF KNOBS WITH GRIP VETCIL35

Material: brass

Recommended glass hole minimum size Ø10 mm

Finish: /1 /2 /3

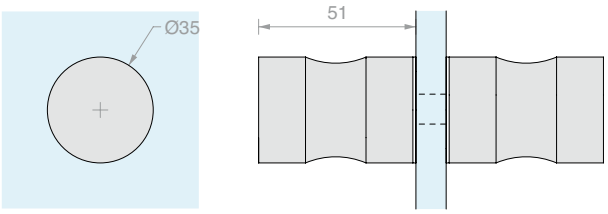

Art.	For glass	Qty
VETCIL35	From **8** to **12** mm	1 Pc

PAIR OF KNOBS WITH GRIP SP255

Material: brass

Recommended glass hole minimum size Ø8 mm

Finish: /1 /2 /4 /24 /R2

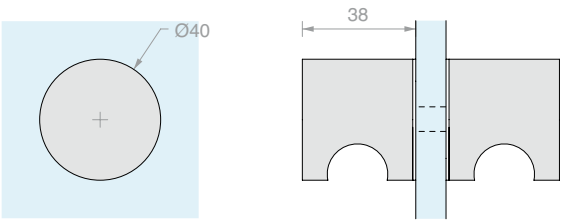

Art.	For glass	Qty
SP255	From **8** to **14** mm	1 Pc

PAIR OF KNOBS WITH GRIP SP2255

Material: brass

Recommended glass hole minimum size Ø8 mm

Finish: /1 /2 /4 /24 /R2

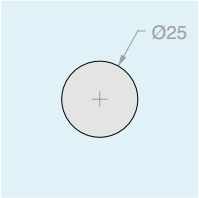

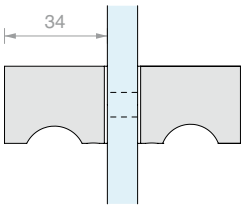

Art.	For glass	Qty
SP2255	From **6** to **12** mm	1 Pc

PAIR OF KNURLED KNOBS WITH GRIP SP2255GD

Material: brass

Recommended glass hole minimum size Ø8 mm

Finish: /1 /2 /4 /24 /R2

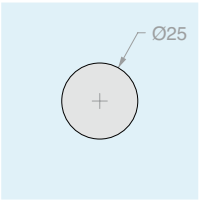

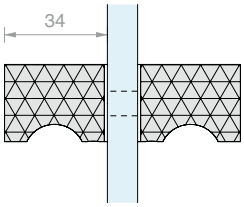

Art.	For glass	Qty
SP2255GD	From **6** to **12** mm	1 Pc

PAIR OF SQUARE KNOBS WITH GRIP

Material: brass

Recommended glass hole minimum size Ø12 mm

Finish: /1 /2 /4 /24 /R2

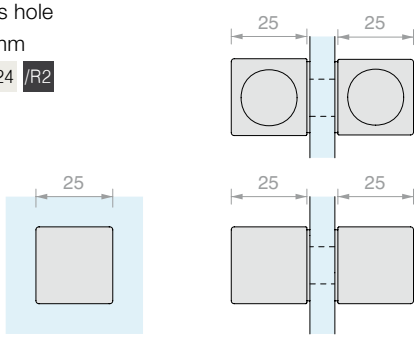

Art.	For glass	Qty
DQTS2525	From **8** to **12** mm	1 Pc

PAIR OF SQUARE KNOBS

Material: brass

Recommended glass hole minimum size Ø8 mm

Finish: /1 /2 /3 /4 /R2

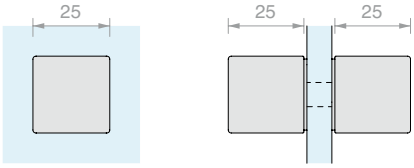

Art.	For glass	Qty
DQP2525	From **8** to **15** mm	1 Pc

PAIR OF LONG KNOBS

Material: brass

Recommended glass hole minimum size Ø8 mm

Finish: /1 /2 /3 /4 /R2

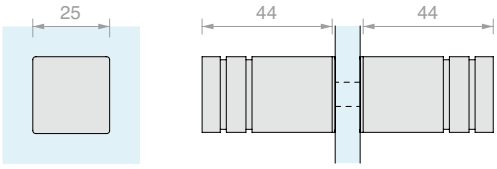

Art.	For glass	Qty
POM2525	From **8** to **15** mm	1 Pc

PAIR OF DOOR KNOBS

Material: Brass

Recommended glass hole minimum size Ø8 mm

Finish: /1 /3

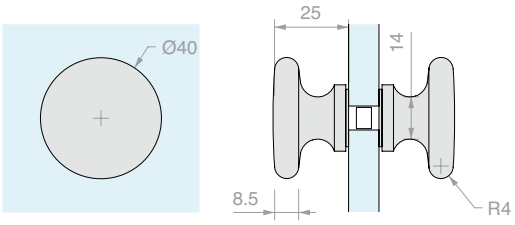

Art.	For glass thickness	Qty
POM45PT	From **8** to **15** mm	1 Pc

BALL DOOR KNOBS

Material: Brass

Recommended glass hole minimum size Ø6 mm

Finish: /1 /2 /3

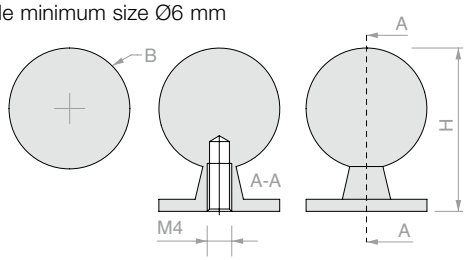

Art.	B	H	For glass	Qty
POM01	**Ø20** mm	**27** mm	From **6** to **15** mm	1 Pc
POM02	**Ø25** mm	**33** mm	From **6** to **15** mm	1 Pc
POM03	**Ø30** mm	**39** mm	From **6** to **19** mm	1 Pc
POM04	**Ø35** mm	**45** mm	From **6** to **19** mm	1 Pc

PAIR OF DOOR KNOBS WITH PVC HEAD

Material: Brass and PVC

Recommended glass hole minimum size Ø10 mm

Finish: /1 /3

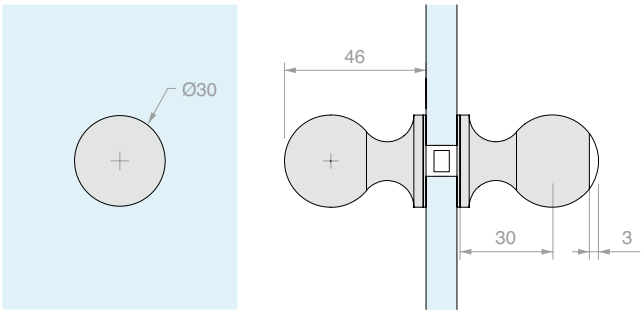

Art.	For glass	Qty
POMPVC	From **6** to **15** mm	1 Pc

PAIR OF COMPRESSED GLASS DOOR KNOBS

Material: Glass stuck on brass base

Recommended glass hole minimum size Ø10 mm

Glass colour: satin

Base finish: /1 /2 /3

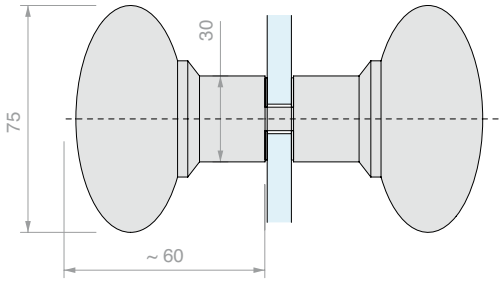

Art.	For glass	Qty
POM75	From **8** to **12** mm	1 Pc

PAIR OF COMPRESSED GLASS BALL DOOR KNOBS

Material: Glass stuck on brass base

Recommended glass hole minimum size Ø10 mm

Base finish: /1 /2 /3

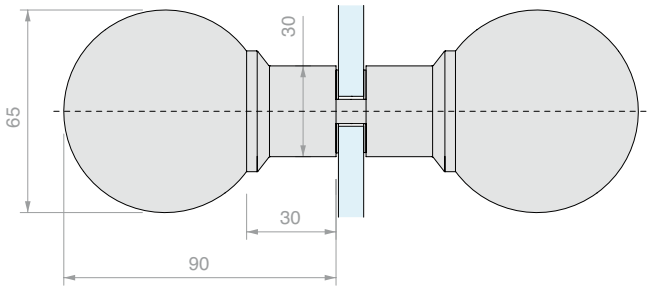

Art.	For glass	Glass	Qty
POM65T	From **8** to **12** mm	Transparent	1 Pc
POM65S	From **8** to **12** mm	Brushed	1 Pc

GLASS BALL DOOR KNOBS ARIUS SERIES

Material: Glass stuck on brass base
Recommended glass hole minimum size Ø8 mm
Glass colour: transparent
Base finish: /1 /2

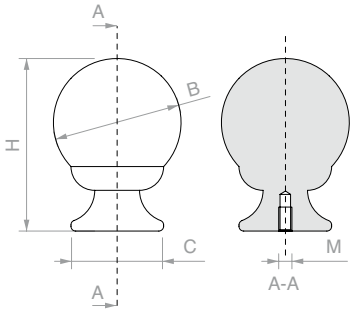

Art.	B	C	H	M	Qty
POM90540T	**Ø40** mm	**29** mm	**57** mm	**M4**	1 Pc
POM90555T	**Ø55** mm	**41** mm	**78** mm	**M6**	1 Pc

PAIR OF COMPRESSED GLASS DOOR KNOBS

Material: Glass stuck on brass base
Recommended glass hole minimum size Ø10 mm
Base finish: /1 /2 /3

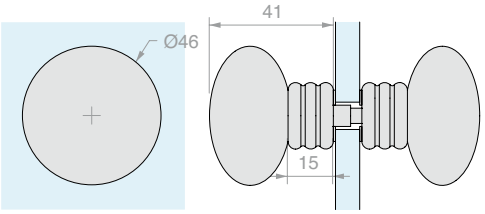

Art.	For glass	Glass	Qty
POM45T	From **5** to **8** mm	Transparent	1 Pc
POM45S	From **5** to **8** mm	Satin	1 Pc

PAIR OF COMPRESSED GLASS BALL DOOR KNOBS

Material: Glass stuck on brass base
Recommended glass hole minimum size Ø10 mm
Base finish: /1 /2 /3

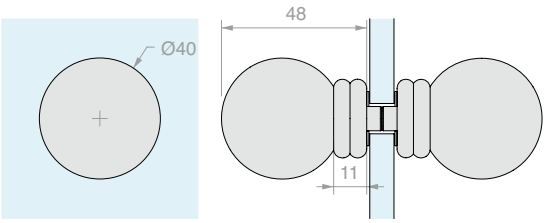

Art.	For glass	Glass	Qty
POMBD40T	From **8** to **10** mm	Transparent	1 Pc
POMBD40S	From **8** to **10** mm	Satin	1 Pc

GLASS BALL DOOR KNOBS

Material: Glass stuck on brass base
Recommended glass hole minimum size Ø6 mm
Base finish: /1 /2 /3

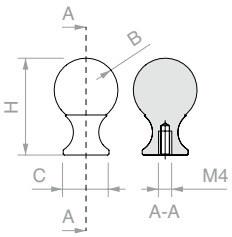

Art.	B	C`	H	Glass	Qty
POMVE20T	**Ø20** mm	**Ø16** mm	**32** mm	Transparent	1 Pc
POMVE20S	**Ø20** mm	**Ø16** mm	**32** mm	Satin	1 Pc
POMVE25T	**Ø25** mm	**Ø18** mm	**38** mm	Transparent	1 Pc
POMVE25S	**Ø25** mm	**Ø18** mm	**38** mm	Satin	1 Pc
POMVE30T	**Ø30** mm	**Ø18** mm	**42** mm	Transparent	1 Pc
POMVE30S	**Ø30** mm	**Ø18** mm	**42** mm	Satin	1 Pc

ANALYTICAL INDEX VOLUME 3

Art.	Page
042,3005,100	255
042,3005,200	255
042,3005,300	255
042,3005,400	255
042,3005,600	255
042,3102,071	79
042,3102,072	79
042,3114,071	79
053.3071.300	307
053.3072.100	307
053.3072.200	307
053.3072.300	307
053.3072.600	307
053.3075.300	308
053.3324.200	306
053.3324.300	306
053.3324.600	306
053.3326.200	306
053.3326.300	306
053.3326.400	306
053.3326.600	306
053.3338.200	307
053.3338.300	307
053.3338.400	307
053.3338.600	307
053.3342.200	306
053.3342.300	306
053.3342.600	306
053.3361.071	308
053.3361.072	308
057,3030,071	259
057,3073,071	79
057,3073,072	78
057,3078,002	257
057,3080,001	322
057,3080,002	322
057,3084,200	254
057,3084,300	254
057,3084,400	254
057,3084,600	254
057,3085,200	255
057,3085,300	255

Art.	Page
057,3085,400	255
057,3085,600	255
057,3099,071	259
057,3114,071	78
057.3010.001	382
057.3030.071	337
057.3114.071	209
057.3159.071	309
057.3159.072	309
057.3159.073	309
0573.030.071	355
AP1203BOKS	537
AP1203BOMG	537
AP1203BOPA	536
AP1203BORH	536
AP1203BOST	536
AP2203BOKS	535
AP2203BOMG	535
AP2203BOPA	534
AP2203BORH	534
AP2203BOST	534
APHAFKRC	543
APHAFKRH	543
APHAFKSC	541
APHAFKSH	541
APHANDGD	548
APHANDRC	542
APHANDRH	542
APHANDSC	540
APHANDSH	540
APHANDTC	548
APRO1008	547
APRO1010	547
APRO1012	547
APRO1013	547
APRO1020	549
APRO1050	549
APRO4008	547
APRO4010	547
APRO4012	547
APRO4013	547
APRO4040	549

Art.	Page
APRO4080	549
APRO4403BORH	544
APRO4406BORH	544
APRO4503BORH	545
APRO4506BORH	545
APRO4603BORH	546
APRO4606BORH	546
APROIN1203H	538
APROIN1203HM	538
APROIN17M	539
APROIN2203H	538
APROIN2203HM	538
CAL005	555
CAL006	555
CAL007	555
CALMU30	555
CARVIT8X40-A2	78
CARVIT8X50-A2	78
CER148	518
CER148AL	521
CER148ALSQ	521
CER160	518
CER175	518
CER4AL	520
CER4ALSQ	520
CERMGLISS	524
CERPOS162	122
CERPOS170ALL	210
CERPOS170COV	210
CERPOS170SYNC	210
CERPOS514	211
CERPOS514-C	211
CERPOS514-T	211
CERPT80	493
CERPT80SQ	492
CGS1620DX	482
CGS1620SX	482
CGS1640DX	483
CGS1640SX	483
CHN28	318
CHN31	318
CISA2227D	539

Art.	Page
CISA2227U	539
CL95	321
CLH12	319
CLHM14	319
CLM11	320
CLPN	321
CLS10	320
DQC63	488
DQC65	488
DQMATIQUE3	513
DQMATIQUE44	513
DQMATIQUE480	514
DQMATIQUE66	513
DQMATIQUE680	514
DQP2525	629
DQS11	313
DQS13	312
DQS15	311
DQS21	313
DQS23	312
DQS25	311
DQS37	314
DQTS2525	628
ELEK100	409
ELEK218	408
ELEK290	409
ELEK390	410
ELEK436	408
ELEKTRA100	409
ELEKTRA218	408
ELEKTRA290	409
ELEKTRA390	410
ELEKTRA436	408
FA100	522
FA180	523
FA50	522
FA580	523
FH300C	517
FIXBORK1	410
FIXGHIERA10	410
FIXGHIERA8	410
FOP10.30	125

Art.	Page
FOP15.30	125
FOP20.30	125
FOU1011.30	125
FOU1013.30	74
FPT01	554
FPT03	554
FPT07	554
FPT09	555
FPT11	555
FPT21	554
FR300R	517
FXGAB10	614
GARDAML	475
GARDATD	475
GB01.30	77
GF100	467
GF150	470
GF150F	470
GF200	467
GF210	468
GF400	468
GF600	470
GF700	470
GK200	472
GK800	473
GL10	477
GL200P	472
GL200S	472
GL200SU	472
GL25	477
GL7100	474
GL7200	474
GL7300	474
GL7311	490
GL7433	474
GL7439	474
GL800	473
GL8815	476
GL8819	476
GL8823	476
GL8824	476
GLM20002MUR	330

Art.	Page
GLM20002SOF	332
GLM20002VET	331
GLM20003MUR	330
GLM20003SOF	332
GLM20003VET	331
GLM20004MUR	330
GLM20004SOF	332
GLM20004VET	331
GLM2106	335
GLM2500	334
GLM2550	334
GLM3000	344
GLM30002MUR	342
GLM30002VET	342
GLM30003MUR	342
GLM30003VET	342
GLM30004MUR	342
GLM30004VET	342
GLM3020	354
GLM3023	345
GLM3050	344
GLM32002PAR	350
GLM32002PLA	352
GLM32002VET	351
GLM32003PAR	350
GLM32003PLA	352
GLM32003VET	351
GLM32004PAR	350
GLM32004PLA	352
GLM32004VET	351
GLM33M5	335
GLM33VT	335
GLM6500	372
GLM6550	372
GLM7000	353
GLM8300A	335
GLM8500	363
GLMAN	353
GLMATM	363
GLMATS	364
GLMATV	364
GLMBDLN15	344

Art.	Page
GLMBLC01	336
GLMBLCDX	336
GLMBLCSX	336
GLMBRM	344
GLMBRV	345
GLMBST	363
GLMBST200	363
GLMBST300	363
GLMBST400	363
GLMCAV2	334
GLMCAV3	334
GLMCAV4	334
GLMDSTP	345
GLMDSTV	345
GLMFERM	364
GLMFORO	344
GLMGREG	365
GLMMOLL	336
GLMRC	363
GLMRCT	353
GLMRL	363
GLMSST	354
GLMSTOPDX	365
GLMSTOPSX	365
GLMTND20	344
GLMTND30	344
GLMTND40	344
GM65002MUR	370
GM65002VET	371
GM65003MUR	370
GM65003VET	371
GM65004MUR	370
GM65004VET	371
GM85002MUR	360
GM85002PLA	362
GM85002VET	361
GM85003MUR	360
GM85003PLA	362
GM85003VET	361
GM85004MUR	360
GM85004PLA	362
GM85004VET	361

Art.	Page
GNW20	381
GNW3500	381
GNW35002	380
GNW35003	380
GNW35004	380
GNW3550	381
GP77	77
GS01100	559
GS01875	559
GSB12	322
GSB831	323
GSL3000	556
GSL812	557
GSLS217	323
GSLSVL	322
GSP03100	561
GTUP2	121
GTUP2G	121
GTUP2N	121
GTUP3	121
GTUP3G	121
GTUP3N	121
GTUP4	121
GTUP4G	121
GTUP4N	121
GTUP5	121
GTUP5G	121
GTUP5N	121
GTUP6	121
GTUP6G	121
GTUP6N	121
GZ-TS071924	501
GZ-TS3000V	501
GZ-TS500NV110	498
GZ-TS500NV90	498
GZ-TS550NV	500
GZ-TSADT	499
HAND10052	620
HAND10052VHB	612
HAND10057	620
HAND10057VHB	612
HAND12062	620

Art.	Page
HAND12062VHB	612
HAND13040	620
HAND13040VHB	612
HAND32140VHB	81
HAND6640	620
HAND6640VHB	612
HD3301	486
HD3302D	486
HD3302F	486
HD3303	461
HD3304	490
HD3305D	488
HD3305P	488
HD3305U	488
HD3306	490
HD3307DX	487
HD3307SX	487
HD3308DX	487
HD3308-SLIDER	491
HD3308SX	487
HD3309	489
HD3310	489
HS1010PB	481
HS1010PS	481
HS1010SB	479
HS1010SPL	485
HS1010SS	479
HS1010SSB	480
HS1010SSS	480
HS66100	459
HS66200	459
HS66INF	460
HS66POZ	461
HS66POZSL	461
HS66SAFE	461
HS66SUP	460
IBT100	454
IBT10015	454
IBT10030	454
IBT90145	454
IBT9014515	454
IBT9014530	454

Art.	Page
IBTCUT	455
IMB1004SKITD	446
IMB1004SKITSC	446
IMB1004SKITU	446
IMB1454SKITD	448
IMB1454SKITSC	448
IMB1454SKITU	448
IMB2544	444
IMB254415	444
IMB254430	444
IMB2550SKITD	432
IMB2550SKITSC	432
IMB2550SKITU	432
IMB25KIT	442
IMB43148KITD	438
IMB43148KITSC	438
IMB43148KITU	438
IMB4344	444
IMB434415	444
IMB434430	444
IMB4350KITD	436
IMB4350KITSC	436
IMB4350KITU	436
IMB43KIT	443
IMBCUT	445
IMBG	444
IMBKIT100-8	452
IMBKIT8	452
LAVCER	431
LAVPRO2	431
LAVPRO3	431
LAVSER	431
LM0023C.300	74
LM0023C.400	74
LM0040C.100	72
LM0040C.150	72
LM0040C.300	72
LM0055C.200	74
LM0055C.300	74
LM0055C.400	74
LM0055C.600	74
LM0064CP.200	120

Art.	Page
LM0064CP.300	120
LM0064CP.400	120
LM0064CP.600	120
LM0075C.200	206
LM0075C.300	206
LM0075C.400	206
LM0075C.600	206
LM0100C.200	206
LM0100C.300	206
LM0100C.400	206
LM0100C.600	206
LM04855.200	70
LM04855.300	70
LM04855.400	70
LM04855.600	70
LM10022TP33	208
LM10042TP33	208
LM10044TP33	208
LM10059TP33	208
LM10090TP33	208
LM128	604
LM17019TP10	309
LM21.200	70
LM21.300	70
LM21.400	70
LM21.600	70
LM224	604
LM25040.300	73
LM25040.400	73
LM26075.200	205
LM26075.300	205
LM26075.400	205
LM26075.600	205
LM26100.200	205
LM26100.300	205
LM26100.400	205
LM26100.600	205
LM2V080.200	204
LM2V080.300	204
LM2V080.400	204
LM2V080.600	204
LM2V082.200	70
LM2V082.300	70
LM2V082.400	70
LM2V082.600	70
LM31042TP32	208
LM31044TP32	208
LM3110.200	204
LM3110.300	204
LM3110.400	204
LM3110.600	204
LM3120.200	206
LM3120.300	206
LM3120.400	206
LM3120.600	206
LM320	604
LM32040.100	73
LM32040.150	73
LM32040.300	73
LM36040.100	72
LM36040.150	72
LM36040.300	72
LM38045.100	71
LM38045.150	71
LM38045.300	71
LM38065.100	71
LM38065.150	71
LM38065.300	71
LM3V112.200	205
LM3V112.300	205
LM3V112.400	205
LM3V112.600	205
LM3V129.200	71
LM3V129.300	71
LM3V129.400	71
LM3V129.600	71
LM40045.300	72
LM40045.400	72
LM48035TP10	309
LM54040TP32	75
LM54049TP32	75
LM5864P.200	120
LM5864P.300	120
LM5864P.400	120
LM5864P.600	120
LM5864S.200	120
LM5864S.300	120
LM5864S.400	120
LM5864S.600	120
LM600025DE	494
LM600025FR	494
LM600025IT	494
LM6010525DE	494
LM6010525FR	494
LM6010525IT	494
LM6010533DE	494
LM6010533FR	494
LM6010533IT	494
LM609020DE	494
LM609020FR	494
LM609020IT	494
LM609025DE	494
LM609025FR	494
LM609025IT	494
LM609033DE	494
LM609033FR	494
LM609033IT	494
LM63061TP33	121
LM64051TP33	76
LM64055TP33	76
LM64098TP33	76
LM64145TP33	77
LM660040DE	495
LM660040FR	495
LM660040IT	495
LM669020DE	495
LM669020FR	495
LM669020IT	495
LM669030DE	495
LM669030FR	495
LM669030IT	495
LM669040DE	495
LM669040FR	495
LM669040IT	495
LM75042TP33	208
LM75044TP33	208
LM75059TP33	208
LMC0038.300	73
LMC0038.400	73
LMC13.100	121
LMC13.200	121
LMC13.300	121
LMC36GPK12.200	272
LMC36GPK21.200	292
LMC36GPK21C.400	296
LMC36GPPK11CF.400	280
LMC36GPPK11F.200	276
LMC36GPPK12.200	270
LMC36GPPK21.200	284
LMC36GPPK21C.400	288
LMC36GPPK21CF.400	304
LMC36GPPK21F.200	300
LMCA065.100	74
LMCA065.150	74
LMCA065.200	74
LMCA065.300	74
LMCA065.400	74
LMCA065.600	74
LMCC065.100	75
LMCC065.150	75
LMCC065.200	75
LMCC065.300	75
LMCC065.400	75
LMCC065.600	75
LMDMP070Z	123
LMDMP100Z	123
LMDMP070ZKIT	122
LMDMP100ZKIT	122
LMGF	122
LMGF13-POM	125
LMGF15	309
LMGW	258
LMGWF200	232
LMGWF300	232
LMGWF400	236
LMGWI.B200	255
LMGWI.B300	255
LMGWI.B400	255
LMGWI.B600	255
LMGWI200	248
LMGWI300	248
LMGWI400	252
LMGWS200	224
LMGWS300	224
LMGWS400	228
LMGWSB200	254
LMGWSB300	254
LMGWSB400	254
LMGWSB600	254
LMGWSI200	240
LMGWSI300	240
LMGWSI400	244
LMGWSIB200	254
LMGWSIB300	254
LMGWSIB400	254
LMGWSIB600	254
LMGWST01	256
LMINT-AM11	78
LMINT-AM22	73
LMINT-GT915	80
LMINT-PCOV30.100	68
LMINT-PCOV30.150	68
LMINT-PGUA30.100	68
LMINT-PGUA30.150	68
LMINT-VFIX30.100	69
LMINT-VFIX30.150	69
LMP6511P.200	90
LMP6511P.300	90
LMP6511CP.400	94
LMP6511CFP.400	102
LMP6511FP.200	98
LMP6511FP.300	98
LMP6521P.200	106
LMP6521P.300	106
LMP6521CP.400	110
LMP6521CFP.400	118
LMP6521FP.200	114
LMP6521FP.300	114
LMPERNOD	496
LMPERNOF	496

Art.	Page
LMPERNOI	496
LMPIA01	496
LMPIA02	496
LMPS-PSD62	123
LMPS-STP55	122
LMSIN-2AC11	80
LMSIN-2AC170	213
LMSIN-2AC500	213
LMSIN-2AT21	80
LMSIN-2AT502	212
LMSIN-3AT31	80
LMSIN-3AT503	213
LMSIN-AC55	123
LMSINCRO	258
LMSIN-GA55	123
LMT6511.200	30
LMT6511.300	30
LMT6511C.400	34
LMT6511CF.400	42
LMT6511F.200	38
LMT6511F.300	38
LMT6512.300	46
LMT6512F.300	50
LMT6513.400	54
LMT6513F.400	58
LMT6521.200	62
LMT6521.300	62
LMT6521.400	66
LMTAS	79
LMTCUT	81
LMTCUTDR	81
LMU20.100	121
LMU20.150	121
LMU20.300	121
LMU20TP	121
LMV10011.200	138
LMV10011.300	138
LMV10011C.400	146
LMV10011CF.400	158
LMV10011F.200	152
LMV10011F.300	152
LMV10012.300	162
LMV10012F.300	166
LMV10013.400	170
LMV10013F.400	174
LMV10021.200	182
LMV10021.300	182
LMV10021C.400	190
LMV10021CF.400	202
LMV10021F.200	196
LMV10021F.300	196
LMV3111.200	134
LMV3111.300	134
LMV3111C.400	142
LMV3121.200	178
LMV3121.300	178
LMV3121C.400	186
LMV7511.200	136
LMV7511.300	136
LMV7511C.400	144
LMV7511CF.400	156
LMV7511F.200	150
LMV7511F.300	150
LMV7521.200	180
LMV7521.300	180
LMV7521C.400	188
LMV7521CF.400	200
LMV7521F.200	194
LMV7521F.300	194
LOGS10D	491
LOGS10U	491
M107	533
M135	533
MABDQ40	614
MABDT40	614
MAL6036	617
MAL6050	617
MAN30A	618
MAN30C	618
MAN400V160	608
MAN400V320	608
MAN400V448	608
MAN401V160	609
MAN401V320	609
MAN401V448	609
MAN404V160	610
MAN404V320	610
MAN404V448	610
MAN408V160	611
MAN408V320	611
MAN408V448	611
MAN40A	618
MAN40C	618
MAN412V250	609
MAN412V350	609
MAN414V250	610
MAN414V350	610
MAN500V150	611
MAN60A	619
MAN60C	619
MAP101	580
MAP101-BOLT	580
MAP103	580
MAP105	581
MAP107	581
MAP109	581
MAP111	581
MAP113	582
MAP114	582
MAP115	583
MAP116	583
MAP117	583
MAP119	583
MAP121	583
MAP123	582
MAP125	582
MAP127	582
MAP-A220	568
MAP-A220MDX	569
MAP-A220MSX	569
MAP-A320	568
MAP-A320MDX	569
MAP-A320MSX	569
MAP-B220	570
MAP-B220MDX	571
MAP-B220MSX	571
MAP-B320	570
MAP-B320MDX	571
MAP-B320MSX	571
MAP-BASE	566
MAP-BASEMDX	567
MAP-BASEMSX	567
MAP-C220	572
MAP-C220MDX	573
MAP-C220MSX	573
MAP-C320	572
MAP-C320MDX	573
MAP-C320MSX	573
MAP-E220	574
MAP-E220MDX	575
MAP-E220MSX	575
MAP-E320	574
MAP-E320MDX	575
MAP-E320MSX	575
MAP-F220	576
MAP-F220MDX	577
MAP-F220MSX	577
MAP-F320	576
MAP-F320MDX	577
MAP-F320MSX	577
MAP-G220	578
MAP-G220MDX	579
MAP-G220MSX	579
MAP-G320	578
MAP-G320MDX	579
MAP-G320MSX	579
MAQ40	615
MAQ60	615
MAT40	615
MAT4314	616
MAT4320	616
MAT60	615
MAT6314	616
MAT6320	616
MAT8314	617
MAT8320	617
MFM14025	81
MN1620	600
MN2020	600
MN2030	624
MN251200	601
MN25300	600
MN25400	600
MN25500	600
MN25800	600
MN25850	601
MNQ2470	624
MNQL25300	607
MNQL25400	607
MNQLAC25300	607
MNQLAC25400	607
MNTL25300	606
MNTL25400	606
MNTLAC25300	606
MNTLAC25400	606
MSC5	622
MSC6	623
MSC7	622
MSC8	623
MSC9	619
PBA200CK	594
PBA200CKQ	594
PBA200CSK	594
PBA200QV01	587
PBA200QV01/D	587
PBA200QY02	588
PBA200QY04	588
PBA200QY04/A	588
PBA200QY06/A	588
PBA200Y002	590
PBA200Y004	590
PBA200Y004/A	590
PBA200Y006/A	590
PBA200YA02	592
PBA200YA04	592
PBA200YA04/A	592
PBA200YA06/A	592
PBA71	595
PBA911	595
PBAAD81	595

Art.	Page
PBAAS11	595
PBD3183	256
PBD3183.150	256
PBD3183.220	256
PD001	430
PD002	430
PD003	455
PD12	430
PD148RKIT10D	424
PD148RKIT10SC	424
PD148RKIT10U	424
PD148RKIT12D	424
PD148RKIT12SC	424
PD148RKIT12U	424
PD148SKIT10D	420
PD148SKIT10SC	420
PD148SKIT10U	420
PD148SKIT12D	420
PD148SKIT12SC	420
PD148SKIT12U	420
PD4RKIT10D	422
PD4RKIT10SC	422
PD4RKIT10U	422
PD4RKIT12D	422
PD4RKIT12SC	422
PD4RKIT12U	422
PD4SKIT10D	418
PD4SKIT10SC	418
PD4SKIT10U	418
PD4SKIT12D	418
PD4SKIT12SC	418
PD4SKIT12U	418
PD8A	430
PDKIT02	428
PDKIT05	428
PDMUR66	431
PFDOOR66	429
PFDOOR6615	429
PFDOOR6630	429
PFDOOR810	429
PFDOOR81015	429
PFDOOR81030	429

Art.	Page
PFDOORCUT	431
PH2792	417
PH2819	417
PH2828	417
PH50508	416
PH50510	416
PH50511	416
PH50512	416
PH9113	417
PH9117	417
PH9121	417
PI07	497
PIVAN01	519
PIVAN04	519
PIVAN05	519
PIVAN08	519
PIVOTB002	463
PIVOTB004	463
PIVOTB006	464
PIVOTB008	464
PIVOTB010	465
PIVOTS011	465
PIVOTS014	465
PM1	605
PM2	605
PM3	605
PM4	605
PMAN1131	602
PMAN1322	603
PMAN1332	603
PMAN1340	603
PMAN1530	604
PMAN90	602
POM01	629
POM02	629
POM03	629
POM04	629
POM1ACC20	626
POM1ACC25	626
POM2525	629
POM4535	627
POM45PT	629

Art.	Page
POM45S	631
POM45T	631
POM65S	630
POM65T	630
POM75	630
POM8	510
POM90540T	631
POM90555T	631
POMBD40S	631
POMBD40T	631
POMPVC	630
POMVE20S	631
POMVE20T	631
POMVE25S	631
POMVE25T	631
POMVE30S	631
POMVE30T	631
PROALUX1520	402
PROALUX1530	402
PROALUX1720	402
PROALUX1730	402
PROALUX1920	403
PROALUX1930	403
PROALUXG	403
PROALUXG400	403
PROFALL0820	400
PROFALL1020	400
PROFALL1225	400
PROFALL1240	400
PROFALL1425	400
PROFALL1440	400
PROFIX1630	392
PROFIX1660	392
PROFIX1830	398
PROFIX1860	398
PROFIX2130	392
PROFIX2160	392
PROFIX2230	398
PROFIX2260	398
PROFIX2430	394
PROFIX2460	394
PROFIX2530	399

Art.	Page
PROFIX2560	399
PROFIX3030	394
PROFIX3060	394
PROFIX4125	393
PROFIX4272	393
PROFIXG	399
PROFIXTP18	399
PROFIXTP22	399
PROFIXTP25	399
PROFIXTPU	393
PROFIXTPU810	395
PROTAP0820	400
PROTAP1020	400
PROTAP1225	400
PROTAP1240	400
PROTAP1425	400
PROTAP1440	400
PROTAP1520	403
PROTAP1530	403
PROTAP1720	403
PROTAP1730	403
PROTAP1920	403
PROTAP1930	403
PS03	497
R7150	405
R7166	405
R7166FORO	405
R7170	405
R7170FORO	405
REGTERGUA	77
RMA1319	407
RMA1373	406
RMA1382	406
RMA1390	406
S1201CORP	528
S1203CORP	528
S1205KCORP	529
S1207KCORP	529
S1209	530
S1211	530
S1213	530
S1215	530

Art.	Page
S1217U	491
S1219	530
S1221	530
S1223	530
S1227	527
S1228	527
S1229	527
S1231	527
SERH01	550
SERH03	550
SERH05	550
SERH07	550
SERH09	550
SERH11	550
SERH13	550
SERH15	551
SERH17	538
SERMF13	552
SERMF15	552
SERMFGL1	553
SERMG10P	315
SERMG10S	315
SERMG10SU	315
SERMG12	317
SERMG19	317
SERMGC1	315
SERMGM10P	316
SERMGM10S	316
SERMGM10SU	316
SERMYC1	516
SERMYC300	516
SERMYC308	516
SERMYC310	516
SERMYC312	516
SERMYL	516
SERMYMP	515
SERMYMS	515
SERMYMSU	515
SERMYP	515
SERMYS	515
SERMYSU	515
SEROYC	511

Art.	Page
SEROYP	511
SEROYS	511
SEROYSD	511
SERSD610P	310
SERSD610S	310
SERSD610SU	310
SERSD620	310
SERSD915P	385
SERSD915S	385
SERSD915SU	385
SERSD941	385
SGS15L	485
SGS17L	485
SGS2115D	484
SGS2115U	484
SGS2117D	484
SGS2117U	484
SGS2121D	484
SGS2121U	484
SGS21L	485
SGS2315MD	484
SGS2315MU	484
SGS2317MD	484
SGS2317MU	484
SGS2321MD	484
SGS2321MU	484
SGS2715M	485
SGS2717M	485
SGS2721M	485
SP2255	628
SP2255GD	628
SP255	627
SPC501	509
SPC503	509
SPC507	510
SPC509	510
SPH100	411
SPH102	412
SPH104	412
SPH106	412
SPH108	412
SPH110	414

Art.	Page
SPH112	415
SPH114	414
SPH2	509
SR118CORP	526
SR119CORP	525
SR119M	533
SR1220CORP	525
SR1224	527
SRC118	527
SRS1180CORP	526
STL02CORP	531
STL04CORP	531
STL05	532
STL06CORP	531
STL07	532
STPDX	337
STPSX	337
SX-BT903	506
SX-BTKIT	505
SX-BTUP1	507
SX-BTUP3	506
SX-BTUP5	507
SX-JS1053DE	503
SX-JS1053FR	503
SX-JS1053IT	503
SX-JS1054DE	503
SX-JS1054FR	503
SX-JS1054IT	503
SX-JS903DE	503
SX-JS903FR	503
SX-JS903IT	503
SX-JS903PMRDE	503
SX-JS903PMRFR	503
SX-JS903PMRIT	503
SX-JS904DE	503
SX-JS904FR	503
SX-JS904IT	503
SX-JS905DE	503
SX-JS905FR	503
SX-JS905IT	503
TS250065	125
TS250125	125

Art.	Page
TS250155	125
UT200	345
UT250	365
UT300	337
UTC200R	345
UTC250R	365
UTC300R	337
UTR65	399
VETCIL35	627
VIT7981-4.8X38-ZN	78
VIT7981-4.8X60-ZN	78
VIT965-3X8-ZN	307
YC300	516
YC308	516
YC310	516
YC312	516
ZATT	599
ZMMS1400	585
ZMMS1400U	585
ZMT/A	596
ZMT1400	596
ZMT2000	596
ZMT400	596
ZMT500	596
ZMT800	596
ZPI/A	598
ZPI500	598
ZPI800	598
ZQUA/A	597
ZQUA1400	597
ZQUA500	597
ZQUA800	597
ZSIP/A	598
ZSIP500	598
ZSIP800	598
ZSIQ/A	597
ZSIQ1400	597
ZSIQ500	597
ZSIQ800	597
ZSIT/A	596
ZSIT1400	596
ZSIT2000	596

Art.	Page
ZSIT400	596
ZSIT500	596
ZSIT800	596
ZSS1400	585
ZSS1400U	585
ZUV	599

This PDF version of the **Volume 3 CAT24_VOL3_V4_EN** has been updated compared to previous versions with some changes which we report below for completeness of information.

• CAT24_VOL3_V1_EN 15/11/2023

• CAT24_VOL3_V2_EN 19/02/2024
Pag. 39, 47, 99, 103, 115, 119: modified formulas of the door panel
Page 174: correct description LM3V112.400
Page 179, 187: modified door section and formula Hg
Page 365, 374 : code GLMSTOPDX/SX modified dimension
Page 600 code MN25800: modified dimensions L and I.

• CAT24_VOL3_V3_EN 01/07/2024
Pag. 30-203: added QR-codes for connection to digital manuals and videos, added and corrected some useful dimensions for the drawing.
Pag. 30, 34, 46, 54, 62, 66: the max LM FRAME passage lights have been modified by default up to a maximum of 85mm.
Pag. 35, 43, 51, 55, 59, 67, 68, 69: improved door width formulas.
Pag. 63, 67: modified track position compared to the opening and updated Hg formula on the new position.
Pag. 90, 94, 106, 110: the max LM DOOR dimensions increased by 40 mm.
Pag. 90-123: Added a guide for orders for dampers for LM PORTA systems.
Pag. 134-190: increased the max LM VETRO passage lights up to a maximum of 150 mm.
Pag. 151, 153, 157, 159, 167, 175, 201: improved door width formulas LM VETRO.
Pag. 163, 167, 171, 175: improved door height formulas LM VETRO.
Pag. 194-202: modified the max passage lights by 20 mm LM VETRO.
Pag. 224, 228, 240, 244: increase the max passage lights by 40 mm LM INVISIBLE.
Pag. 280, 304 change the max passage lights by 10 mm LM CLIPO.
Pag. 311, 312, 313: modified the width art. DQS25, DQS23, DQS21.
Pag. 322, 386: art. 057.3080.001 e .002 modified colour.
Pag. 357: modified end quota for glass processing “40”.
Pag. 402: modified last article code on the page.
Pag. 450: revised diagram for ORDER FORM.
Pag. 490: modified last article code on the page.
Pag. 497: added technical information for PS03 and PI07
Pag. 507: art. SX-BTUP5 modified glass cut-out.
Pag. 509, 510: switched the codes SPC503 – SPC507.
Pag. 607 modified quota “I” for art. MNQL25300 – MNQL25400.
Pag. 631: modified heading from “PAIR OF KNOBS” to “KNOB” for art. POMVE20 – POMVE25 – POMVE30.

• CAT24_VOL3_V4_EN 07/04/2025
Pag. 82 – 123: Revised LM PORTA PRO sliding system with new sliding clamps
Pag.323: Ref.GSLS217- Correct packaging description
Pag. 527: Ref. S1227, S1229, S1231: updated technical drawing
Pag. 530: Ref. S1219, S1221, S1223: updated technical drawing

The information provided is for information purposes only.
Saint-Gobain Logli S.r.l. reserves the right to make changes of any nature at any time to one or more products, or to cease their production. The General Terms of Sale can be found in the catalogue.

Saint-Gobain Logli S.r.l.
Via Chemnitz, 49/51
59100 Prato - Italy
www.sg-logli.it